chanhvinh.com

Automotive Ethernet
Common Mode Choke for 1000Base-T1

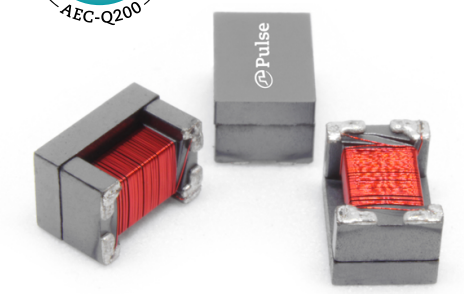

- *Meet IEEE802.3bp and OA TC3 v2.0 Requirements*
- *Approved by major Automotive OEMs*
- *Meets AEC-Q200 Requirement*
- *PPAP capable*
- *Tested with leading PHY partners*
- *Operating Temperature: - 40°C to +125°C*
- *Factory IATF-16949 Certified*
- *Patented Technology*
- *Open Alliance TC3 test report available*

Electrical Specifications 25°C

Part Number	Insertion Loss (dB MAX)		Return Loss (dB MIN)			Common Mode Rejection (dB MIN)				Differential to Common Mode Rejection (dB MIN)			
	10-100MHz	100-400MHz	30-80MHz	200MHZ	400MHz	30-80MHz	200MHz	400MHz	1000MHz	1-30 MHz	100 MHz	200 MHz	1000 MHz
AE5002	-1	-1.7	-22	-17	-15	-45	-35	-32	-25	-60	-47	-40	-38

Part Number	Insertion Loss (dB MAX)			Return Loss (dB MIN)			Common Mode Rejection (dB MIN)			Differential to Common Mode Rejection (dB MIN)	
	20MHz	100MHz	400MHZ	30-80MHz	200MHZ	600MHz	10MHz	30-200MHZ	600MHz	1-80 MHz	600 MHz
AE1210	-0.5	-0.7	-1	-27	-22	-19	-23	-42	-15	-65	-47.5

Notes:
1. DCR per winding is 5.0mOHms for AE2002 and 3.5mOhms for AE0100
2. Imax for both parts is 100mA
3. Voltage rating for both parts is 60V Max

Mechanicals

AE5002

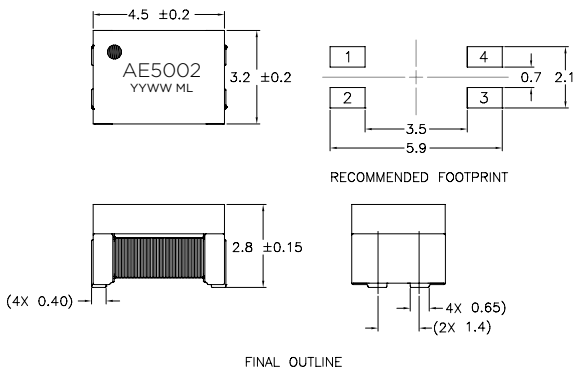

AE1210

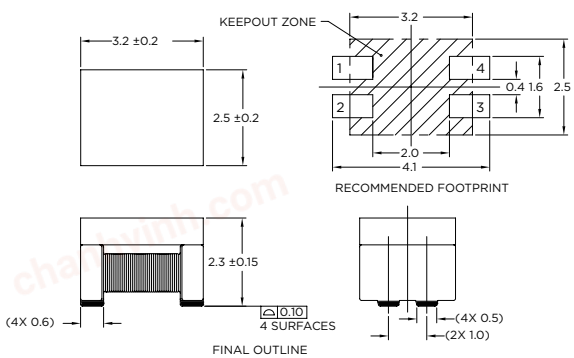

Schematic

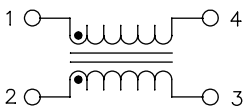

Dimensions: Inches (mm)
Unless otherwise specified, all tolerances are ± .010 (0.25)

chanhvinh.com

Impedance Plot

AE5002

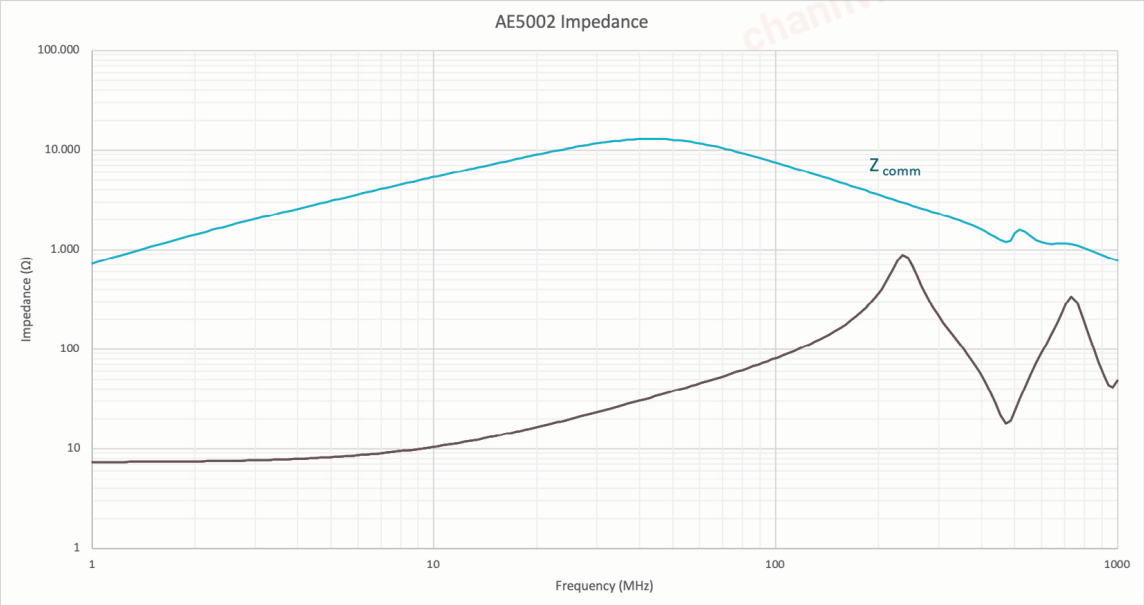

AE1210

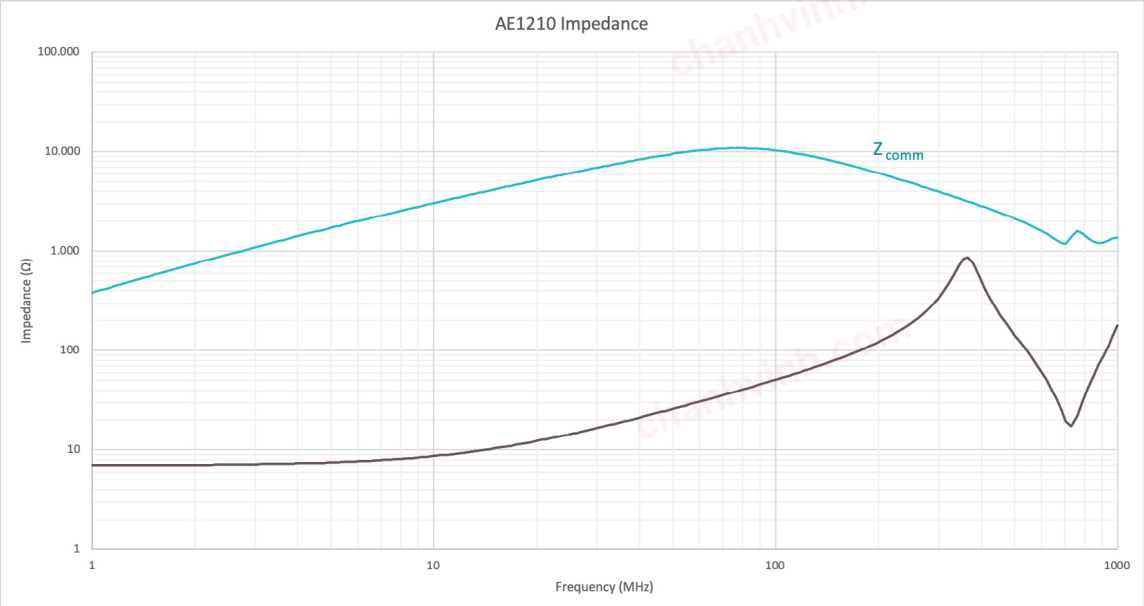

chanhvinh.com

Tape & Reel

AE5002 / AE1210

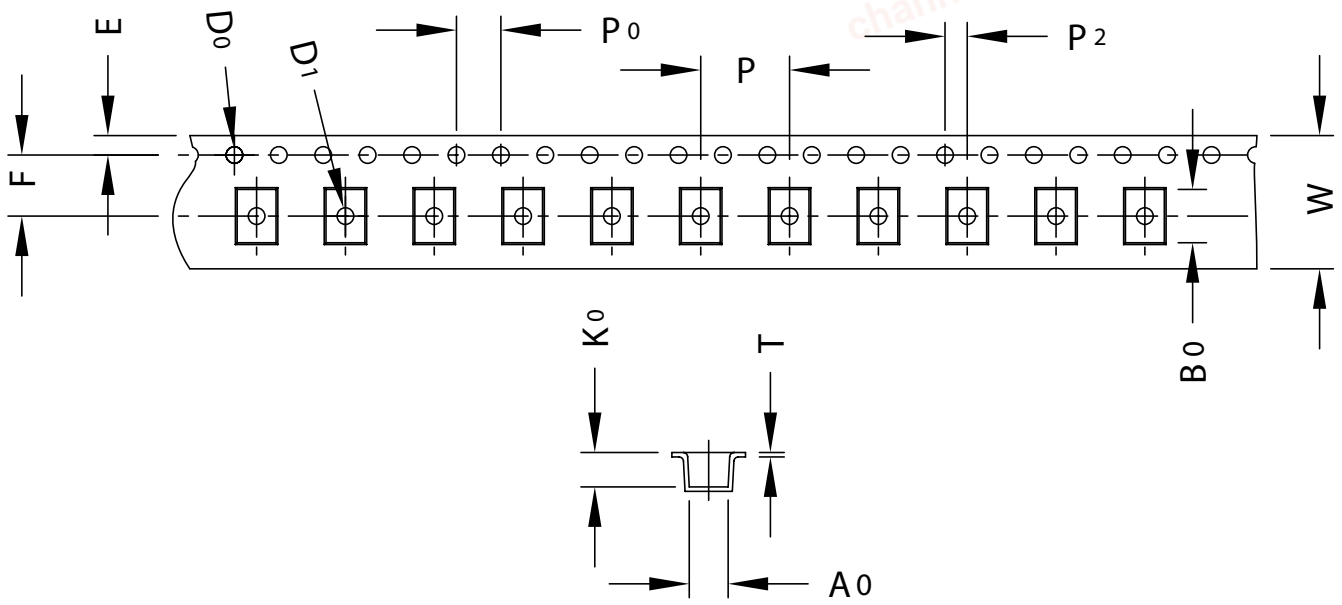

Dim Chart												
Item	W	A_0	B_0	K_0	P	F	E	D_0	D_1	P_0	P_2	T
AE5002	12.00 ±0.30	3.5 ±0.10	4.8 ±0.10	3.1 ±0.10	8.00 ±0.10	5.50 ±0.10	1.75 ±0.10	1.50 $^{+0.10}_{-0.00}$	1.50 $^{+0.10}_{-0.00}$	4.00 ±0.10	2.00 ±0.10	0.40 ±0.05
AE1210	12.00 ±0.30	2.7 ±0.10	3.5 ±0.10	2.6 ±0.10	4.00 ±0.10	5.50 ±0.10	1.75 ±0.10	1.50 $^{+0.10}_{-0.00}$	1.50 $^{+0.10}_{-0.00}$	4.00 ±0.10	2.00 ±0.10	0.40 ±0.05

For More Information:

Americas - prodinfo_network_americas@yageo.com | **Europe -** prodinfo_network_emea@yageo.com | **Asia -** prodinfo_network_asia@yageo.com

Performance warranty of products offered on this data sheet is limited to the parameters specified. Data is subject to change without notice. Other brand and product names mentioned herein may be trademarks or registered trademarks of their respective owners. © Copyright, 2025. Pulse Electronics, Inc. All rights reserved.

YAGEO Corporation and its affiliates do not recommend the use of commercial or automotive grade products for high reliability applications or manned space flight.