chanhvinh.com

Power Inductor
Automotive Grade
ADCC Series

Overview

The miniature power inductor with a special L-shape of external termination.
For the ADCC series, which are the AEC-Q200-qualified, automotive equivalent parts suitable for ADAS and Infotainment applications.
ADCC series can help improve the system efficiency and achieve a small form factor despite multi-phased outputs. Moreso, this product is specially designed for customer's use-cases that don't utilize an external termination on the top of the inductor.

Benefits

1. Automotive grade available
2. Energy Storage, Efficiently stores and transfers energy in DC-DC converters and power supplies.
3. L-shape of external termination.
4. Compact and Efficient Design, Advanced materials and construction enable miniaturization without sacrificing performance, ideal for space-constrained designs.

Applications

1. Automotive Systems for ADAS, infotainment, Head-up Displays (HUD)
2. Telematic Control Units(TCU)
3. Sensing ECUs for Cameras, Radar

Product Information

Series	L (mm)	W(mm)	T (mm)	Inductance (μH)
ADCC	2.0	1.6	1.2	0.15 ~ 2.2
	2.5	2	1.2	

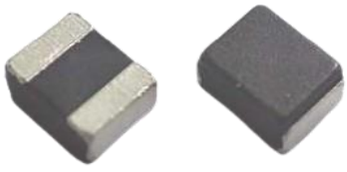

chanhvinh.com

ADCC00201612 Series Specification

AEC-Q200

1 Scope:

This specification applies to Molding power inductors

2 Part Numbering:

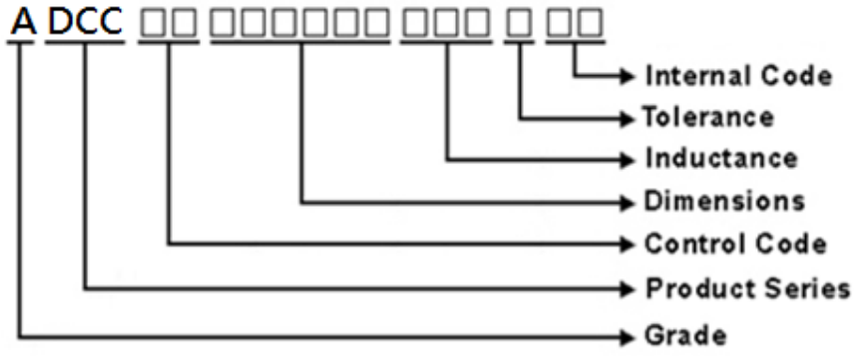

3 Rating:

Operating Temperature: - 40℃ ~125℃(Including self-temperature rise)

4 Marking:

No Marking

5 Standard Testing Condition

	Unless otherwise specified	In case of doubt
Temperature	Ordinary Temperature(15 to 35℃)	20 to 30℃
Humidity	Ordinary Humidity(25 to 85% RH)	50 to 80 %RH

chanhvinh.com

ADCC00201612 Series Specification

AEC-Q200

6 Configuration and Dimensions:

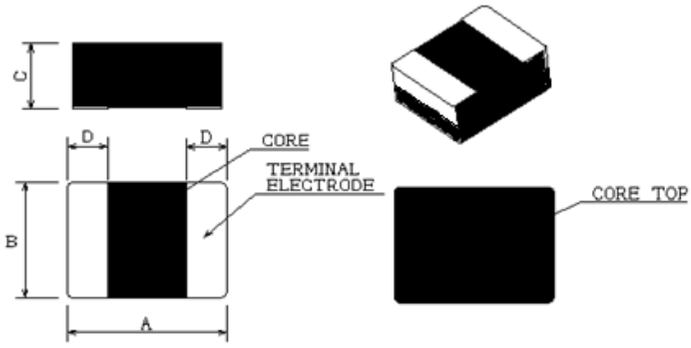

Dimensions in mm

TYPE	201612
A	2.0±0.2
B	1.6±0.2
C	1.2 Max
D	0.6±0.3

Net Weight (grms)

Size Code	Net Weight (grms)
201612	≒0.0244

7 Electrical Characteristics:

Part No.	Inductance (uH)	Tolerance (±%)	Test Freq.	Irms(A) Max.(Typ)	Isat(A) Max.(Typ)	RDC(mΩ) Max.(Typ)
ADCC00201612R15MC1	0.15	20	2MHz,1V	5.5(6.9)	7.7(8.6)	16(10)
ADCC00201612R24MC1	0.24	20	2MHz,1V	5.0(6.2)	5.9(6.5)	21(16)
ADCC00201612R33MC1	0.33	20	2MHz,1V	4.3(4.8)	5.2(5.8)	27(22)
ADCC00201612R47MC1	0.47	20	2MHz,1V	3.9(4.5)	4.5(5.0)	30(24)
ADCC002016121R0MC1	1.00	20	2MHz,1V	3.1(3.4)	3.3(3.7)	50(43)
ADCC002016121R5MC1	1.50	20	2MHz,1V	2.3(2.6)	2.5(2.8)	95(90)

NOTE:

1.Operating temperature range -40℃~125℃(Including self - temperature rise)

2.Isat for Inductance drop 30% from its value without current.

3.Irms for a 40℃ temperature rise from 25℃ ambient.

4.All test data is referenced to 25℃ ambient

5.Absolute maximum voltage 20VDC

6. Rated current: Isat or Irms, whichever is smaller

chanhvinh.com

ADCC00201612 Series Specification

AEC-Q200

8 ADCC00201612Series

8.1 Construction:

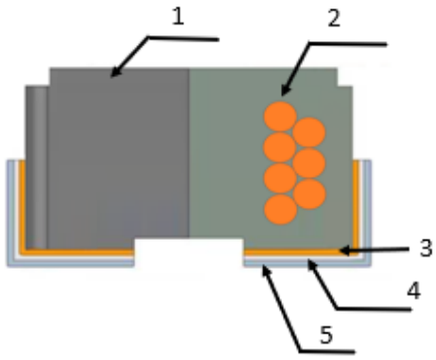

8.2 Material List:

ITEM	PART	DESCRIPTION
1	Core	Metal Powder
2	Wire	Copper wire
3	Terminal	Cu
4		Ni
5		Sn

chanhvinh.com

ADCC00201612 Series Specification

AEC-Q200

9 Reliability Of Molding power inductors

1-1.Mechanical Performance

No	Item	Specification	Test Method
1-1-1	Board Flex	The forces applied on the right conditions must not damage the terminal electrode and the metal body	Refer to AEC-Q200-005 Test device shall be soldered on the substrate Substrate Dimension: 100x40x1.6mm Deflection: 2.0mm Keeping Time: 60sec 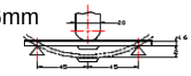
1-1-2	Terminal Strength Test	Appearance: No damage	Refer AEC-Q200-006 Soldered on PCB for testing as fig. Force : 1.8kg Keeping Time: 60 seconds. 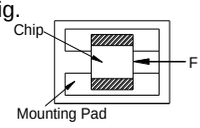
1-1-3	Solderability	Method B1: The electrodes shall be at least 95% covered with new solder coating Method D: No more than 5% of the solderable metalization exposed	Refer to J-STD-002 Precondition: Steam 93°C/ 100%RH, 8H a) Method B1 @ 245°C, 5+0/-0.5 s. b) Method D @ 260°C, 30+5/-0 s.
1-1-4	Resistance to Soldering Heat	Appearance: No damage Inductance: within ±20% of initial value	Refer to MIL-STD-202 Method 210 Test condition Condition K, time above 217°C, 60s – 150s, 3 heat cycles.
1-1-5	Resistance to Solvents	There must be no change in appearance or obliteration of marking.	Inductors must withstand 6 minutes of alcohol or water.
1-1-6	Mechanical Shock	The forces applied on the right conditions must not damage the terminal electrode and the ferrite.	Pulse shape：Half-sine waveform Impact acceleration：100g Pulse duration：6 ms Number of shocks：18 shocks (3 shocks for each face) Orientation：Bottom, top, left, right, front and rear faces
1-1-7	Vibration	Appearance: No damage Inductance change shall be within ±20%.	Refer MIL-STD-202 Method 204 Vibration waveform: Sine waveform Vibration frequency: 10Hz~2000Hz Vibration acceleration: 5g Sweep rate: 20 minutes/ cycle Duration of test: 12 cycles each of 3 orientations, 20 minutes for each cycle Vibration axes: X, Y & Z
1-1-8	Physical Dimensions	Product spec.	Verify physical dimensions to the applicable component detail specification

chanhvinh.com

ADCC00201612 Series Specification

AEC-Q200

9 Reliability of molding power inductors

1-2.Environmental Performance

No	Item	Specification	Test Method
1-2-1	Temperature Cycle*	Appearance: No damage Inductance:within±20% of initial value	Refer to JESD22 Method JA-104 Total cycles: 1000 cycles Temperature Cycling Test Conditions : -40 to +125 ℃ Soak Mode Condition : 30 minutes Measurement at 24±4 hours after test conclusion.
1-2-2	Operational Life*		Refer to MIL-STD-202 Method 108 Temperature: 125±3℃ (Include self-heat) Appliend Current : Rated Current Time: 1000± 24 hrs Measurement at 24±4 hours after test conclusion.
1-2-3	Biased Humidity Resistance*		Refer to MIL-STD-202 Method 103 Temperature: 85±2℃ Relative Humidity:85% / Time: 1000hrs Measurement at 24±4 hours after test conclusion.
1-2-4	High Temperature Exposure (Storage)		Refer to MIL-STD-202 Method 108 Temperature: 125±3℃ Time: 1000hrs Measurement at 24±4 hours after test conclusion.

*Sample should be preconditioned with three reflow passes (reference J-STD-020) before test.

chanhvinh.com

ADCC00201612 Series Specification

AEC-Q200

Reflow Profile

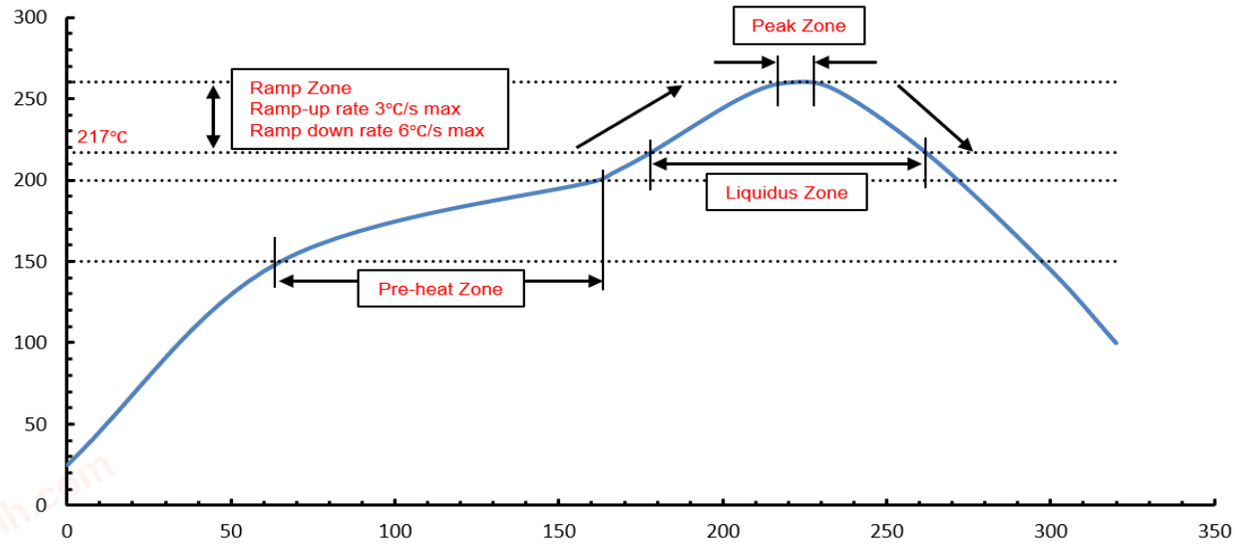

Refer to J-STD-020F

Profile Feature	Pre-heat Zone	Ramp-up Zone	Liquidus Zone	Peak Zone	Ramp-down Zone
Temperature	150~200℃	217℃~Tp	above 217℃	above 255℃	Tp~217℃
Time	60~120sec	---	60~150sec	<30sec	---
Rate	---	< 3℃/sec	---	---	< 6℃/sec

Note:

1. Tp<260℃
2. Time [25℃ to peak temperature] < 8 minutes
3. Reflow soldering must not be performed more than 3 times.
4. For superior solder joint connectivity results, soldering under standard nitrogen atmosphere is recommended.

chanhvinh.com

ADCC00201612 Series Specification

AEC-Q200

10 Packaging:

10.1 Packaging -Cover Tape

The force for tearing off cover tape is 10 to 100 grams in the arrow direction.

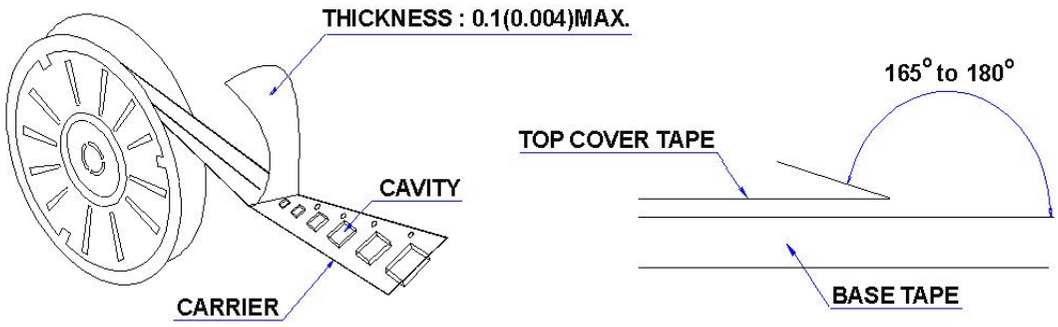

10.2 Packaging Quantity

TYPE	PCS/REEL
201612	3000

10.3 Reel Dimensions

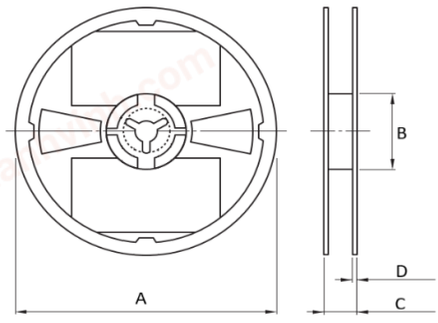

Dimensions in mm

TYPE	A	B	C	D
201612	178	60	12	1.5

chanhvinh.com

ADCC00201612 Series Specification

AEC-Q200

10 Packaging:

10.4 Tape Dimensions in mm

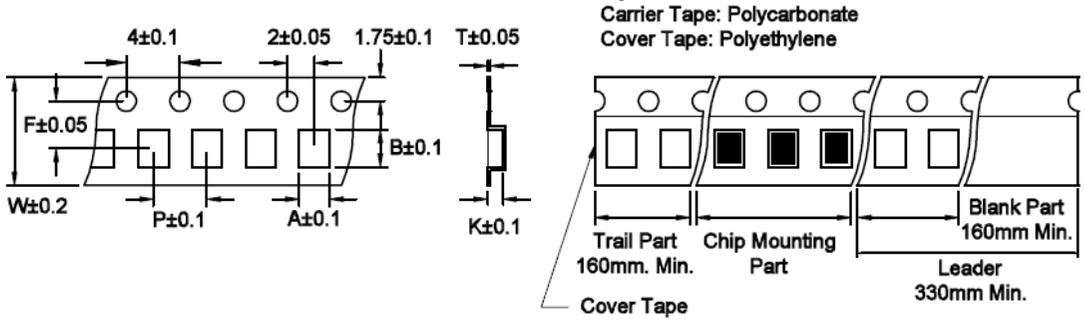

TYPE	A	B	T	W	P	F	K
201612	1.90	2.30	0.22	8	4	3.5	1.35

11 Recommended Land Pattern:

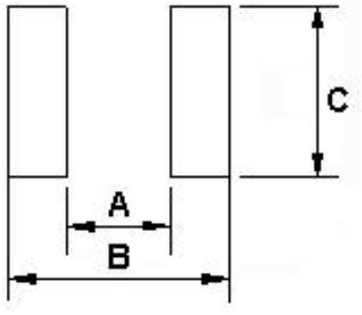

Dimensions in mm

TYPE	A	B	C
201612	0.7	2.3	1.8

12 Note:

1. The storage period is within 12 months. Products should be stored in the warehouse on the following condition: (Temperature: 5~40℃; Humidity: 20%~75%RH).
   Solderability should be checked if the period is exceeded.
2. Please make sure that your product has been evaluated and confirmed against your specifications when our product is mounted to your product.
3. Do not knock nor drop.
4. All the items and parameters in this product specification have been prescribed on the premise that our product is used for the purpose,under the condition and in the environment agreed upon between you and us. You are requested not to use our product deviating from such agreement.
5. Please keep the distance between transformer/coil and other components (refer to the standard IEC 950)

chanhvinh.com

YAGEO PULSE GROUP

ADCC00201612 Series Specification

AEC-Q200

13 Graph:

