chanhvinh.com

QH12TZ600Q
Qspeed™ Family

600 V, 12 A H-Series SiC Replacement Diode for Automotive

Product Summary

$I_{F(AVG)}$	12	A
$_{RRM}$	600	V
Q_{RR} (Typ at 125 °C)	30	nC
I_{RRM} (Typ at 125 °C)	2.2	A
Softness t_B/t_A (Typ at 125 °C)	0.65	

Pin Assignment

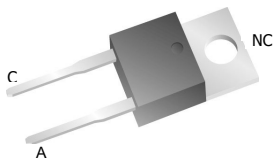

TO-220AC
QH12TZ600Q



RoHS Compliant
Package uses Lead-free plating and Green mold compound.
Halogen free per IEC 61249-2-21.

General Description

This device has the lowest Q_{RR} of any 600 V silicon diode. Its recovery characteristics increase efficiency, reduces EMI and eliminates snubbers. Replaces SiC diodes for similar efficiency performance in high switching frequency applications.

Applications

- Power Factor Correction boost diode in on-board charger
- Output rectifier of on-board charger

Features

- Low Q_{RR}, low I_{RRM}, low t_{RR}
- High dI_F/dt capable (1000 A / µs)
- Soft recovery
- AEC-Q101 qualified
- Fab, assembly and test certified to IATF 16949

Benefits

- Increases efficiency
  - Eliminates need for snubber circuits
  - Reduces EMI filter component size & count
- Enables extremely fast switching

Absolute Maximum Ratings

Absolute maximum ratings are the values beyond which the device may be damaged or have its useful life impaired. Functional operation under these conditions is not implied.

Symbol	Parameter	Conditions	Rating	Units
V_{RRM}	Peak repetitive reverse voltage	T_J = 25 °C	600	V
$I_{F(AVG)}$	Average forward current	T_J = 150 °C, T_C = 90 °C	12	A
I_{FSM}	Non-repetitive peak surge current	60 Hz, ½ cycle, T_C = 25 °C	100	A
I_{FSM}	Non-repetitive peak surge current	½ cycle of t = 28 µs Sinusoid, T_C = 25 °C	350	A
T_J	Operating junction temperature range		-55 to 150	°C
T_{STG}	Storage temperature		-55 to 150	°C
	Lead soldering temperature	Leads at 1.6 mm from case, 10 sec	300	°C
V_{ISOL}	Isolation voltage (leads-to-tab)	AC, TO-220	2500	V
P_D	Power dissipation	T_C = 25 °C	61	W

chanhvinh.com

Thermal Resistance

Symbol	Resistance from:	Conditions	Rating	Units
$R_{\theta JA}$	Junction to ambient	TO-220	62	°C/W
$R_{\theta JC}$	Junction to case		2.05	°C/W

Electrical Specifications at T_J= 25 °C (unless otherwise specified)

Symbol	Parameter	Conditions		Min	Typ	Max	Units
DC Characteristics							
I_R	Reverse current	V_R = 600 V, T_J = 25 °C		-	-	250	µA
		V_R = 600 V, T_J = 125 °C		-	0.6	-	mA
V_F	Forward voltage	I_F = 12 A, T_J = 25 °C		-	2.65	3.1	V
		I_F = 12 A, T_J = 150 °C		-	2.33	-	V
C_J	Junction capacitance	V_R = 10 V, 1 MHz		-	34	-	pF
Dynamic Characteristics							
t_{RR}	Reverse recovery time	dI/dt = 200 A/µs V_R = 400 V, I_F = 12 A	T_J = 25 °C	-	11.6	-	ns
			T_J = 125 °C	-	20.5	-	ns
Q_{RR}	Reverse recovery charge	dI/dt = 200 A/µs V_R = 400 V, I_F = 12 A	T_J = 25 °C	-	9.2	14	nC
			T_J = 125 °C	-	30	-	nC
I_{RRM}	Maximum reverse recovery current	dI/dt =200 A/µs V_R = 400 V, I_F = 12 A	T_J = 25 °C	-	1.27	1.8	A
			T_J = 125 °C	-	2.2	-	A
S	Softness factor = $\frac{t_B}{t_A}$	dI/dt = 200 A/µs V_R = 400 V, I_F = 12 A	T_J = 25 °C	-	0.6	-	
			T_J = 125 °C	-	0.65	-	

Note to component engineers: H-Series diodes employ Schottky technologies in their design and construction. Therefore, Component Engineers should plan their test setups to be similar to those for traditional Schottky test setups. (For additional details, see Application Note AN-300.)

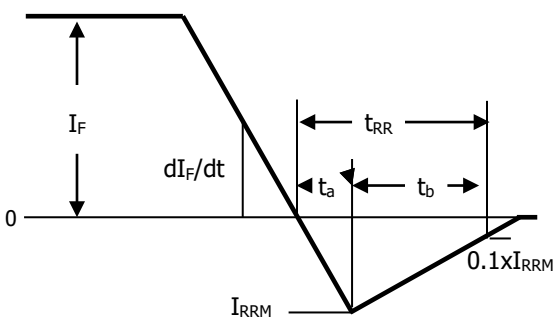

Figure 1. Reverse Recovery Definitions.

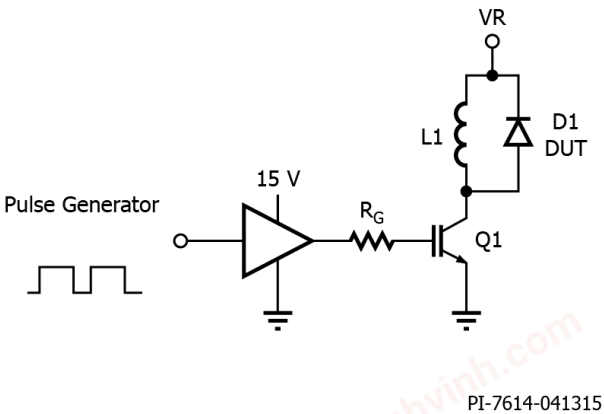

Figure 2. Reverse Recovery Test Circuit.

chanhvinh.com

Electrical Specifications at T_J= 25 °C (unless otherwise specified)

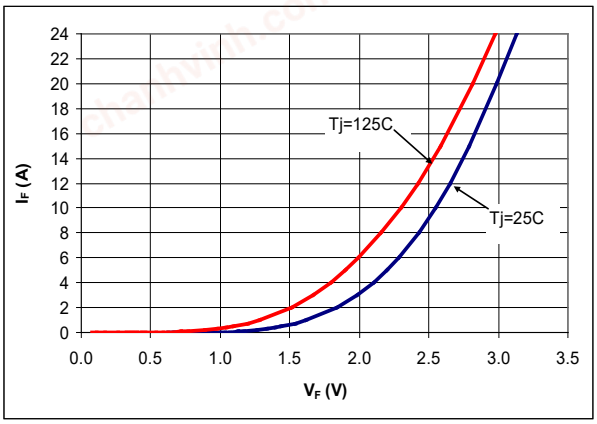

Figure 3. Typical I_F vs. V_F.

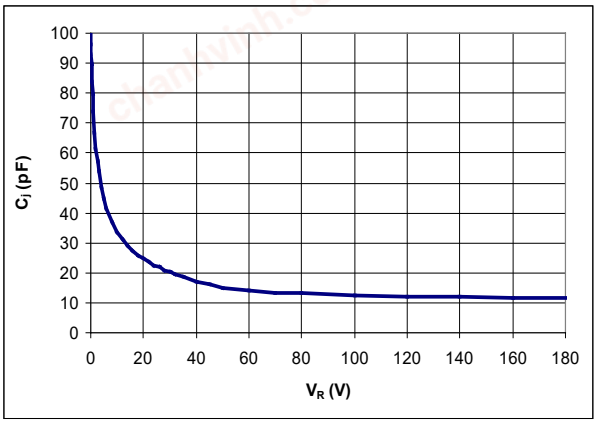

Figure 4. Typical C_J vs. V_R.

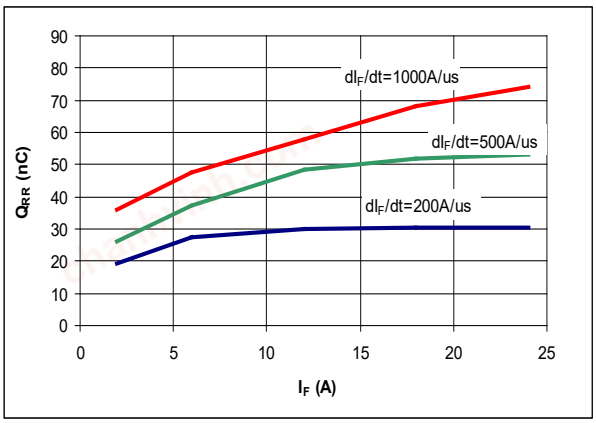

Figure 5. Typical Q_{RR} vs. I_F at T_J = 125 °C.

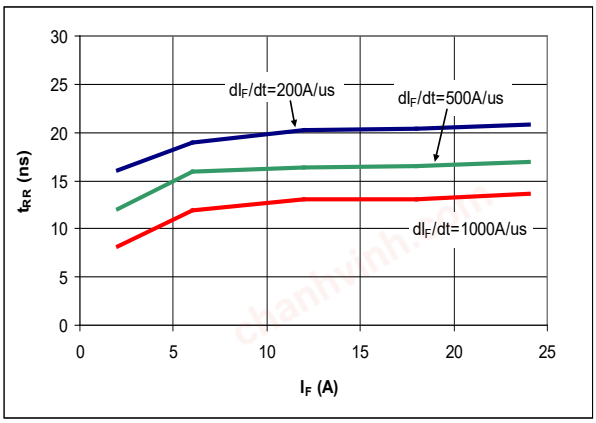

Figure 6. Typical t_{RR} vs. I_F at T_J = 125 °C.

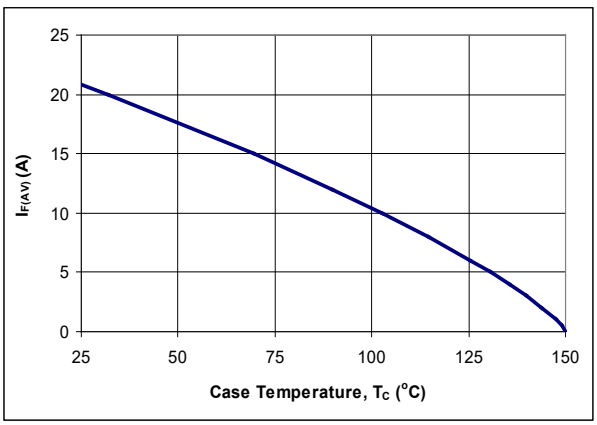

Figure 7. DC Current Derating Curve.

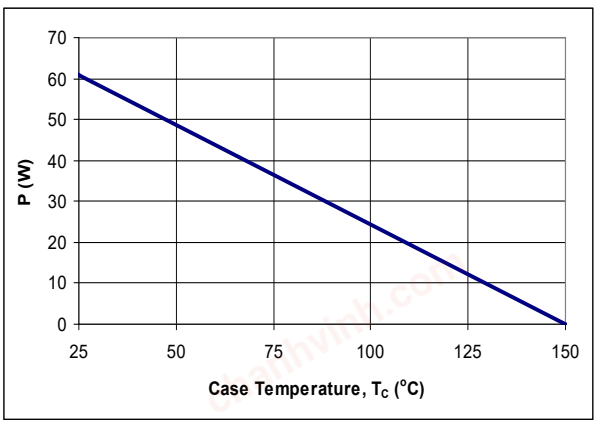

Figure 8. Power Derating Curve.

chanhvinh.com

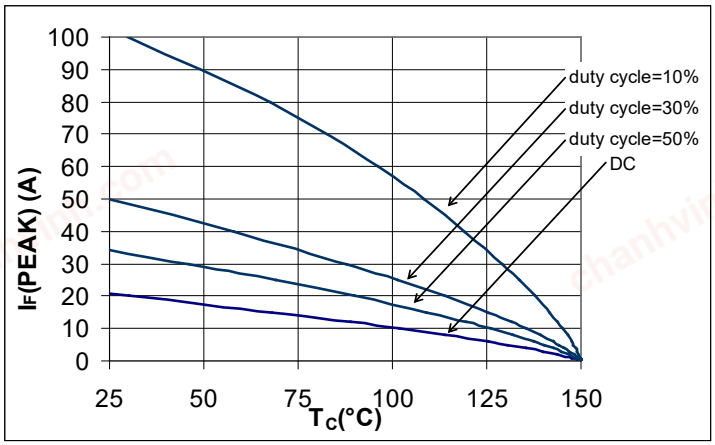

Figure 9. I_F(PEAK) vs. T_C, f = 70 kHz.

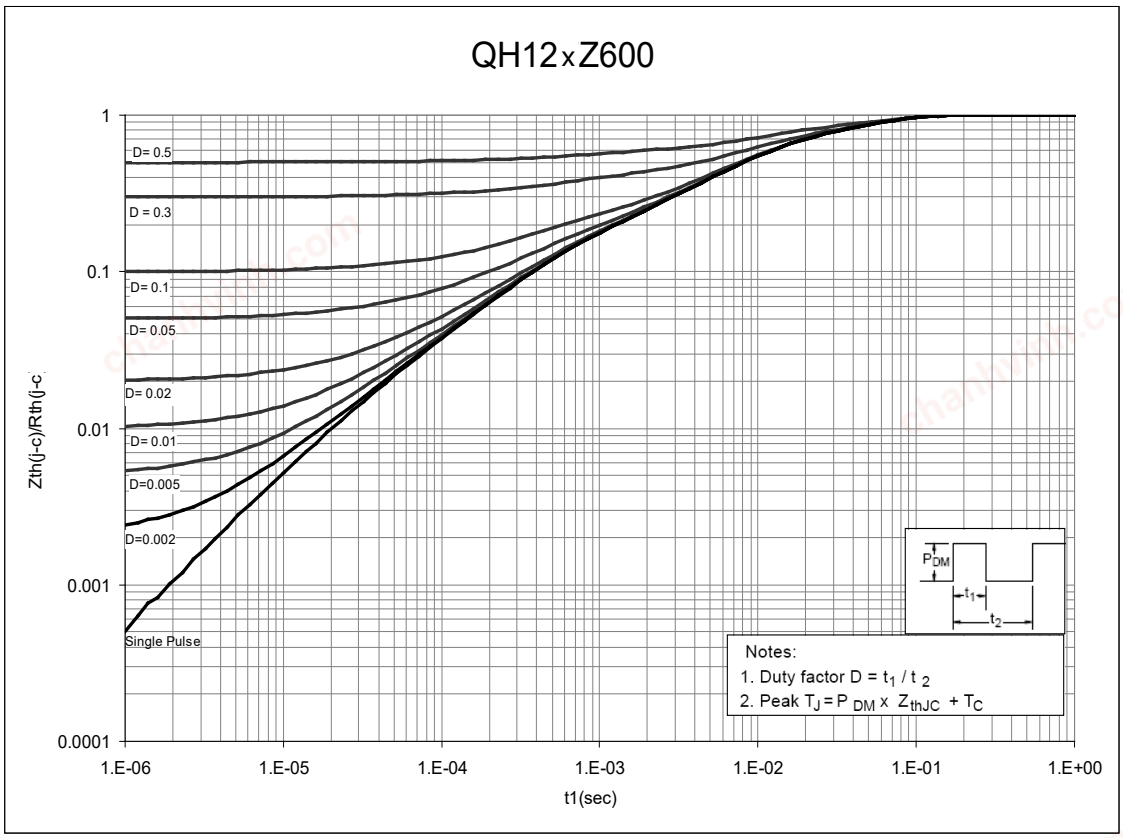

Figure 10. Normalized Maximum Transient Thermal Impedance.

chanhvinh.com

Dimensional Outline Drawings

TO-220AC

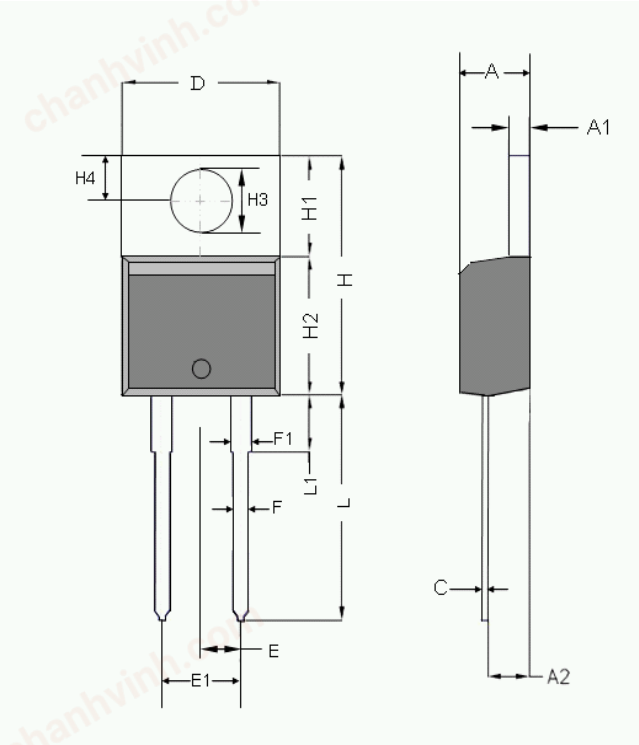

	Millimeters	
Dim	**MIN**	**MAX**
A	4.32	4.70
A1	1.14	1.40
A2	2.03	2.79
C	0.34	0.610
D	9.65	10.67
E	2.49	2.59
E1	4.98	5.18
F	0.508	1.016
F1	1.14	1.78
H	14.71	16.51
H1	5.84	6.795
H2	8.40	9.00
H3	3.53	3.96
H4	2.54	3.05
L	12.70	14.22
L1	-	6.35

Mechanical Mounting Method	Maximum Torque / Pressure specification
Screw through hole in package tab	1 Newton Meter (nm) or 8.8 inch-pounds (lb-in)
Clamp against package body	12.3 kilogram-force per square centimeter (kgf/cm^2) or 175 lbf/in^2

Soldering time and temperature: This product has been designed for use with high-temperature, lead-free solder. The component leads can be subjected to a maximum temperature of 300 °C, for up to 10 seconds. See Application Note AN-303, for more details.

Ordering Information

Part Number	Package	Packing
QH12TZ600Q	TO-220AC	50 units/tube

The information contained in this document is subject to change without notice.

chanhvinh.com

Revision	Notes	Date
1.0	Code A release.	01/21

chanhvinh.com

chanhvinh.com

For the latest updates, visit our website: www.power.com

Reference Designs are technical proposals concerning how to use Power Integrations' gate drivers in particular applications and/or with certain power modules. These proposals are "as is" and are not subject to any qualification process. The suitability, implementation and qualification are the sole responsibility of the end user. The statements, technical information and recommendations contained herein are believed to be accurate as of the date hereof. All parameters, numbers, values and other technical data included in the technical information were calculated and determined to our best knowledge in accordance with the relevant technical norms (if any). They may base on assumptions or operational conditions that do not necessarily apply in general. We exclude any representation or warranty, express or implied, in relation to the accuracy or completeness of the statements, technical information and recommendations contained herein. No responsibility is accepted for the accuracy or sufficiency of any of the statements, technical information, recommendations or opinions communicated and any liability for any direct, indirect or consequential loss or damage suffered by any person arising therefrom is expressly disclaimed.

Power Integrations reserves the right to make changes to its products at any time to improve reliability or manufacturability. Power Integrations does not assume any liability arising from the use of any device or circuit described herein. POWER INTEGRATIONS MAKES NO WARRANTY HEREIN AND SPECIFICALLY DISCLAIMS ALL WARRANTIES INCLUDING, WITHOUT LIMITATION, THE IMPLIED WARRANTIES OF MERCHANTABILITY, FITNESS FOR A PARTICULAR PURPOSE, AND NON-INFRINGEMENT OF THIRD PARTY RIGHTS.

Patent Information
The products and applications illustrated herein (including transformer construction and circuits' external to the products) may be covered by one or more U.S. and foreign patents, or potentially by pending U.S. and foreign patent applications assigned to Power Integrations. A complete list of Power Integrations' patents may be found at www.power.com. Power Integrations grants its customers a license under certain patent rights as set forth at http://www.power.com/ip.htm.

Power Integrations, the Power Integrations logo, CAPZero, ChiPhy, CHY, DPA-Switch, EcoSmart, E-Shield, eSIP, eSOP, HiperPLC, HiperPFS, HiperTFS, InnoSwitch, Innovation in Power Conversion, InSOP, LinkSwitch, LinkZero, LYTSwitch, SENZero, TinySwitch, TOPSwitch, PI, PI Expert, PowiGaN, SCALE, SCALE-1, SCALE-2, SCALE-3 and SCALE-iDriver, are trademarks of Power Integrations, Inc. Other trademarks are property of their respective companies. ©2021, Power Integrations, Inc.

Power Integrations Worldwide Sales Support Locations

WORLD HEADQUARTERS
5245 Hellyer Avenue
San Jose, CA 95138, USA.
Main: +1-408-414-9200
Customer Service:
Worldwide: +1-65-635-64480
Americas: +1-408-414-9621
e-mail: usasales@power.com

CHINA (SHANGHAI)
Rm 2410, Charity Plaza, No. 88,
North Caoxi Road,
Shanghai, PRC 200030
Phone: +86-21-6354-6323
e-mail: chinasales@power.com

CHINA (SHENZHEN)
17/F, Hivac Building, No. 2, Keji
Nan 8th Road, Nanshan District,
Shenzhen, China, 518057
Phone: +86-755-8672-8689
e-mail: chinasales@power.com

GERMANY (AC-DC/LED Sales)
Einsteinring 24
85609 Dornach/Aschheim
Germany
Tel: +49-89-5527-39100
e-mail: eurosales@power.com

GERMANY (Gate Driver Sales)
HellwegForum 3
59469 Ense
Germany
Tel: +49-2938-64-39990
e-mail: igbt-driver.sales@
power.com

INDIA
#1, 14th Main Road
Vasanthanagar
Bangalore-560052
India
Phone: +91-80-4113-8020
e-mail: indiasales@power.com

ITALY
Via Milanese 20, 3rd. Fl.
20099 Sesto San Giovanni (MI) Italy
Phone: +39-024-550-8701
e-mail: eurosales@power.com

JAPAN
Yusen Shin-Yokohama 1-chome Bldg.
1-7-9, Shin-Yokohama, Kohoku-ku
Yokohama-shi,
Kanagawa 222-0033 Japan
Phone: +81-45-471-1021
e-mail: japansales@power.com

KOREA
RM 602, 6FL
Korea City Air Terminal B/D,
159-6
Samsung-Dong, Kangnam-Gu,
Seoul, 135-728 Korea
Phone: +82-2-2016-6610
e-mail: koreasales@power.com

SINGAPORE
51 Newton Road,
#19-01/05 Goldhill Plaza
Singapore, 308900
Phone: +65-6358-2160
e-mail: singaporesales@power.com

1TAIWAN
5F, No. 318, Nei Hu Rd.,
Sec. 1
Nei Hu District
Taipei 11493, Taiwan R.O.C.
Phone: +886-2-2659-4570
e-mail: taiwansales@power.com

UK
Building 5, Suite 21
The Westbrook Centre
Milton Road
Cambridge
CB4 1YG
Phone: +44 (0) 7823-557484
e-mail: eurosales@power.com