chanhvinh.com

PLC-OSC- 5DC/ 24DC/ 2/ACT - Solid-state relay module

2980144

https://www.phoenixcontact.com/pc/products/2980144

Please be informed that the data shown in this PDF document is generated from our online catalog. Please find the complete data in the user documentation. Our general terms of use for downloads are valid.



PLC-INTERFACE for output functions, consisting of PLC-BSC.../ACT basic terminal block with screw connection and plug-in miniature solid-state relay, for mounting on DIN rail NS 35/7,5, 1 N/O contact, input: 5 V DC, output: 3 - 33 V DC/3 A

Your advantages

- Actuator connected directly to relay module
- No need for additional modular terminal blocks
- Efficient connection to system cabling using V8 adapter
- Time savings of up to 60 %
- Relay modules with safe isolation according to DIN EN 50178 between coil and contact
- Space savings of up to 80 %
- Functional plug-in bridges

Commercial data

Item number	2980144
Packing unit	10 pc
Minimum order quantity	1 pc
Sales key	08
Product key	DK6223
Catalog page	Page 376 (C-5-2019)
GTIN	4017918727499
Weight per piece (including packing)	38.318 g
Weight per piece (excluding packing)	35.738 g
Customs tariff number	85364900
Country of origin	DE

chanhvinh.com

PLC-OSC- 5DC/ 24DC/ 2/ACT - Solid-state relay module

2980144

https://www.phoenixcontact.com/pc/products/2980144

Technical data

Product properties

Product type	Solid-state relay module
Product family	PLC-INTERFACE
Application	Output function
Operating mode	100% operating factor

Insulation characteristics: Standards/regulations

Insulation	Basic insulation
Overvoltage category	III
Pollution degree	2

Data management status

Date of last data management	13.11.2024

Electrical properties

Maximum power dissipation for nominal condition	0.05 W
Test voltage (Input/output)	2.5 kV (50 Hz, 1 min., input/output)

Input data

Nominal input voltage U_N	5 V DC
Nominal voltage (plugged-in solid-state relay)	5 V DC
Input voltage range in reference to U_N	0.8 ... 1.2
Input voltage range	4 V DC ... 6 V DC
Switching threshold "0" signal in reference to U_N	≤ 0.25
Switching threshold "1" signal in reference to U_N	≥ 0.8
Typical input current at U_N	9.5 mA
Typical response time	20 µs (at U_N)
Typical turn-off time	300 µs (at U_N)
Operating voltage display	Yellow LED
Protective circuit	Reverse polarity protection; Polarity protection diode
	Freewheeling diode; Freewheeling diode
Transmission frequency	300 Hz

Output data

Contact switching type	1 N/O contact
Design of digital output	electronic
Output voltage range	3 V DC ... 33 V DC
Limiting continuous current	3 A (see derating curve)
Maximum inrush current	15 A (10 ms)
Voltage drop at max. limiting continuous current	≤ 200 mV
Output circuit	2-conductor, floating
Protective circuit	Reverse polarity protection; Polarity protection diode

chanhvinh.com

PLC-OSC- 5DC/ 24DC/ 2/ACT - Solid-state relay module

2980144

https://www.phoenixcontact.com/pc/products/2980144

	Surge protection

Connection data

Connection method	Screw connection
Stripping length	8 mm
Screw thread	M3
Conductor cross section rigid	0.14 mm² ... 2.5 mm²
Conductor cross section flexible	0.14 mm² ... 2.5 mm²
	0.2 mm² ... 2.5 mm² (Single ferrule)
	2x 0.5 mm² ... 1.5 mm² (TWIN ferrule)
Conductor cross section AWG	26 ... 14
Tightening torque	0.6 Nm ... 0.8 Nm

Dimensions

Width	6.2 mm
Height	80 mm
Depth	94 mm

Material specifications

Color	gray (RAL 7042)
Flammability rating according to UL 94	V0 (Housing)

Environmental and real-life conditions

Ambient conditions

Ambient temperature (operation)	-25 °C ... 60 °C
Ambient temperature (storage/transport)	-25 °C ... 70 °C

Approvals

CE

Certificate	CE-compliant

UKCA

Certificate	UKCA-compliant

Shipbuilding approval

Certificate	TAE0000196

Corrosive gas test

Identification	ISA-S71.04. G3 Harsh Group
	EN 60068-2-60

Shipbuilding data

Temperature	D
Humidity	A
Vibration	B/C

chanhvinh.com

PLC-OSC- 5DC/ 24DC/ 2/ACT - Solid-state relay module

2980144

https://www.phoenixcontact.com/pc/products/2980144

EMC	B
Enclosure	Required protection according to the Rules shall be provided upon installation on board

EMC data

Electromagnetic compatibility	Conformance with EMC directive
Low Voltage Directive	Conformance with Low Voltage Directive

Standards and regulations

Standards/regulations

Standards/regulations	IEC 60947-5-1

Mounting

Mounting type	DIN rail mounting
Assembly note	in rows with zero spacing
Mounting position	any

chanhvinh.com

PLC-OSC- 5DC/ 24DC/ 2/ACT - Solid-state relay module

2980144

https://www.phoenixcontact.com/pc/products/2980144

Drawings

Circuit diagram

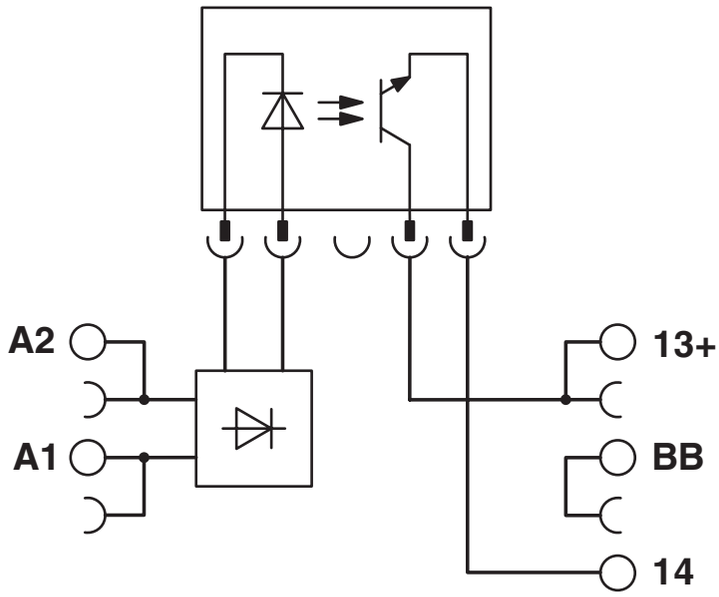

chanhvinh.com

PLC-OSC- 5DC/ 24DC/ 2/ACT - Solid-state relay module

2980144

https://www.phoenixcontact.com/pc/products/2980144

Approvals

To download certificates, visit the product detail page: https://www.phoenixcontact.com/pc/products/2980144

EAC
Approval ID: RU*C-DE.*08.B.00010

DNV GL
Approval ID: TAE0000196

cULus Listed
Approval ID: E140324

chanhvinh.com

PLC-OSC- 5DC/ 24DC/ 2/ACT - Solid-state relay module

2980144

https://www.phoenixcontact.com/pc/products/2980144

Classifications

ECLASS

ECLASS-11.0	27371604
ECLASS-12.0	27371604
ECLASS-13.0	27371604

ETIM

ETIM 9.0	EC001504

UNSPSC

UNSPSC 21.0	39122300

chanhvinh.com

PLC-OSC- 5DC/ 24DC/ 2/ACT - Solid-state relay module

2980144

https://www.phoenixcontact.com/pc/products/2980144

Environmental product compliance

EU RoHS

Fulfills EU RoHS substance requirements	Yes
Exemption	7(a), 7(c)-I

China RoHS

Environment friendly use period (EFUP)	EFUP-50
	An article-related China RoHS declaration table can be found in the download area for the respective article under "Manufacturer declaration". For all articles with EFUP-E, no China RoHS declaration table issued and required.

EU REACH SVHC

REACH candidate substance (CAS No.)	Hexahydromethylphthalic anhydride(CAS: n/a)
	Lead(CAS: 7439-92-1)
SCIP	3e9f17f0-91ca-4ba3-9bbe-9260f984b13f

Phoenix Contact 2025 © - all rights reserved
https://www.phoenixcontact.com

PHOENIX CONTACT GmbH & Co. KG
Flachsmarktstraße 8
D-32825 Blomberg
+49 (0) 5235-3 00
info@phoenixcontact.com