chanhvinh.com

PLC-BSC- 24DC/ 1/ACT - Relay base

2966058

https://www.phoenixcontact.com/pc/products/2966058

Please be informed that the data shown in this PDF document is generated from our online catalog. Please find the complete data in the user documentation. Our general terms of use for downloads are valid.



6.2 mm PLC basic terminal block for output functions with screw connection, without relay or solid-state relay, for mounting on DIN rail NS 35/7,5, with load return line connection (BB), 1 N/O contact, input voltage 24 V DC

Commercial data

Item number	2966058
Packing unit	10 pc
Minimum order quantity	10 pc
Sales key	08
Product key	DK6221
GTIN	4017918130817
Weight per piece (including packing)	34.5 g
Weight per piece (excluding packing)	34.5 g
Customs tariff number	85366990
Country of origin	DE

chanhvinh.com

PLC-BSC- 24DC/ 1/ACT - Relay base

2966058

https://www.phoenixcontact.com/pc/products/2966058

Technical data

Notes

Utilization restriction

EMC note	EMC: class A product, see manufacturer's declaration in the download area

Product properties

Product type	Relay socket
Product family	PLC-INTERFACE
Application	Output function
Operating mode	100% operating factor

Insulation characteristics

Pollution degree	3

Electrical properties

Protective circuit	Damping diode, polarity protection diode

Input data

Nominal input voltage U_N	24 V DC
	The nominal voltage of the plug-on electromechanical relay or solid-state relay (see necessary accessories) deviates from the nominal input voltage of the base with integrated upstream circuit
Protective circuit	Freewheeling diode
Nominal input voltage U_N	24 V DC
	The nominal voltage of the plug-on electromechanical relay or solid-state relay (see necessary accessories) deviates from the nominal input voltage of the base with integrated upstream circuit

Connection data

Connection method	Screw connection
Stripping length	8 mm
Screw thread	M3
Conductor cross section rigid	0.14 mm² ... 2.5 mm²
Conductor cross section flexible	0.14 mm² ... 2.5 mm²
	0.2 mm² ... 2.5 mm² (Single ferrule)
	2x 0.5 mm² ... 1.5 mm² (TWIN ferrule)
Conductor cross section AWG	26 ... 14
Tightening torque	0.6 Nm ... 0.8 Nm

Signaling

Status display	LED

Dimensions

chanhvinh.com

PLC-BSC- 24DC/ 1/ACT - Relay base

2966058

https://www.phoenixcontact.com/pc/products/2966058

Width	6.2 mm
Height	80 mm
Depth	94 mm

Material specifications

Color	gray (RAL 7042)
Flammability rating according to UL 94	V0 (Housing)

Environmental and real-life conditions

Ambient conditions

Ambient temperature (operation)	-40 °C ... 60 °C
Ambient temperature (storage/transport)	-40 °C ... 85 °C

Approvals

CE

Certificate	CE-compliant

UKCA

Certificate	UKCA-compliant

Shipbuilding approval

Certificate	TAE0000196

Corrosive gas test

Identification	ISA-S71.04. G3 Harsh Group
	EN 60068-2-60
Temperature	D
Humidity	A
Vibration	B/C
EMC	B
Enclosure	Required protection according to the Rules shall be provided upon installation on board

EMC data

Electromagnetic compatibility	Conformance with EMC directive
Low Voltage Directive	Conformance with Low Voltage Directive

Mounting

Mounting type	DIN rail mounting
Assembly note	in rows with zero spacing
Mounting position	any

chanhvinh.com

PLC-BSC- 24DC/ 1/ACT - Relay base

2966058

https://www.phoenixcontact.com/pc/products/2966058

Drawings

Circuit diagram

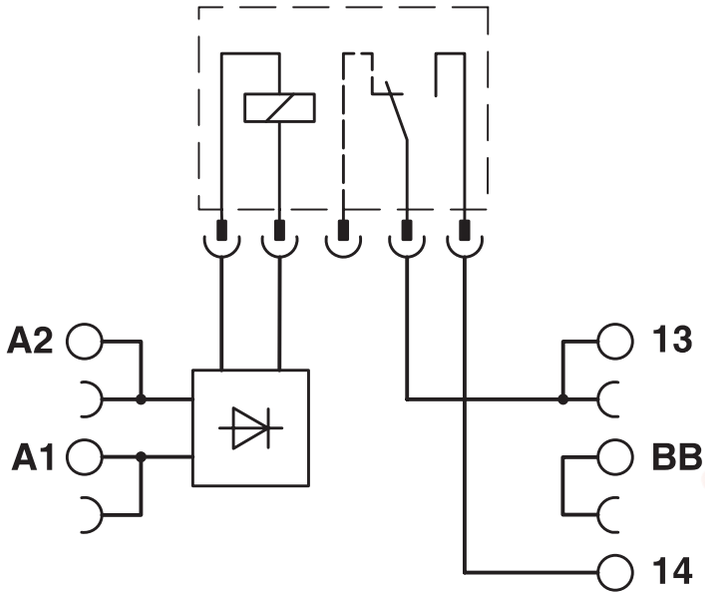

Circuit diagram

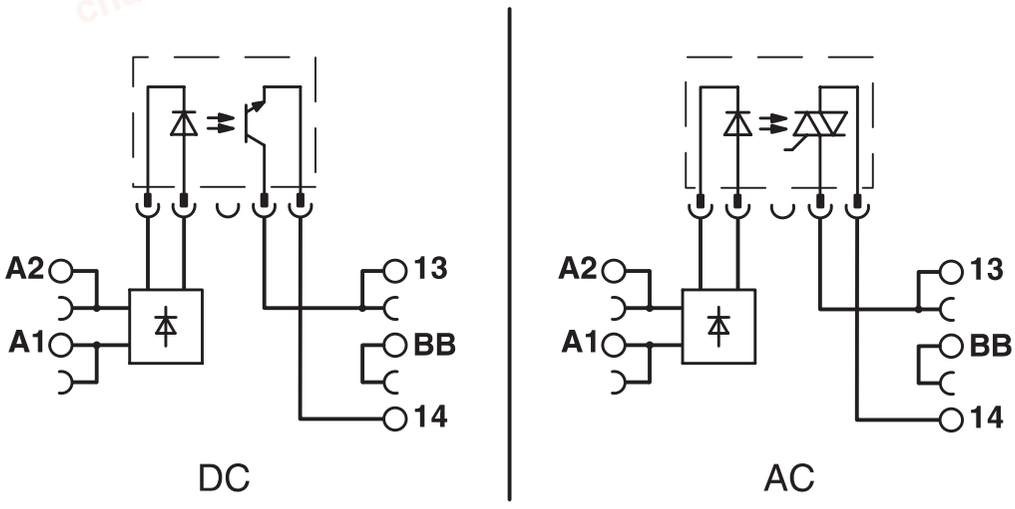

chanhvinh.com

PLC-BSC- 24DC/ 1/ACT - Relay base

2966058

https://www.phoenixcontact.com/pc/products/2966058

Approvals

To download certificates, visit the product detail page: https://www.phoenixcontact.com/pc/products/2966058

cUL Recognized
Approval ID: E238705

UL Recognized
Approval ID: E238705

EAC
Approval ID: RU D-DE.B*00573/18

DNV GL
Approval ID: TAE0000196

cULus Recognized

chanhvinh.com

PLC-BSC- 24DC/ 1/ACT - Relay base

2966058

https://www.phoenixcontact.com/pc/products/2966058

Classifications

ECLASS

ECLASS-11.0	27371603
ECLASS-12.0	27371603
ECLASS-13.0	27371603

ETIM

ETIM 9.0	EC001456

UNSPSC

UNSPSC 21.0	39122300

chanhvinh.com

PLC-BSC- 24DC/ 1/ACT - Relay base

2966058

https://www.phoenixcontact.com/pc/products/2966058

Environmental product compliance

EU RoHS

Fulfills EU RoHS substance requirements	Yes
Exemption	7(a), 7(c)-I

China RoHS

Environment friendly use period (EFUP)	EFUP-50
	An article-related China RoHS declaration table can be found in the download area for the respective article under "Manufacturer declaration". For all articles with EFUP-E, no China RoHS declaration table issued and required.

EU REACH SVHC

REACH candidate substance (CAS No.)	Hexahydromethylphthalic anhydride(CAS: n/a)
	Lead(CAS: 7439-92-1)
SCIP	603f3166-d55b-4dd7-92e3-5b65103cddeb

Phoenix Contact 2025 © - all rights reserved
https://www.phoenixcontact.com

PHOENIX CONTACT GmbH & Co. KG
Flachsmarktstraße 8
D-32825 Blomberg
+49 (0) 5235-3 00
info@phoenixcontact.com