chanhvinh.com

REL-MR- 24DC/1IC - Single relay

2961341

https://www.phoenixcontact.com/pc/products/2961341

Please be informed that the data shown in this PDF document is generated from our online catalog. Please find the complete data in the user documentation. Our general terms of use for downloads are valid.



Pluggable miniature power relay, with power contact for high switch-on currents up to 130 A peaks, 1 N/O contact, input voltage: 24 V DC

Your advantages

- Safe isolation between coil and contact side
- High degree of protection up to RT III depending on type (wash-proof)
- Power contacts up to 16 A

Commercial data

Item number	2961341
Packing unit	10 pc
Minimum order quantity	10 pc
Sales key	08
Product key	DK6931
Catalog page	Page 395 (C-5-2019)
GTIN	4017918187569
Weight per piece (including packing)	16.1 g
Weight per piece (excluding packing)	12.815 g
Customs tariff number	85364900
Country of origin	AT

chanhvinh.com

REL-MR- 24DC/1IC - Single relay

2961341

https://www.phoenixcontact.com/pc/products/2961341

Technical data

Product properties

Product type	Single relay
Operating mode	100% operating factor
Mechanical service life	3x 10^7 cycles

Insulation characteristics

Insulation	Safe isolation, reinforced insulation
Overvoltage category	III
Pollution degree	3

Data management status

Date of last data management	02.05.2024

Electrical properties

Maximum power dissipation for nominal condition	0.41 W
Test voltage (Winding/contact)	5 kV AC (50 Hz, 1 min., winding/contact)
Rated insulation voltage	250 V AC
Rated surge voltage	6 kV

Input data

Coil side

Nominal input voltage U_N	24 V DC
Input voltage range	19.2 V DC ... 54 V DC
Input voltage range in reference to U_N	see diagram
Drive and function	monostable
Drive (polarity)	non-polarized
Typical input current at U_N	17 mA
Typical response time	8 ms
Typical release time	3 ms
Coil resistance	1440 Ω ±10 % (20 °C)

Output data

Switching

Contact switching type	1 N/O contact
Type of switch contact	Single contact
Contact material	AgSnO
Maximum switching voltage	250 V AC/DC
Minimum switching voltage	12 V (100 mA)
Limiting continuous current	16 A
Maximum inrush current	80 A (20 ms)
	130 A (peak, at capacitive load, 230 V AC, 24 µF)

chanhvinh.com

Min. switching current	100 mA (at 12 V DC)
Interrupting rating (ohmic load) max.	384 W (at 24 V DC)
	58 W (at 48 V DC)
	48 W (at 60 V DC)
	50 W (at 110 V DC)
	80 W (at 220 V DC)
	4000 VA (for 250 V AC)
Switching capacity min.	1200 mW
Switching capacity	2 A (at 24 V, DC13)
	0.2 A (at 110 V, DC13)
	0.2 A (at 250 V, DC13)
	6 A (at 24 V, AC15)
	6 A (at 120 V, AC15)
	6 A (at 250 V, AC15)
Motor load according to UL 508	1/2 HP, 120 V AC (N/O contact)
	1 HP, 250 V AC (N/O contact)

Connection data

Connection method	Plug / solder connection

Dimensions

Dimensional drawing	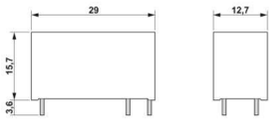
Width	12.7 mm
Height	29 mm
Depth	15.7 mm

Material specifications

Color	white (RAL 9010)

Environmental and real-life conditions

Ambient conditions

Degree of protection	RT II
Ambient temperature (operation)	-40 °C ... 85 °C
Ambient temperature (storage/transport)	-40 °C ... 85 °C
Altitude	≤ 2000 m

Approvals

Corrosive gas test

Identification	ISA-S71.04. G3 Harsh Group
	EN 60068-2-60

chanhvinh.com

REL-MR- 24DC/1IC - Single relay

2961341

https://www.phoenixcontact.com/pc/products/2961341

Standards and regulations

Standards/regulations	EN 50178
	EN 61810-1

Mounting

Mounting type	Plug-in mounting
Assembly note	Can be aligned without spacing (> 70 °C ≥ 2.5 mm)
Mounting position	any

chanhvinh.com

REL-MR- 24DC/1IC - Single relay

2961341

https://www.phoenixcontact.com/pc/products/2961341

Drawings

Diagram

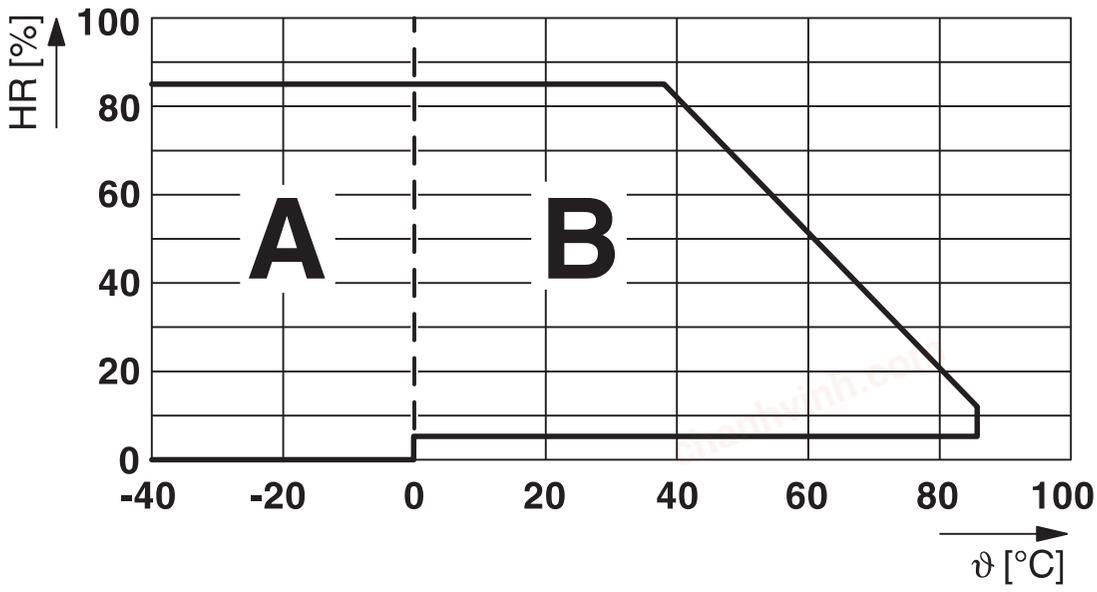

Permissible humidity for operation and storage.
The maximum permissible ambient temperature as specified in the data sheet must be observed.

Area A: Ice buildup at ambient temperatures ≤ 0°C must be prevented
Area B: Condensation at ambient temperatures > 0°C must be prevented

On 30 full days that are naturally distributed across an entire year, a humidity level of 95% is permissible at an ambient temperature ≤ 25°C.

Dimensional drawing

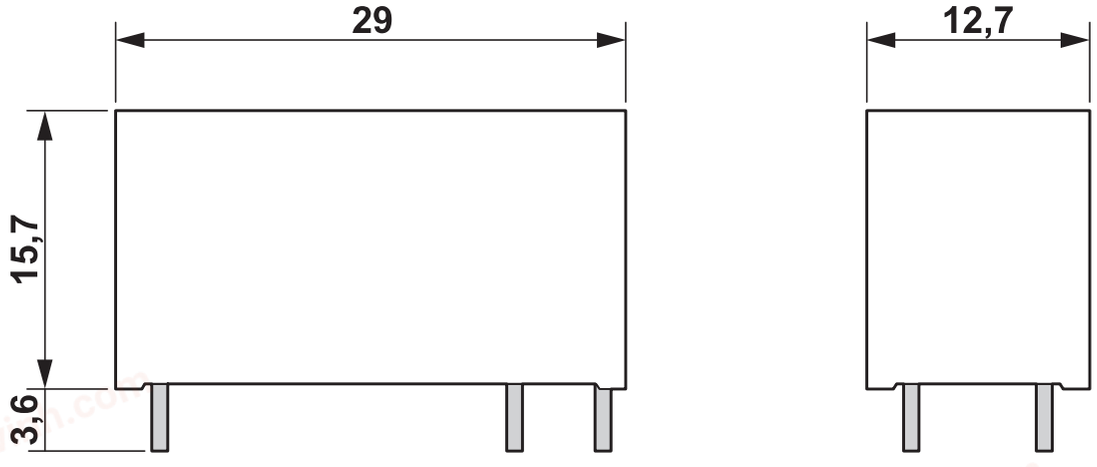

chanhvinh.com

REL-MR- 24DC/1IC - Single relay

2961341

https://www.phoenixcontact.com/pc/products/2961341

Diagram

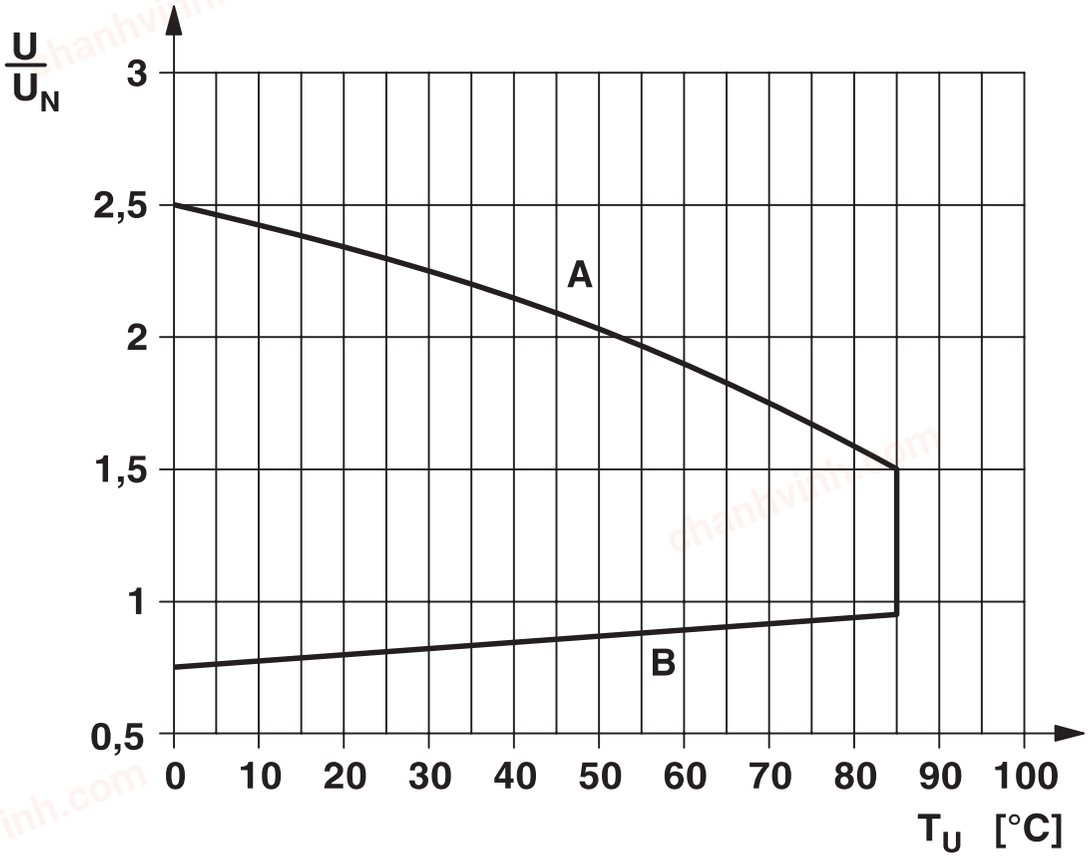

Curve A

Maximum permissible continuous voltage U_{max} with limiting continuous current on the contact side (see relevant technical data)

Curve B

Minimum permissible operate voltage U_{op} after pre-excitation (see relevant technical data)

chanhvinh.com

REL-MR- 24DC/1IC - Single relay

2961341

https://www.phoenixcontact.com/pc/products/2961341

Drilling plan/solder pad geometry

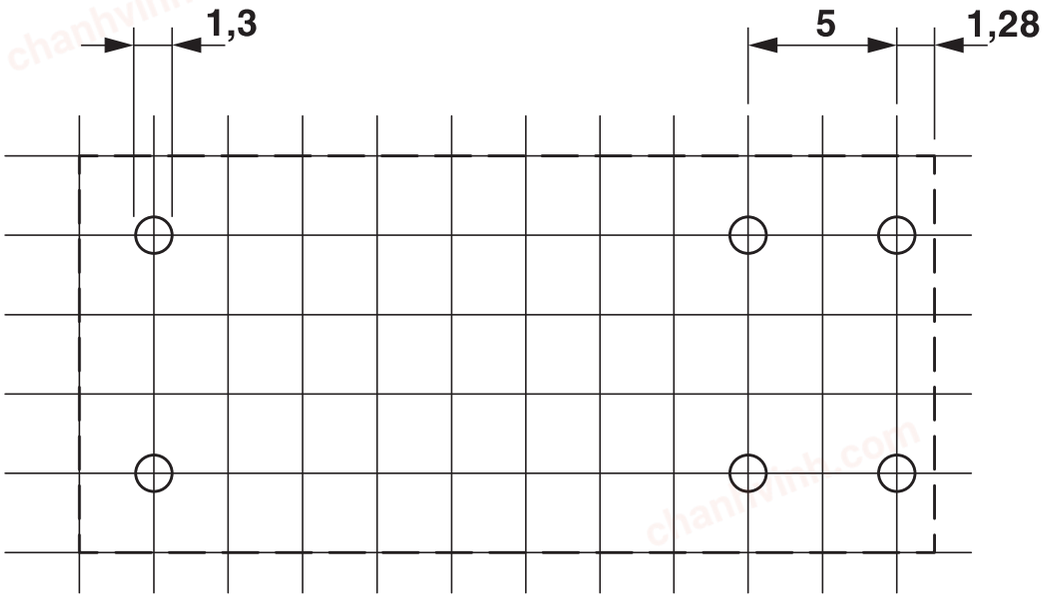

a = pitch division 2.5 mm

Circuit diagram

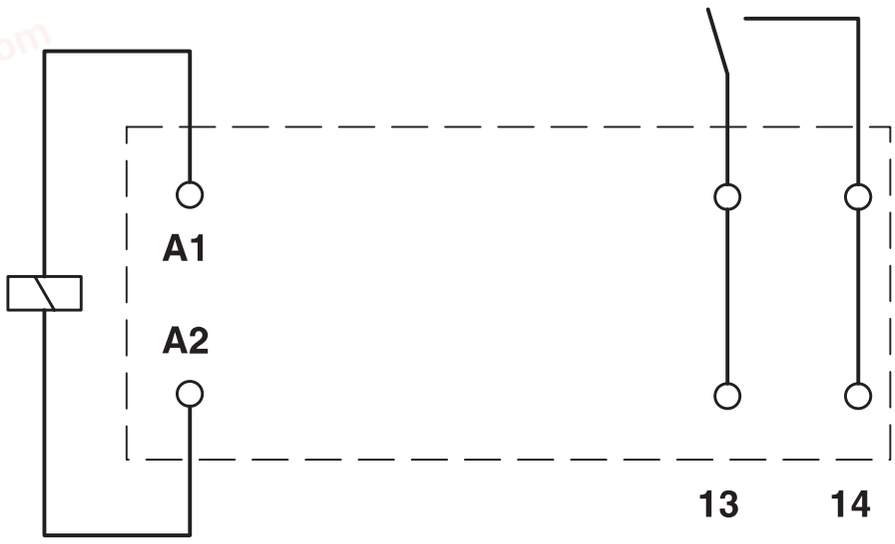

chanhvinh.com

REL-MR- 24DC/1IC - Single relay

2961341

https://www.phoenixcontact.com/pc/products/2961341

Approvals

To download certificates, visit the product detail page: https://www.phoenixcontact.com/pc/products/2961341

cUL Recognized
Approval ID: FILE E 228652

UL Recognized
Approval ID: FILE E 228652

EAC
Approval ID: RU*C-DE.*08.B.00010

UL Recognized
Approval ID: FILE E 172140

VDE Zeichengenehmigung
Approval ID: 40048281

cUL Recognized
Approval ID: FILE E 172140

cULus Recognized
Approval ID: E172140

chanhvinh.com

REL-MR- 24DC/1IC - Single relay

2961341

https://www.phoenixcontact.com/pc/products/2961341

Classifications

ECLASS

ECLASS-11.0	27371601
ECLASS-12.0	27371601
ECLASS-13.0	27371601

ETIM

ETIM 9.0	EC001437

UNSPSC

UNSPSC 21.0	39122300

chanhvinh.com

REL-MR- 24DC/1IC - Single relay

2961341

https://www.phoenixcontact.com/pc/products/2961341

Environmental product compliance

EU RoHS

Fulfills EU RoHS substance requirements	Yes, No exemptions

China RoHS

Environment friendly use period (EFUP)	EFUP-E
	No hazardous substances above the limits

EU REACH SVHC

REACH candidate substance (CAS No.)	No substance above 0.1 wt%

Phoenix Contact 2025 © - all rights reserved
https://www.phoenixcontact.com

PHOENIX CONTACT GmbH & Co. KG
Flachsmarktstraße 8
D-32825 Blomberg
+49 (0) 5235-3 00
info@phoenixcontact.com