chanhvinh.com

# IB IL AO 2/SF-PAC - Analog module

2863083

https://www.phoenixcontact.com/pc/products/2863083

Please be informed that the data shown in this PDF document is generated from our online catalog. Please find the complete data in the user documentation. Our general terms of use for downloads are valid.



Inline, Analog output terminal, Analog outputs: 2, 0 V ... 10 V, 0 mA ... 20 mA, 4 mA ... 20 mA, connection technology: 2-conductor, transmission speed in the local bus: 500 kbps, degree of protection: IP20, including Inline connectors and marking fields

## Product description

The terminal is designed for use within an Inline station. It is used to output analog current and voltage signals. The signals are available with a 16-bit resolution.

## Your advantages

- 2 analog output channels
- Connection of actuators in 2-conductor technology
- Voltage range: 0 V ... 10 V
- Current ranges: 0 mA ... 20 mA, 4 mA ... 20 mA
- Output values can be represented in two different formats
- Behavior of the outputs in the event of an error can be configured
- Process data update including conversion time of the digital/analog converter < 1 ms

## Commercial data

| | |
|---|---|
| Item number | 2863083 |
| Packing unit | 1 pc |
| Minimum order quantity | 1 pc |
| Product key | DRI142 |
| Catalog page | Page 142 (C-6-2019) |
| GTIN | 4017918917104 |
| Weight per piece (including packing) | 234.6 g |
| Weight per piece (excluding packing) | 190 g |
| Customs tariff number | 85389099 |
| Country of origin | DE |

chanhvinh.com

# IB IL AO 2/SF-PAC - Analog module

2863083

https://www.phoenixcontact.com/pc/products/2863083

## Technical data

### Dimensions

| | |
|---|---|
| Dimensional drawing | 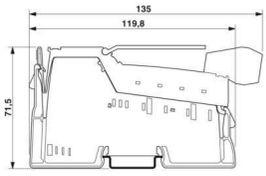 |
| Width | 48.8 mm |
| Height | 135 mm |
| Depth | 71.5 mm |
| Note on dimensions | Housing dimensions |

### Notes

Note on application

| | |
|---|---|
| Note on application | Only for industrial use |

Utilization restriction

| | |
|---|---|
| CCCex note | Use in potentially explosive areas is not permitted in China. |

### Interfaces

Inline local bus

| | |
|---|---|
| Number of interfaces | 2 |
| Connection method | Inline data jumper |
| Transmission speed | 500 kbps |

### System properties

Module

| | |
|---|---|
| ID code (dec.) | 91 |
| ID code (hex) | 5B |
| Length code (hex) | 02 |
| Length code (dec) | 02 |
| Process data channel | 32 bit |
| Input address area | 4 Byte |
| Output address area | 4 Byte |
| Register length | 32 bit |
| Required parameter data | 6 Byte |
| Required configuration data | 5 Byte |

### Output data

Analog:

chanhvinh.com

# IB IL AO 2/SF-PAC - Analog module

2863083

https://www.phoenixcontact.com/pc/products/2863083

| | |
|---|---|
| Output name | Analog outputs |
| Connection technology | 2-conductor |
| Note regarding the connection technology | shielded |
| Number of outputs | 2 |
| D/A converter resolution | 16 bit |
| Protective circuit | Transient protection of outputs |
| | Short-circuit protection of outputs |
| Representation of output values | 16 bits (15 bits + sign) |
| DAC resolution | 16 bit |
| Process data update | < 1 ms |
| Current output signal | 0 mA ... 20 mA |
| | 4 mA ... 20 mA |
| Load/output load current output | ≤ 500 Ω |
| Voltage output signal | 0 V ... 10 V |
| Load/output load voltage output | ≥ 2 kΩ |

## Product properties

| | |
|---|---|
| Product type | I/O component |
| Product family | Inline |
| Type | modular |
| Scope of delivery | including Inline connectors and marking fields |
| Operating mode | Process data mode with two words |
| Diagnostics messages | I/O supply failure I/O error message sent to the bus coupler |

Insulation characteristics

| | |
|---|---|
| Overvoltage category | II (IEC 60664-1, EN 60664-1) |
| Pollution degree | 2 (IEC 60664-1, EN 60664-1) |

## Electrical properties

| | |
|---|---|
| Maximum power dissipation for nominal condition | 2.6 W |

Potentials: Communications power ($U_L$)

| | |
|---|---|
| Supply voltage | 7.5 V DC (via voltage jumper) |
| Current draw | max. 45 mA |
| | typ. 36 mA |

Potentials: Supply of analog modules ($U_{ANA}$)

| | |
|---|---|
| Supply voltage | 24 V DC (via voltage jumper) |
| Supply voltage range | 19.2 V DC ... 30 V DC (including all tolerances, including ripple) |
| Current draw | max. 95 mA |
| | typ. 75 mA |

Electrical isolation/isolation of the voltage ranges

| | |
|---|---|
| Test voltage: 7.5 V supply (bus logic), 24 V supply $U_{ANA}$ / I/O | 500 V AC, 50 Hz, 1 min |
| Test voltage: 7.5 V supply (bus logic), 24 V supply $U_{ANA}$ / functional ground | 500 V AC, 50 Hz, 1 min |

chanhvinh.com

# IB IL AO 2/SF-PAC - Analog module

2863083

https://www.phoenixcontact.com/pc/products/2863083

| | |
|---|---|
| Test voltage: 24 V supply (I/O) / functional ground | 500 V AC, 50 Hz, 1 min |

## Connection data

### Connection technology

| | |
|---|---|
| Connection name | Inline connector |

### Conductor connection

| | |
|---|---|
| Connection method | Spring-cage connection |
| Conductor cross section rigid | 0.08 mm² ... 1.5 mm² |
| Conductor cross section flexible | 0.08 mm² ... 1.5 mm² |
| Conductor cross section AWG | 28 ... 16 |
| Stripping length | 8 mm |

### Inline connector

| | |
|---|---|
| Connection method | Spring-cage connection |
| Conductor cross section, rigid | 0.08 mm² ... 1.5 mm² |
| Conductor cross section, flexible | 0.08 mm² ... 1.5 mm² |
| Conductor cross section AWG | 28 ... 16 |
| Stripping length | 8 mm |

## Environmental and real-life conditions

### Ambient conditions

| | |
|---|---|
| Ambient temperature (operation) | -25 °C ... 55 °C |
| Degree of protection | IP20 |
| Air pressure (operation) | 70 kPa ... 106 kPa (up to 3000 m above sea level) |
| Air pressure (storage/transport) | 70 kPa ... 106 kPa (up to 3000 m above sea level) |
| Ambient temperature (storage/transport) | -25 °C ... 85 °C |
| Permissible humidity (operation) | 10 % ... 95 % (non-condensing) |
| Permissible humidity (storage/transport) | 10 % ... 95 % (non-condensing) |

## Standards and regulations

| | |
|---|---|
| Protection class | III (IEC 61140, EN 61140, VDE 0140-1) |

## Mounting

| | |
|---|---|
| Mounting type | DIN rail mounting |

chanhvinh.com

# IB IL AO 2/SF-PAC - Analog module

2863083

https://www.phoenixcontact.com/pc/products/2863083

## Drawings

Connection diagram

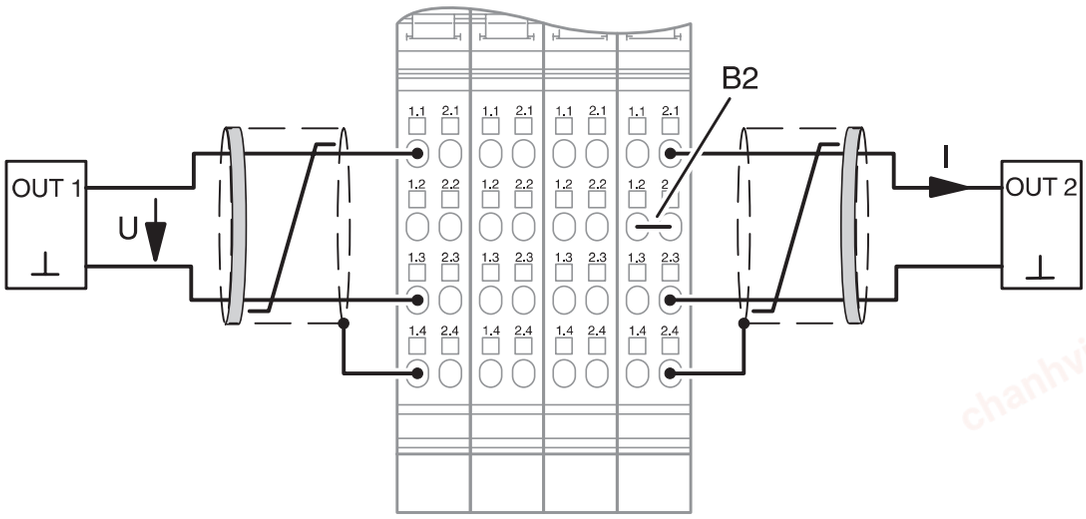


Dimensional drawing

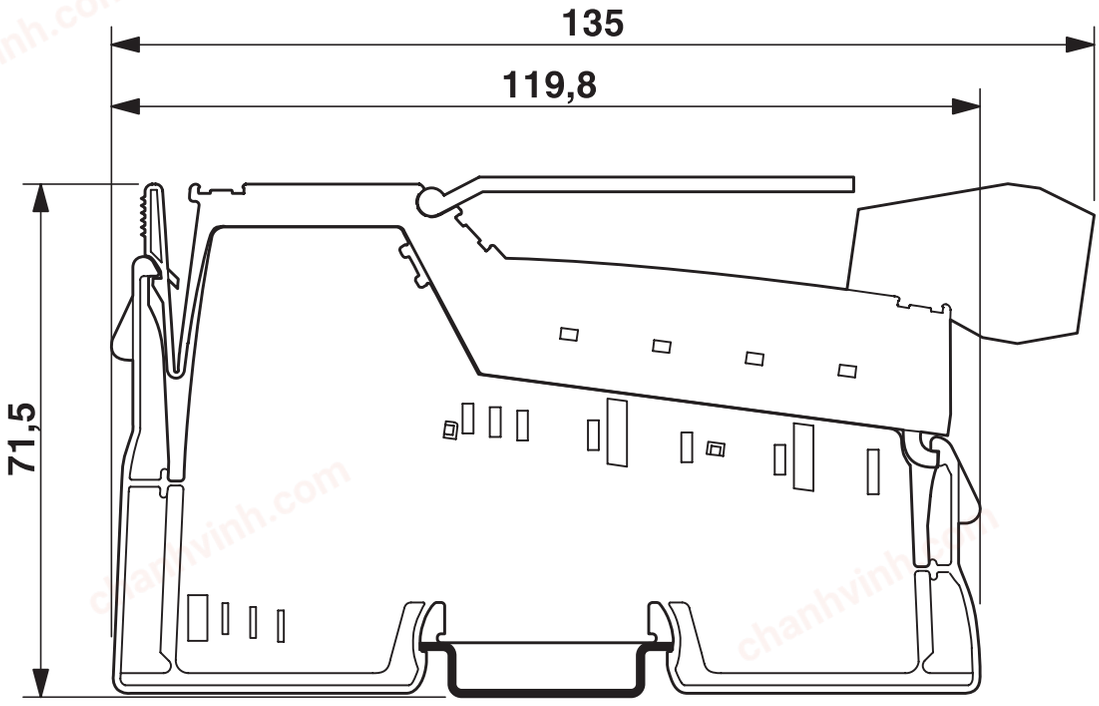

chanhvinh.com

# IB IL AO 2/SF-PAC - Analog module

2863083

https://www.phoenixcontact.com/pc/products/2863083

## Block diagram

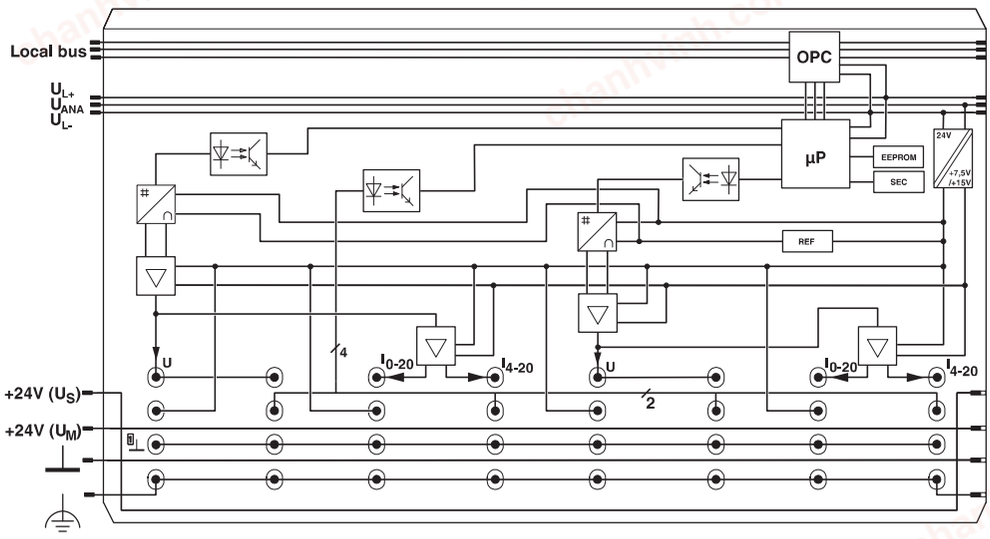

chanhvinh.com

# IB IL AO 2/SF-PAC - Analog module

2863083

https://www.phoenixcontact.com/pc/products/2863083

## Approvals

To download certificates, visit the product detail page: https://www.phoenixcontact.com/pc/products/2863083

**EAC**
Approval ID: TR TS_D_01921-19

**DNV GL**
Approval ID: TAA00000BN

**BV**
Approval ID: 20977/C0 BV

**BSH**
Approval ID: 658a

**RINA**
Approval ID: ELE121121XG

**ABS**
Approval ID: 22-2226444-PDA

**UAE-RoHS**
Approval ID: 22-04-13078

**cULus Recognized**
Approval ID: E140324

**cUL Listed**
Approval ID: E256199

**UL Listed**
Approval ID: E256199

**cULus Listed**
Approval ID: E199827

chanhvinh.com

# IB IL AO 2/SF-PAC - Analog module

2863083

https://www.phoenixcontact.com/pc/products/2863083

| |
|---|
| **cULus Listed** |

chanhvinh.com

# IB IL AO 2/SF-PAC - Analog module

2863083

https://www.phoenixcontact.com/pc/products/2863083

## Classifications

### ECLASS

| | |
|---|---|
| ECLASS-11.0 | 27242601 |
| ECLASS-12.0 | 27242601 |
| ECLASS-13.0 | 27242601 |

### ETIM

| | |
|---|---|
| ETIM 9.0 | EC001596 |

### UNSPSC

| | |
|---|---|
| UNSPSC 21.0 | 32151600 |

chanhvinh.com

# IB IL AO 2/SF-PAC - Analog module

2863083

https://www.phoenixcontact.com/pc/products/2863083

## Environmental product compliance

EU RoHS

| | |
|---|---|
| Fulfills EU RoHS substance requirements | Yes |
| Exemption | 7(a), 7(c)-I |

China RoHS

| | |
|---|---|
| Environment friendly use period (EFUP) | EFUP-50 |
| | An article-related China RoHS declaration table can be found in the download area for the respective article under "Manufacturer declaration". For all articles with EFUP-E, no China RoHS declaration table issued and required. |

EU REACH SVHC

| | |
|---|---|
| REACH candidate substance (CAS No.) | Lead(CAS: 7439-92-1) |
| SCIP | 05a70494-6ebe-4194-a771-484a50280449 |

Phoenix Contact 2025 © - all rights reserved
https://www.phoenixcontact.com

PHOENIX CONTACT GmbH & Co. KG
Flachsmarktstraße 8
D-32825 Blomberg
+49 (0) 5235-3 00
info@phoenixcontact.com