chanhvinh.com

# IB IL 24/230 DOR1/W-PAC - Relay module

2861881

https://www.phoenixcontact.com/pc/products/2861881

Please be informed that the data shown in this PDF document is generated from our online catalog. Please find the complete data in the user documentation. Our general terms of use for downloads are valid.



Inline, Relay terminal, Relay output: 1 (floating), Changeover contact, 24 V AC, 230 V AC, for switching ohmic loads, transmission speed in the local bus: 500 kbps, degree of protection: IP20, including Inline connector and labeling field

## Product description

The terminal is designed for use within an Inline station. It has one floating relay changeover contact.

## Your advantages

- Safe isolation
- Floating connection for one actuator
- Nominal current at the output: 3 A
- Total current of the terminal: 3 A
- Diagnostic and status indicators

## Commercial data

| | |
|---|---|
| Item number | 2861881 |
| Packing unit | 1 pc |
| Minimum order quantity | 1 pc |
| Product key | DRI133 |
| Catalog page | Page 133 (C-6-2019) |
| GTIN | 4017918894580 |
| Weight per piece (including packing) | 79.6 g |
| Weight per piece (excluding packing) | 46 g |
| Customs tariff number | 85389099 |
| Country of origin | DE |

chanhvinh.com

# IB IL 24/230 DOR1/W-PAC - Relay module

2861881

https://www.phoenixcontact.com/pc/products/2861881

## Technical data

### Dimensions

| | |
|---|---|
| Dimensional drawing | 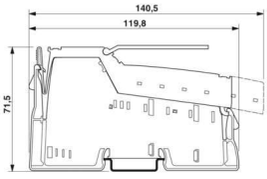 |
| Width | 12.2 mm |
| Height | 119.8 mm |
| Depth | 71.5 mm |
| Note on dimensions | Housing dimensions |

### Notes

Note on application

| | |
|---|---|
| Note on application | Only for industrial use |

Utilization restriction

| | |
|---|---|
| CCCex note | Use in potentially explosive areas is not permitted in China. |

### Interfaces

Inline local bus

| | |
|---|---|
| Number of interfaces | 2 |
| Connection method | Inline data jumper |
| Transmission speed | 500 kbps |

### System properties

Module

| | |
|---|---|
| ID code (dec.) | 189 |
| ID code (hex) | BD |
| Length code (hex) | C2 |
| Length code (dec) | 194 |
| Process data channel | 2 bit |
| Input address area | 0 Byte |
| Output address area | 2 bit (Only bit0 is occupied) |
| Register length | 2 bit |
| Required parameter data | 3 Byte |
| Required configuration data | 4 Byte |

### Output data

# IB IL 24/230 DOR1/W-PAC - Relay module

2861881

https://www.phoenixcontact.com/pc/products/2861881

Relay

| | |
|---|---|
| Number of outputs | 1 (floating) |
| Connection method | Spring-cage connection |
| Contact switching type | Changeover contact |
| Switching voltage | max. 250 V DC |
| | min. 5 V DC |

## Product properties

| | |
|---|---|
| Product type | I/O component |
| Product family | Inline |
| Type | modular |
| Scope of delivery | including Inline connector and labeling field |
| No. of channels | 1 |
| Special properties | for switching ohmic loads |

## Electrical properties

| | |
|---|---|
| Maximum power dissipation for nominal condition | 0.9 W |

Potentials: Communications power ($U_L$)

| | |
|---|---|
| Supply voltage | 7.5 V DC (via voltage jumper) |
| Current draw | max. 60 mA |

Electrical isolation/isolation of the voltage ranges

| | |
|---|---|
| Test voltage: Relay contact / Bus logics | 4 kV, 50 Hz, 1 min |
| Test voltage: Contact/contact | 1 kV, 50 Hz, 1 min |
| Test voltage: Contact / PE | 1 kV, 50 Hz, 1 min |

## Connection data

Connection technology

| | |
|---|---|
| Connection name | Inline connector |

Conductor connection

| | |
|---|---|
| Connection method | Spring-cage connection |
| Conductor cross section rigid | 0.08 mm² ... 1.5 mm² |
| Conductor cross section flexible | 0.08 mm² ... 1.5 mm² |
| Conductor cross section AWG | 28 ... 16 |
| Stripping length | 8 mm |

Inline connector

| | |
|---|---|
| Connection method | Spring-cage connection |
| Conductor cross section, rigid | 0.08 mm² ... 1.5 mm² |
| Conductor cross section, flexible | 0.08 mm² ... 1.5 mm² |
| Conductor cross section AWG | 28 ... 16 |
| Stripping length | 8 mm |

chanhvinh.com

# IB IL 24/230 DOR1/W-PAC - Relay module

2861881

https://www.phoenixcontact.com/pc/products/2861881

## Environmental and real-life conditions

### Ambient conditions

| | |
|---|---|
| Ambient temperature (operation) | -25 °C ... 55 °C |
| Degree of protection | IP20 |
| Air pressure (operation) | 70 kPa ... 106 kPa (up to 3000 m above sea level) |
| Air pressure (storage/transport) | 70 kPa ... 106 kPa (up to 3000 m above sea level) |
| Ambient temperature (storage/transport) | -25 °C ... 85 °C |
| Permissible humidity (operation) | 75 % ... 85 % (in the range of -25°C ... +55°C, appropriate measures against increased humidity (> 85%) must be taken.) |
| Permissible humidity (storage/transport) | 75 % ... 85 % (slight temporary condensation may sometimes appear on the housing) |

## Standards and regulations

| | |
|---|---|
| Protection class | I (IEC 61140, EN 61140, VDE 0140-1) |

## Mounting

| | |
|---|---|
| Mounting type | DIN rail mounting |

chanhvinh.com

# IB IL 24/230 DOR1/W-PAC - Relay module

2861881

https://www.phoenixcontact.com/pc/products/2861881

## Drawings

Dimensional drawing

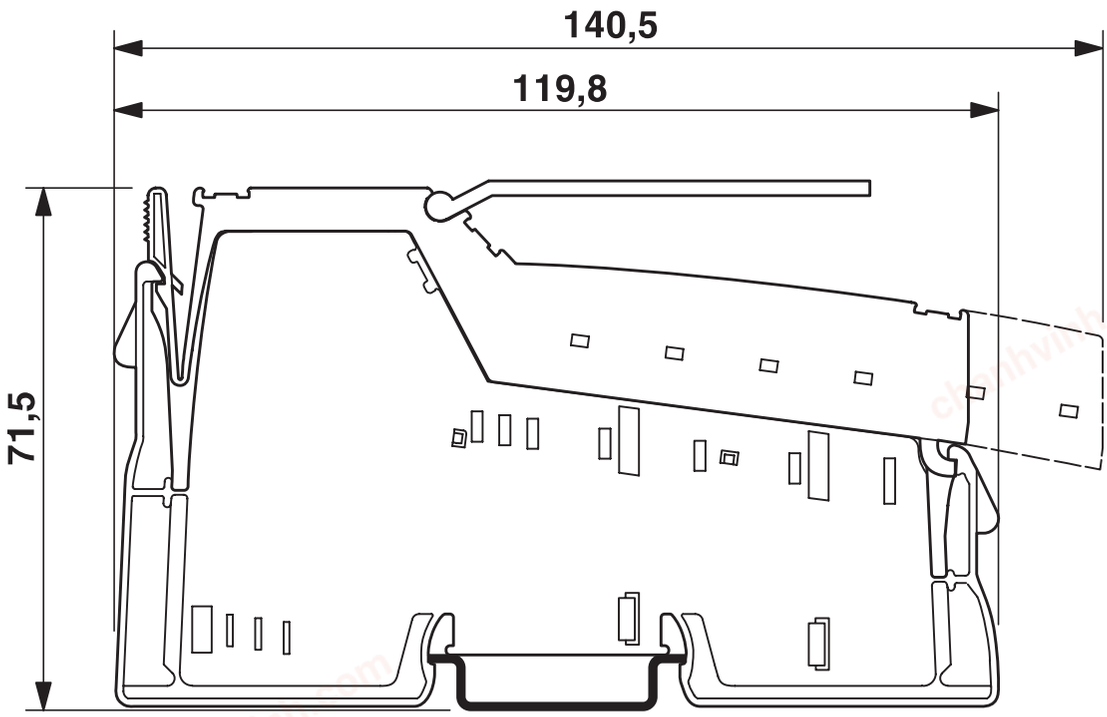


Connection diagram

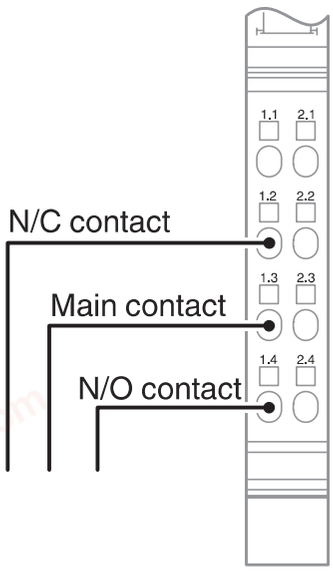

chanhvinh.com

# IB IL 24/230 DOR1/W-PAC - Relay module

2861881

https://www.phoenixcontact.com/pc/products/2861881

Block diagram

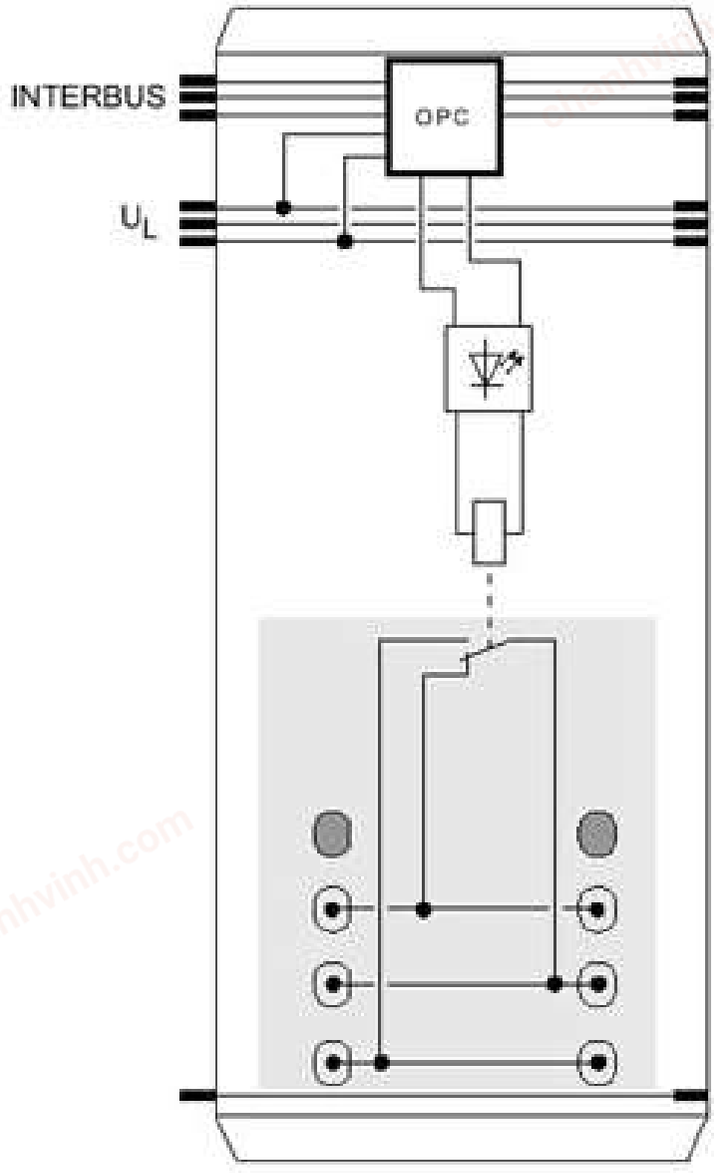

chanhvinh.com

# IB IL 24/230 DOR1/W-PAC - Relay module

2861881

https://www.phoenixcontact.com/pc/products/2861881

## Approvals

To download certificates, visit the product detail page: https://www.phoenixcontact.com/pc/products/2861881

**DNV GL**
Approval ID: TAA00000BN

**BV**
Approval ID: 21725/C0 BV

**ABS**
Approval ID: 22-2226444-PDA

**EAC**
Approval ID: TR_TS_D_01831-19

**UAE-RoHS**
Approval ID: 22-04-13089

**cULus Recognized**
Approval ID: E140324

**cULus Listed**
Approval ID: E199827

chanhvinh.com

# IB IL 24/230 DOR1/W-PAC - Relay module

2861881

https://www.phoenixcontact.com/pc/products/2861881

## Classifications

### ECLASS

| | |
|---|---|
| ECLASS-11.0 | 27242604 |
| ECLASS-12.0 | 27242604 |
| ECLASS-13.0 | 27242604 |

### ETIM

| | |
|---|---|
| ETIM 9.0 | EC001599 |

### UNSPSC

| | |
|---|---|
| UNSPSC 21.0 | 32151600 |

chanhvinh.com

# IB IL 24/230 DOR1/W-PAC - Relay module

2861881

https://www.phoenixcontact.com/pc/products/2861881

## Environmental product compliance

EU RoHS

| | |
|---|---|
| Fulfills EU RoHS substance requirements | Yes |
| Exemption | 7(a), 7(c)-I |

China RoHS

| | |
|---|---|
| Environment friendly use period (EFUP) | EFUP-E |
| | No hazardous substances above the limits |

EU REACH SVHC

| | |
|---|---|
| REACH candidate substance (CAS No.) | Lead(CAS: 7439-92-1) |
| SCIP | 13c16034-a8ca-443c-a470-e16f445a66c3 |

Phoenix Contact 2025 © - all rights reserved
https://www.phoenixcontact.com

PHOENIX CONTACT GmbH & Co. KG
Flachsmarktstraße 8
D-32825 Blomberg
+49 (0) 5235-3 00
info@phoenixcontact.com