chanhvinh.com

FL COMSERVER UNI 232/422/485 - Interface converters

2313452

https://www.phoenixcontact.com/pc/products/2313452

Please be informed that the data shown in this PDF document is generated from our online catalog. Please find the complete data in the user documentation. Our general terms of use for downloads are valid.



Second generation FL COMSERVER UNI..., serial device server for converting a serial 232/422/485 interface to Ethernet, supports TCP, UDP, Modbus gateway, and PPP applications, incl. COM port redirector software and user documentation

Product description

The FL COMSERVER...232/422/485 products are used to integrate serial V.24 (RS-232)/RS-422/RS-485 interfaces into existing Ethernet networks. This provides an easy way of implementing functions such as cable replacement, network integration or a Modbus gateway.

Your advantages

- Modbus gateway between Modbus/RTU / ASCII and Modbus/TCP
- All connections can be plugged in using a COMBICON screw terminal block
- Configuration via web-based management
- Software for virtual COM ports supplied as standard

Commercial data

Item number	2313452
Packing unit	1 pc
Minimum order quantity	1 pc
Product key	DNC321
Catalog page	Page 357 (C-6-2019)
GTIN	4046356451321
Weight per piece (including packing)	172.9 g
Weight per piece (excluding packing)	120.26 g
Customs tariff number	85176200
Country of origin	DE

FL COMSERVER UNI 232/422/485 - Interface converters

2313452

https://www.phoenixcontact.com/pc/products/2313452

Technical data

Notes

Note on application

Note on application	Only for industrial use

Utilization restriction

CCCex note	Use in potentially explosive areas is not permitted in China.

Product properties

Product type	Interface converter
Application	TCP, UDP, Modbus gateway, PPP
MTTF	2013 Years (SN 29500 standard, temperature 25°C, operating cycle 21%)
	879 Years (SN 29500 standard, temperature 40°C, operating cycle 34.25%)
	359 Years (SN 29500 standard, temperature 40°C, operating cycle 100%)
MTBF	666 Years (Telcordia standard, 25°C temperature, 21% operating cycle (5 days a week, 8 hours a day))
	179 Years (Telcordia standard, 40°C temperature, 34.25% operating cycle (5 days a week, 12 hours a day))

System properties

Modbus/TCP-Client

Number of Modbus/TCP clients	8

System requirements

Supported browsers	Netscape Communicator versions 4.5 and up or Internet Explorer versions 5.5 and up

Electrical properties

Electrical isolation	VCC // Ethernet // Serial
Maximum power dissipation for nominal condition	2.4 W
Test voltage data interface/data interface	1.5 kV_{rms} (50 Hz, 1 min.)
Test voltage data interface/power supply	1.5 kV_{rms} (50 Hz, 1 min.)

Supply

Supply voltage range	19.2 V AC/DC ... 28.8 V AC/DC (via pluggable COMBICON screw terminal block)
	22.8 V DC ... 25.2 V DC (as an alternative or redundant, via backplane bus contact and system current supply)
Typical current consumption	100 mA (24 V DC)

Function

Management	Web-based management, SNMP, emergency exit with Telnet and serial

chanhvinh.com

FL COMSERVER UNI 232/422/485 - Interface converters

2313452

https://www.phoenixcontact.com/pc/products/2313452

Status and diagnostic indicators	LEDs: UL (logic voltage), TD + RD (data activity serial), FD (full duplex), 100 (100 Mbps mode), Link (Ethernet), Activity (Ethernet), ERR (error)

Connection data

Supply

Single conductor/terminal point, rigid	0.2 mm² ... 2.5 mm²
Single-wire/terminal point, flexible	0.2 mm² ... 2.5 mm²
Stripping length	7.00 mm
Tightening torque	0.5 Nm ... 0.6 Nm

Interfaces

Signal	Ethernet
	Modbus
Web server	yes

Data: Ethernet interface, 10/100Base-T(X) in accordance with IEEE 802.3

Serial transmission speed	10/100 Mbps, auto negotiation
Connection method	RJ45 jack, shielded
No. of channels	1
Transmission length	≤ 100 m (shielded twisted pair)
Protocols supported	TCP/IP, UDP, Modbus (TCP, RTU/ASCII), PPP
Auxiliary protocols	ARP, DHCP, BOOTP, SNMP, RIP, RARP, HTTP, TFTP, ICMP
Data flow control/protocols	Modbus/TCP

Data: V.24 (RS-232) interface in acc. with ITU-T V.28, EIA/TIA-232, DIN 66259-1

Serial transmission speed	0.3; 0.6; 1.2; 2.4; 4.8; 7.2; 9.6; 19.2; 38.4; 57.6; 115.2; 187.5; 230.4 kbps
Connection method	D-SUB 9 plug
Tightening torque	0.4 Nm
Pin assignment	DTE/DCE switchover via web-based management
Transmission length	15 m
File format/coding	UART/NRZ: 7/8 Bit Data, 1/2 Bit Stopp, None/Even/Odd Parity
Data flow control/protocols	Software handshake, Xon/Xoff, or hardware handshake RTS/CTS // 3964 R compatible, Modbus RTU/ASCII

Data: RS-422 interface in acc. with ITU-T V.11, EIA/TIA-422, DIN 66348-1

Serial transmission speed	0.3; 0.6; 1.2; 2.4; 4.8; 7.2; 9.6; 19.2; 38.4; 57.6; 115.2; 187.5; 230.4; 500; 1000 kbps
Connection method	Plug-in/screw connection via COMBICON
Transmission length	≤ 1200 m
Termination resistor	390 Ω (configurable)
	180 Ω
	390 Ω
File format/coding	UART/NRZ: 7/8 Bit Data, 1/2 Bit Stopp, None/Even/Odd Parity
Data flow control/protocols	Automatic control

FL COMSERVER UNI 232/422/485 - Interface converters

2313452

https://www.phoenixcontact.com/pc/products/2313452

Data: RS-485 interface, in acc. with EIA/TIA-485, DIN 66259-4/RS-485 2-wire

Serial transmission speed	0.3; 0.6; 1.2; 2.4; 4.8; 7.2; 9.6; 19.2; 38.4; 57.6; 115.2; 187.5; 230.4; 500; 1000 kbps
Connection method	Plug-in/screw connection via COMBICON
Termination resistor	390 Ω
	180 Ω
	390 Ω (configurable)
File format/coding	UART/NRZ: 7/8 Bit Data, 1/2 Bit Stopp, None/Even/Odd Parity
Data flow control/protocols	Automatic control

Dimensions

Width	22.5 mm
Height	99 mm
Depth	116 mm

Material specifications

Color (Housing)	green (RAL 6021)
Material (Housing)	PA 6.6-FR

Mechanical tests

Free fall in acc. with IEC 60068-2-32	: 1 m
Vibration resistance in accordance with EN 60068-2-6/IEC 60068-2-6	Vibration (operation): 5g, 10...150 Hz, 2.5 h, in XYZ direction
Shock in accordance with EN 60068-2-27/IEC 60068-2-27	Shock (operation): 15g, 11 ms period, half-sine shock pulse
	Shock (storage/transport): 30g, 11 ms period, half-sine shock pulse

Environmental and real-life conditions

Ambient conditions

Degree of protection	IP20
Ambient temperature (operation)	-25 °C ... 60 °C
	-20 °C ... 60 °C (in acc. with UL)
Ambient temperature (storage/transport)	-25 °C ... 70 °C
Altitude	≤ 5000 m (For restrictions, see the manufacturer's declaration for altitude operation)
Permissible humidity (operation)	10 % ... 95 % (non-condensing)
Permissible humidity (storage/transport)	5 % ... 95 % (non-condensing)

Approvals

CE

Certificate	CE-compliant

ATEX

Identification	Ⓔx II 3 G Ex ec IIC T4 Gc
Certificate	PxCIF11ATEX2313478X

chanhvinh.com

FL COMSERVER UNI 232/422/485 - Interface converters

2313452

https://www.phoenixcontact.com/pc/products/2313452

Note	Please follow the special installation instructions in the documentation!

UL, USA/Canada

Identification	508 Listed
	Class I, Div. 2, Groups A, B, C, D

UL, USA

Identification	Class I, Zone 2, AEx nA IIC T5

UL, Canada

Identification	Class I, Zone 2, Ex nA IIC T5 Gc X

KC approval for South Korea

Certificate	MSIP-REI-PCK-2313452

Corrosive gas test

Identification	ISA-S71.04-1985 G3 Harsh Group A

EMC data

Electromagnetic compatibility	Conformance with EMC Directive 2014/30/EU
Noise immunity	EN 61000-6-2:2005
Noise emission	EN 61000-6-4

Electrostatic discharge

Standards/regulations	EN 61000-4-2

Electrostatic discharge

Contact discharge	± 6 kV
Discharge in air	± 8 kV
Comments	Criterion B

Electromagnetic HF field

Standards/regulations	EN 61000-4-3

Electromagnetic HF field

Field intensity	10 V/m
Comments	Criterion A

Fast transients (burst)

Standards/regulations	EN 61000-4-4

Fast transients (burst)

Input	2 kV (5 kHz)
Signal	1 kV (5 kHz)
Comments	Criterion A

Surge current load (surge)

Standards/regulations	EN 61000-4-5

chanhvinh.com

FL COMSERVER UNI 232/422/485 - Interface converters

2313452

https://www.phoenixcontact.com/pc/products/2313452

Surge current load (surge)

Input	2 kV
Signal	1 kV
Comments	Criterion B

Conducted interference

Standards/regulations	EN 61000-4-6

Conducted interference

Comments	Criterion A
Voltage	10 V

Emitted interference

Standards/regulations	EN 55032

Criteria

Criterion A	Normal operating behavior within the specified limits.
Criterion B	Temporary impairment to operational behavior that is corrected by the device itself.

Standards and regulations

Free from substances that could impair the application of coating	VDMA 24364:2018-05
Standards/regulations	EN 50121-4

Mounting

Mounting type	DIN rail mounting
Assembly note	The product can be snapped onto all 35 mm DIN rails in accordance with EN 60715.

chanhvinh.com

FL COMSERVER UNI 232/422/485 - Interface converters

2313452

https://www.phoenixcontact.com/pc/products/2313452

Drawings

Connection diagram

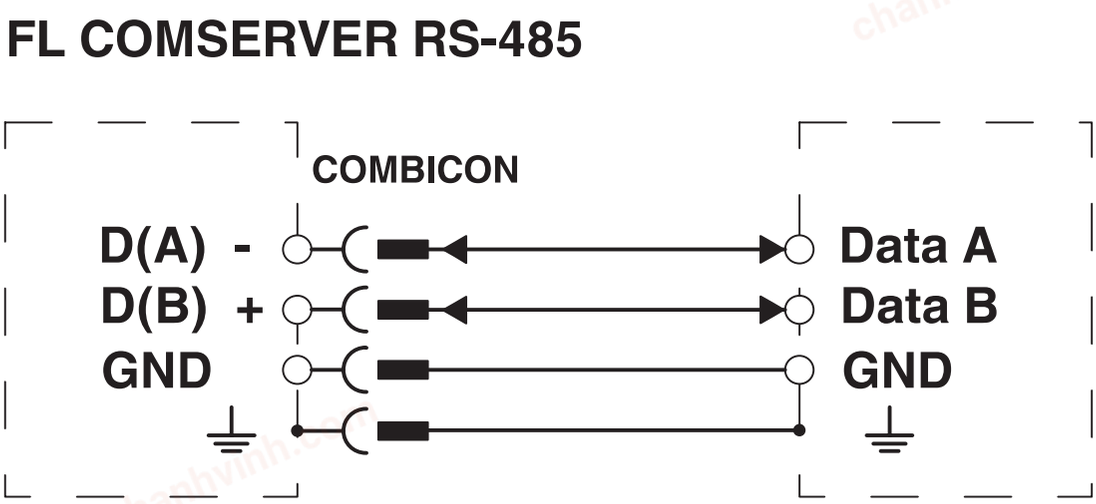

RS-485 connection

Application drawing

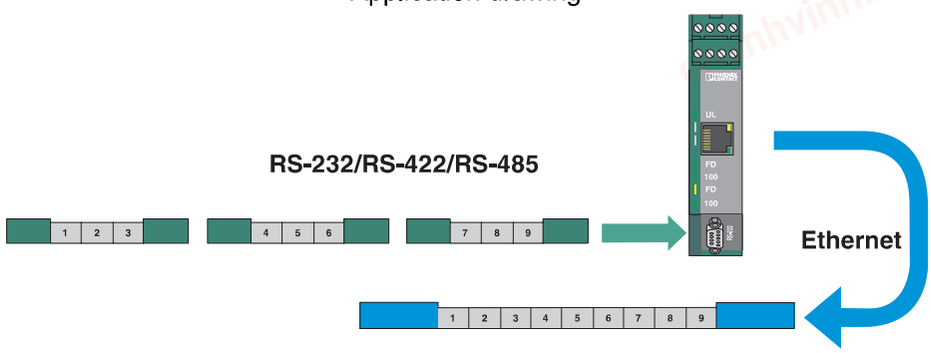

Large value: "Idle Force Timeout Characters"

chanhvinh.com

FL COMSERVER UNI 232/422/485 - Interface converters

2313452

https://www.phoenixcontact.com/pc/products/2313452

Connection diagram

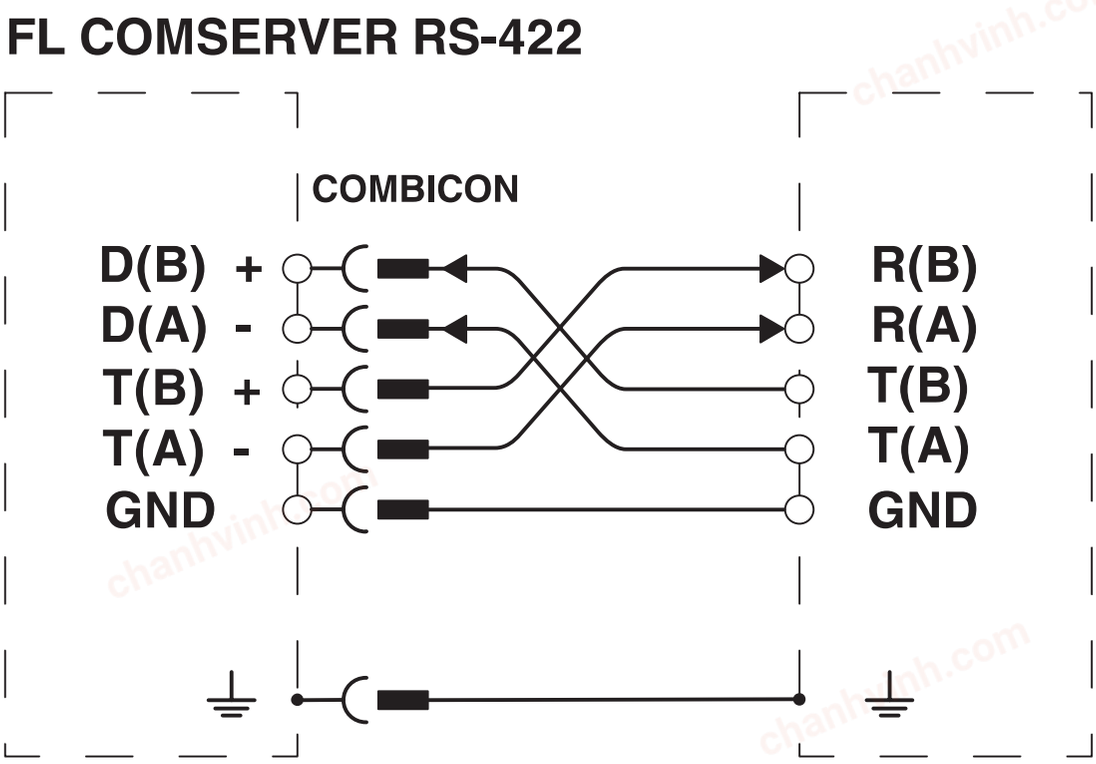

RS-422 connection

Application drawing

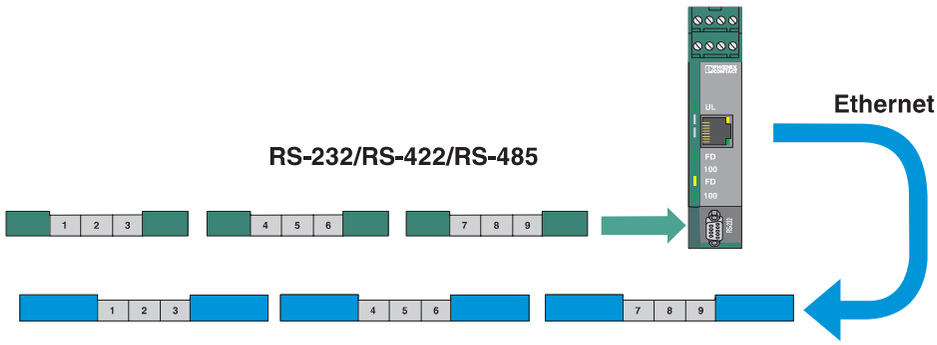

Small value: "Idle Force Timeout Characters"

chanhvinh.com

FL COMSERVER UNI 232/422/485 - Interface converters

2313452

https://www.phoenixcontact.com/pc/products/2313452

Application drawing

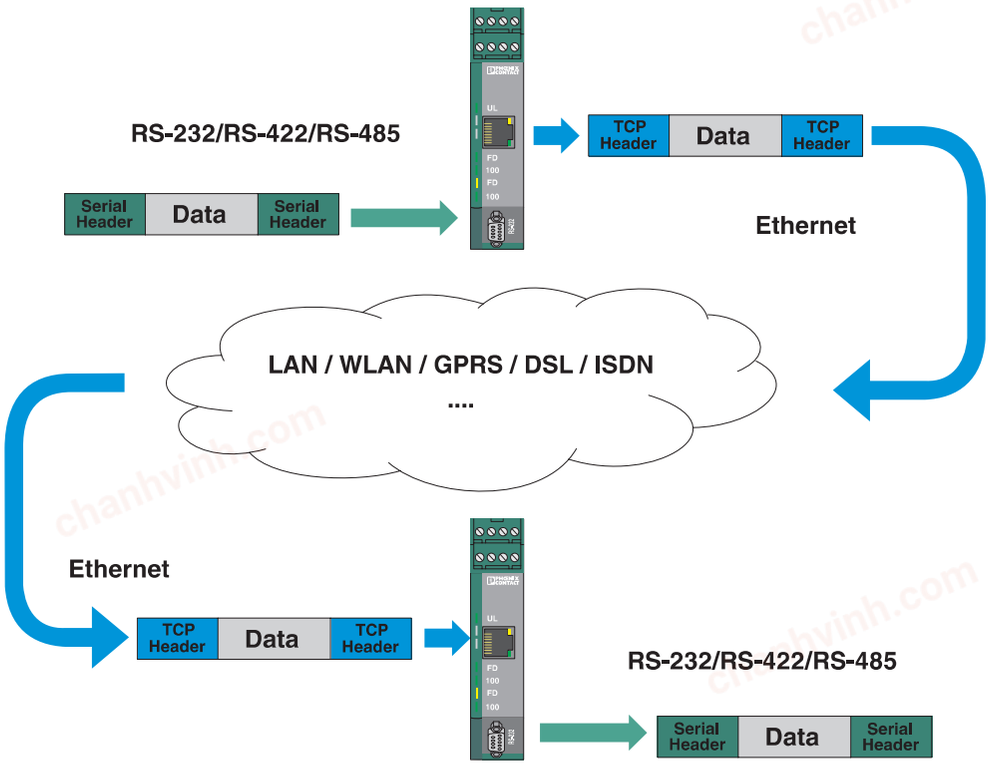

Serial data transmission via Ethernet

chanhvinh.com

FL COMSERVER UNI 232/422/485 - Interface converters

2313452

https://www.phoenixcontact.com/pc/products/2313452

Approvals

To download certificates, visit the product detail page: https://www.phoenixcontact.com/pc/products/2313452

EAC
Approval ID: RU D-DE.GB09.B.00312

UL Listed
Approval ID: E238705

cUL Listed
Approval ID: E238705

KC
Approval ID: MSIP-REI-PCK-2313452

cUL Listed
Approval ID: E199827

UL Listed
Approval ID: E199827

cULus Listed

cULus Listed

chanhvinh.com

FL COMSERVER UNI 232/422/485 - Interface converters

2313452

https://www.phoenixcontact.com/pc/products/2313452

Classifications

ECLASS

ECLASS-11.0	27242208
ECLASS-12.0	27242208
ECLASS-13.0	27242208

ETIM

ETIM 9.0	EC001423

UNSPSC

UNSPSC 21.0	43222600

chanhvinh.com

FL COMSERVER UNI 232/422/485 - Interface converters

2313452

https://www.phoenixcontact.com/pc/products/2313452

Environmental product compliance

EU RoHS

Fulfills EU RoHS substance requirements	Yes
Exemption	6(c), 7(a), 7(c)-I

China RoHS

Environment friendly use period (EFUP)	EFUP-50
	An article-related China RoHS declaration table can be found in the download area for the respective article under "Manufacturer declaration". For all articles with EFUP-E, no China RoHS declaration table issued and required.

EU REACH SVHC

REACH candidate substance (CAS No.)	Lead(CAS: 7439-92-1)
SCIP	19a2f08d-521a-4fb9-860d-39c82142c9b4

EF3.0 Climate Change

CO2e kg	17.23 kg CO2e

Phoenix Contact 2025 © - all rights reserved
https://www.phoenixcontact.com

PHOENIX CONTACT GmbH & Co. KG
Flachsmarktstraße 8
D-32825 Blomberg
+49 (0) 5235-3 00
info@phoenixcontact.com