chanhvinh.com

https://www.phoenixcontact.com/gb/products/2308030

Universal current transducer - MCR-SL-CUC-200-I - 2308030

Please be informed that the data shown in this PDF Document is generated from our Online Catalog. Please find the complete data in the user's documentation. Our General Terms of Use for Downloads are valid (http://phoenixcontact.com/download)



The MCR-SL-CUC-100-I is illustrated

Universal current transducer, for measuring AC, DC, and distorted currents, 0 ... 200 A input current, 4 ... 20 mA output

Why buy this product

- Variable mounting on DIN rail and mounting plate
- Simple connection technology thanks to COMBICON plug-in connection terminal blocks
- Compact dimensions also enable distributed use
- Universal current measurement, no shunt required
- 3-way isolation

Key commercial data

Packing unit	1 pc
GTIN	4 046356 434058
Weight per Piece (excluding packing)	294.4 g
Custom tariff number	90303310
Country of origin	China

Technical data

Dimensions

Width	90 mm
Height	33.8 mm
Depth	85 mm

Ambient conditions

Ambient temperature (operation)	-40 °C ... 65 °C
Ambient temperature (storage/transport)	-40 °C ... 85 °C
Degree of protection	IP20

chanhvinh.com

Universal current transducer - MCR-SL-CUC-200-I - 2308030

Technical data

Input data

Input current range	0 A ... 200 A
Overload capacity	3 x I_{IN}
Frequency measuring range	20 Hz ... 6000 Hz (0 Hz)
Connection method	Cable design: 32 mm diameter

Output data

Output name	Current output
Current output signal	4 mA ... 20 mA
Max. output current	< 25 mA
Load/output load current output	< 300 Ω

Switching output

Output name	No switching output

Power supply

Nominal supply voltage	24 V DC
Supply voltage range	20 V DC ... 30 V DC
Max. current consumption	(30 + I_{OUT}) mA
Power consumption	1.65 W

Connection data

Conductor cross section solid min.	0.25 mm²
Conductor cross section solid max.	2.5 mm²
Conductor cross section AWG min.	24
Conductor cross section AWG max.	12
Conductor cross section flexible min.	0.2 mm²
Conductor cross section flexible max.	2.5 mm²
Stripping length	10 mm

General

Maximum transmission error	<± 1 % (of final value)
Temperature coefficient, typical	0.02 %/K (0 ... 60°C)
	0.04 %/K (-40 ... 65°C)
Linearity error	<± 1 % (From the range end value)
Step response (10-90%)	150 ms
Surge voltage category	III
Pollution degree	2
Rated insulation voltage	300 V AC
Test voltage input/output	3.5 kV (50 Hz, 1 min.)
Test voltage input/power supply	3.5 kV (50 Hz, 1 min.)
Noise emission	EN 61000-6-4
Noise immunity	EN 61000-6-2
Color	green

chanhvinh.com

Universal current transducer - MCR-SL-CUC-200-I - 2308030

Technical data

General

Housing material	Frianyl B63 V0 GV30
Conformance	CE-compliant
UL, USA / Canada	UL/C-UL listed UL 508

Classifications

eCl@ss

eCl@ss 4.0	27200303
eCl@ss 4.1	27200303
eCl@ss 5.0	27200303
eCl@ss 5.1	27200303
eCl@ss 6.0	27200303
eCl@ss 7.0	27142316

ETIM

ETIM 3.0	EC002475
ETIM 4.0	EC002048
ETIM 5.0	EC002048

UNSPSC

UNSPSC 6.01	30211504
UNSPSC 7.0901	39121006
UNSPSC 11	39121006
UNSPSC 12.01	39121006
UNSPSC 13.2	39121006

Approvals

Approvals

Approvals

UL Listed / cUL Listed / EAC / EAC / cULus Listed

Ex Approvals

Approvals submitted

Approval details

chanhvinh.com

Universal current transducer - MCR-SL-CUC-200-I - 2308030

Approvals

UL Listed

cUL Listed

EAC

EAC

cULus Listed

Drawings

Application drawing

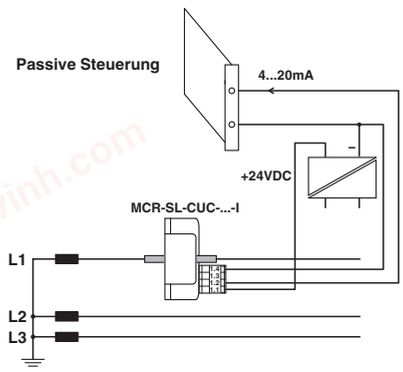

Dimensional drawing

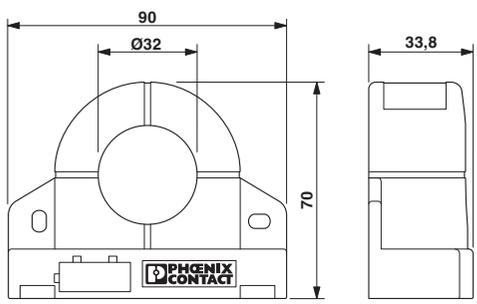

Current monitoring

chanhvinh.com

Universal current transducer - MCR-SL-CUC-200-I - 2308030

Circuit diagram

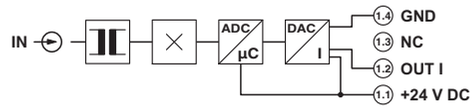

Schematic diagram

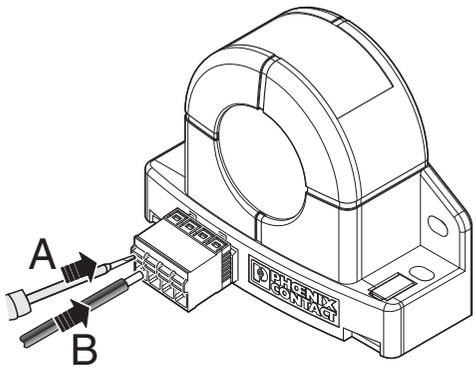

Phoenix Contact 2015 © - all rights reserved
http://www.phoenixcontact.com