chanhvinh.com

SAC-4P-M12MS/ 2,0-PUR/M12FS - Sensor/actuator cable

1693571

https://www.phoenixcontact.com/pc/products/1693571

Please be informed that the data shown in this PDF document is generated from our online catalog. Please find the complete data in the user documentation. Our general terms of use for downloads are valid.



Sensor/actuator cable, 4-position, PUR halogen-free, black-gray RAL 7021, Plug straight M12, coding: A, on Socket straight M12, coding: A, cable length: 2 m

Your advantages

- Easy and safe: 100 % electrically tested plug-in components

Commercial data

Item number	1693571
Packing unit	1 pc
Minimum order quantity	1 pc
Product key	AF1CCA
GTIN	4017918445683
Weight per piece (including packing)	68.5 g
Weight per piece (excluding packing)	69.4 g
Customs tariff number	85444290
Country of origin	DE

chanhvinh.com

SAC-4P-M12MS/ 2,0-PUR/M12FS - Sensor/actuator cable

1693571

https://www.phoenixcontact.com/pc/products/1693571

Technical data

Product properties

Product type	Sensor/actuator cable
Application	Standard
Number of positions	4
No. of cable outlets	1
Shielded	no
Coding	A

Insulation characteristics

Overvoltage category	II
Degree of pollution	3

Material specifications

Flammability rating according to UL 94	HB
Seal material	NBR
Material of grip body	TPU, hardly inflammable, self-extinguishing
Contact material	CuSn
Contact surface material	Ni/Au
Contact carrier material	TPU GF
Material for screw connection	Zinc die-cast, nickel-plated

Electrical properties

Insulation resistance	≥ 100 MΩ
Nominal voltage U_N	250 V AC
	250 V DC
Nominal current I_N	4 A

Mechanical properties

Mechanical data

Insertion/withdrawal cycles	≥ 100

Signaling

Status display	no
Status display present	No

Connection data

Conductor connection

Tightening torque	0.4 Nm (M12 connector)

Connector

Connection 1

SAC-4P-M12MS/ 2,0-PUR/M12FS - Sensor/actuator cable

1693571

https://www.phoenixcontact.com/pc/products/1693571

Type	Plug straight M12
Number of positions	4
Coding type	A

Connection 2

Type	Socket straight M12
Number of positions	4
Coding type	A

Cable/line

Cable length	2 m

PUR halogen-free black [PUR]

Dimensional drawing	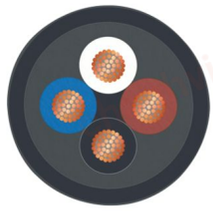
Cable weight	30 kg/km
UL AWM Style	20549 / 10493 (80°C/300 V)
Number of positions	4
Shielded	no
Cable type	PUR halogen-free black [PUR]
Conductor structure signal line	42x 0.10 mm
AWG signal line	22
Conductor cross section	4x 0.34 mm² (Signal line)
Wire diameter incl. insulation	1.27 mm ±0.02 mm
External cable diameter	4.20 mm ±0.15 mm
Outer sheath, material	PUR
External sheath, color	black-gray RAL 7021
Conductor material	Bare Cu litz wires
Material wire insulation	PP
Single wire, color	brown, white, blue, black
Thickness, insulation	≥ 0.21 mm
Thickness, outer sheath	approx. 0.50 mm
Overall twist	4 wires, twisted
Max. conductor resistance	≤ 58 Ω/km
Insulation resistance	≥ 1 GΩ*km
Nominal voltage, cable	≤ 300 V
Test voltage	≥ 3000 V
Minimum bending radius, fixed installation	5 x D
Minimum bending radius, flexible installation	10 x D

chanhvinh.com

SAC-4P-M12MS/ 2,0-PUR/M12FS - Sensor/actuator cable

1693571

https://www.phoenixcontact.com/pc/products/1693571

Smallest bending radius, fixed installation	21 mm
Smallest bending radius, movable installation	42 mm
Dynamic load capacity (bending)	Max. bending cycles: 10000000, Bending radius: 42 mm, Bending radius: 10 x D, Traversing path: 10 m, Traversing rate: 3 m/s, Acceleration: 10 m/s²
Dynamic load capacity (torsion)	Torsion: ±360 °/m, Torsion cycles: ≥5000000
Halogen-free	in accordance with DIN VDE 0472 part 815
	in accordance with DIN EN 50267-2-1
Flame resistance	in accordance with UL 758/1581 FT2
	DIN EN 60332-2-2 (20 s)
Resistance to oil	in accordance with DIN EN 60811-2-1
Other resistance	Highly resistant to acids, alkaline solutions and solvents
	hydrolysis and microbe resistant
	partly UV-resistant (in accordance with DIN EN ISO 4892-2-A)
	Low adhesion
	abrasion-resistant
Special properties	Flexible cable conduit capable
	Silicone-free
	Free of substances which would hinder coating with paint or varnish
	flexible
Ambient temperature (operation)	-40 °C ... 80 °C (cable, fixed installation)
	-25 °C ... 80 °C (Cable, flexible installation)

Environmental and real-life conditions

Ambient conditions

Degree of protection	IP65
	IP67
	IP68
Ambient temperature (operation)	-25 °C ... 90 °C (Plug / socket)

Standards and regulations

Standard designation	M12 connector
Standards/specifications	IEC 61076-2-101

chanhvinh.com

SAC-4P-M12MS/ 2,0-PUR/M12FS - Sensor/actuator cable

1693571

https://www.phoenixcontact.com/pc/products/1693571

Drawings

Dimensional drawing

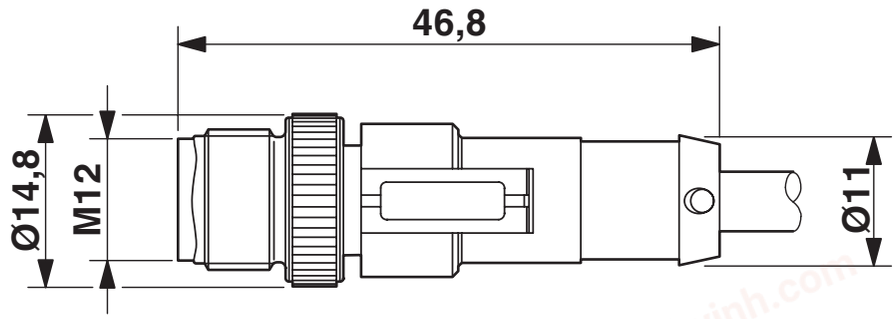

Plug, M12 x 1, straight, shielded

Dimensional drawing

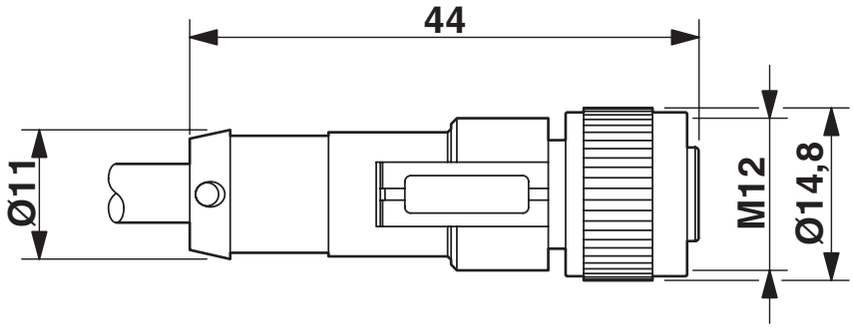

M12 x 1 socket, straight

chanhvinh.com

SAC-4P-M12MS/ 2,0-PUR/M12FS - Sensor/actuator cable

1693571

https://www.phoenixcontact.com/pc/products/1693571

Schematic diagram

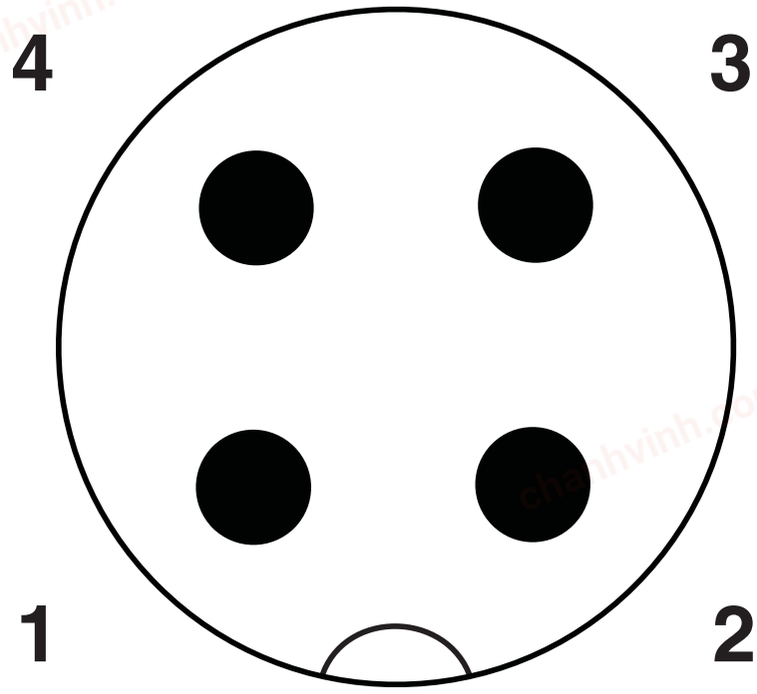

Pin assignment M12 plug, 4-pos., A-coded, view plug side

chanhvinh.com

SAC-4P-M12MS/ 2,0-PUR/M12FS - Sensor/actuator cable

1693571

https://www.phoenixcontact.com/pc/products/1693571

Schematic diagram

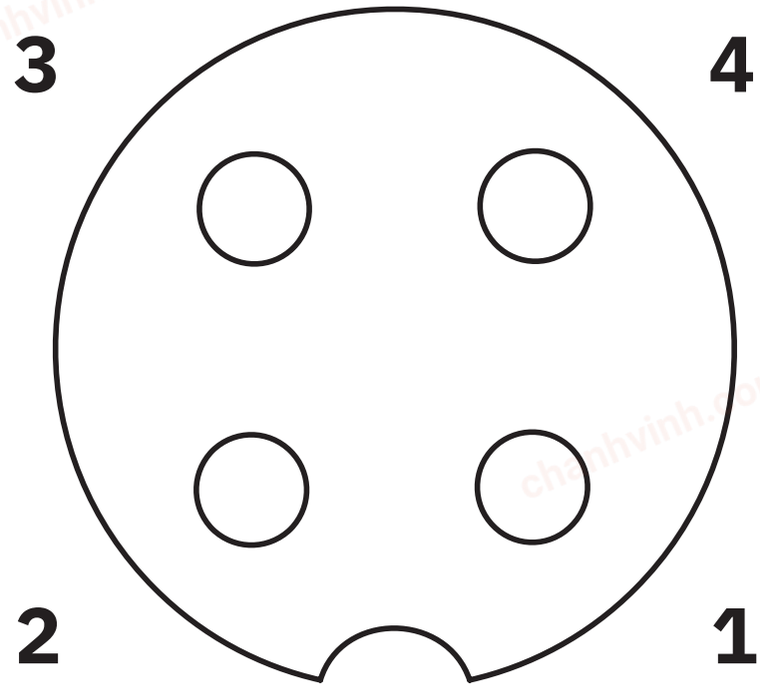

Pin assignment M12 socket, 4-pos., A-coded, view female side

Circuit diagram

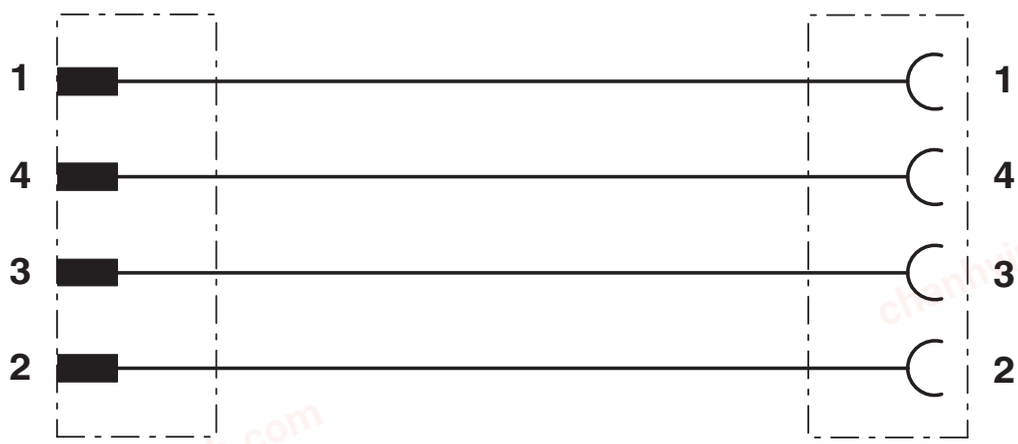

Contact assignment of the M12 connector and the M12 socket

chanhvinh.com

SAC-4P-M12MS/ 2,0-PUR/M12FS - Sensor/actuator cable

1693571

https://www.phoenixcontact.com/pc/products/1693571

Approvals

To download certificates, visit the product detail page: https://www.phoenixcontact.com/pc/products/1693571

UL Listed
Approval ID: FILE E 221474

	Nominal voltage U_N	Nominal current I_N	Cross section AWG	Cross section mm^2
	300 V	4 A	-	-

cUL Listed
Approval ID: FILE E 221474

	Nominal voltage U_N	Nominal current I_N	Cross section AWG	Cross section mm^2
	300 V	4 A	-	-

EAC-RoHS
Approval ID: RU D-DE.HB35.B.00387

cULus Listed

chanhvinh.com

SAC-4P-M12MS/ 2,0-PUR/M12FS - Sensor/actuator cable

1693571

https://www.phoenixcontact.com/pc/products/1693571

Classifications

ECLASS

ECLASS-11.0	27060311
ECLASS-12.0	27060311
ECLASS-13.0	27060311

ETIM

ETIM 9.0	EC001855

UNSPSC

UNSPSC 21.0	26121600

chanhvinh.com

SAC-4P-M12MS/ 2,0-PUR/M12FS - Sensor/actuator cable

1693571

https://www.phoenixcontact.com/pc/products/1693571

Environmental product compliance

EU RoHS

Fulfills EU RoHS substance requirements	Yes, No exemptions

China RoHS

Environment friendly use period (EFUP)	EFUP-E
	No hazardous substances above the limits

EU REACH SVHC

REACH candidate substance (CAS No.)	No substance above 0.1 wt%

EF3.0 Climate Change

CO2e kg	1.138 kg CO2e

Phoenix Contact 2025 © - all rights reserved
https://www.phoenixcontact.com

PHOENIX CONTACT GmbH & Co. KG
Flachsmarktstraße 8
D-32825 Blomberg
+49 (0) 5235-3 00
info@phoenixcontact.com