chanhvinh.com

SAC-5P-M12MS/ 1,0-920/M12FS - Bus system cable

1507544

https://www.phoenixcontact.com/pc/products/1507544

Please be informed that the data shown in this PDF document is generated from our online catalog. Please find the complete data in the user documentation. Our general terms of use for downloads are valid.



Bus system cable, CANopen®, DeviceNet™, 5-position, PUR halogen-free, red lilac RAL 4001, shielded, Plug straight M12, coding: A, on Socket straight M12, coding: A, cable length: 1 m

Commercial data

Item number	1507544
Packing unit	1 pc
Minimum order quantity	1 pc
Product key	AF1CKD
Catalog page	Page 433 (C-2-2019)
GTIN	4017918900335
Weight per piece (including packing)	95 g
Weight per piece (excluding packing)	91.6 g
Customs tariff number	85444290
Country of origin	PL

chanhvinh.com

SAC-5P-M12MS/ 1,0-920/M12FS - Bus system cable

1507544

https://www.phoenixcontact.com/pc/products/1507544

Technical data

Notes

General	Further products with variable cable lengths can be found in the accessories section

Product properties

Product type	Data cable preassembled
Application	Standard
Sensor type	CANopen®
Number of positions	5
No. of cable outlets	1
Shielded	yes
Coding	A

Insulation characteristics

Overvoltage category	II
Degree of pollution	3

Interfaces

Bus system	CANopen®/DeviceNet™
Signal type/category	CANopen®
	DeviceNet™

Signaling

Status display	no
Status display present	No

Electrical properties

Insulation resistance	≥ 100 MΩ
Nominal voltage U_N	48 V AC
	60 V DC
Nominal current I_N	4 A
Transmission medium	Copper

Mechanical properties

Mechanical data

Insertion/withdrawal cycles	≥ 100

Material specifications

Flammability rating according to UL 94	HB
Seal material	NBR
Material of grip body	TPU, hardly inflammable, self-extinguishing
Contact material	CuSn

chanhvinh.com

SAC-5P-M12MS/ 1,0-920/M12FS - Bus system cable

1507544

https://www.phoenixcontact.com/pc/products/1507544

Contact surface material	Ni/Au
Contact carrier material	TPU GF
Material for screw connection	Zinc die-cast, nickel-plated

Connection data

Pin assignment

Contact | Color (signal designation) | Contact (optional)	
	1 (Plug) | SR (shield) | 1 (Socket)
	2 (Plug) | RD (V+) | 2 (Socket)
	3 (Plug) | BK (V-) | 3 (Socket)
	4 (Plug) | WH (CAN_H) | 4 (Socket)
	5 (Plug) | BU (CAN_L) | 5 (Socket)

Connector

Connection 1

Type	Plug straight M12
Number of positions	5
Coding type	A (Standard)
Ambient temperature (operation)	-25 °C ... 90 °C

Connection 2

Type	Socket straight M12
Number of positions	5
Coding type	A (Standard)
Ambient temperature (operation)	-25 °C ... 90 °C

Cable/line

Cable length	1 m

CANopen®/DeviceNet™, PUR, violet [920]

Dimensional drawing	
UL AWM Style	21198 (80°C/300 V)
Number of positions	4
Shielded	yes
Cable type	CANopen®/DeviceNet™, PUR, violet [920]
Conductor structure	2xAWG24/19+2xAWG22/19
AWG signal line	24
AWG power supply	22

chanhvinh.com

SAC-5P-M12MS/ 1,0-920/M12FS - Bus system cable

1507544

https://www.phoenixcontact.com/pc/products/1507544

Conductor cross section	2x 0.25 mm² (Data cable)
	2x 0.34 mm² (Power supply)
	1x 0.34 mm² (Drain wire)
Wire diameter incl. insulation	1.95 mm ±0.05 mm (Data cable)
	1.4 mm ±0.05 mm (Power supply)
External cable diameter	6.70 mm ±0.3 mm
Outer sheath, material	PUR
External sheath, color	red lilac RAL 4001
Conductor material	Tin-plated Cu litz wires
Material wire insulation	Foamed PE (Data cable)
	PE (Power supply)
Single wire, color	red-black, blue-white
Twisted pairs	2 cores to the pair
Overall twist	2 pairs around a drain wire in the center to the core
Optical shield covering	80 %
Insulation resistance	≥ 5 GΩ*km (Data cable)
	≥ 5 GΩ*km (Power supply)
Wave impedance	120 Ω ±10 % (with 1 MHz)
Nominal voltage, cable	≤ 300 V (Peak value, not for high-power applications)
Test voltage Core/Core	2000 V (50 Hz, 1 min.)
Test voltage Core/Shield	2000.00 V (50 Hz, 1 min.)
Minimum bending radius, fixed installation	4 x D
Minimum bending radius, flexible installation	8 x D
Dynamic load capacity (bending)	Max. bending cycles: 5000000, Bending radius: 70 mm, Bending radius: 15 x D, Traversing path: 4.5 m, Traversing rate: 3 m/s, Acceleration: 3 m/s², Ambient temperature: -20 °C ... 60 °C
Shield attenuation	≤ 22.9 dB/km (with 1 MHz)
	≤ 16.4 dB/km (At 500 kHz)
	≤ 9.5 dB/km (At 125 kHz)
Halogen-free	in accordance with DIN VDE 0472 part 815
	according to IEC 60754-1
Flame resistance	UL 1581, Section 1060 and UL 2556, Section 9.3 (FT1)
	UL 1581, Section 1100 and UL 2556, Section 9.1 (HFT/FT2)
	IEC 60332-1-2
	in accordance with ISO 6722-1 5.22 (UN ECE-R 118.01)
Ambient temperature (operation)	-40 °C ... 80 °C (cable, fixed installation)
	-30 °C ... 70 °C (Cable, flexible installation)
	-20 °C ... 60 °C (for installation)
	-20 °C ... 60 °C (cable, drag chain applications)

Environmental and real-life conditions

Ambient conditions

Degree of protection	IP65
	IP67

chanhvinh.com

SAC-5P-M12MS/ 1,0-920/M12FS - Bus system cable

1507544

https://www.phoenixcontact.com/pc/products/1507544

Drawings

Dimensional drawing

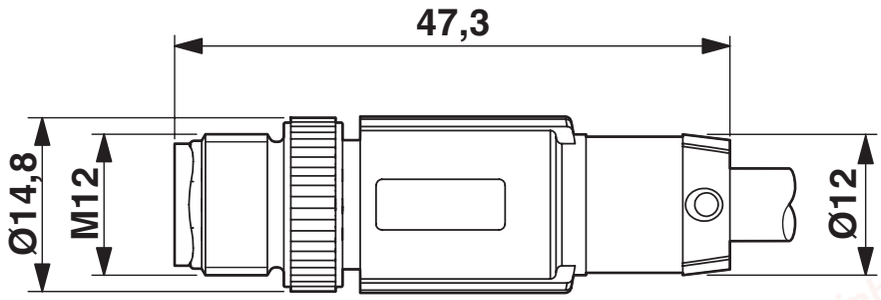

Plug, M12 x 1, straight, shielded

Dimensional drawing

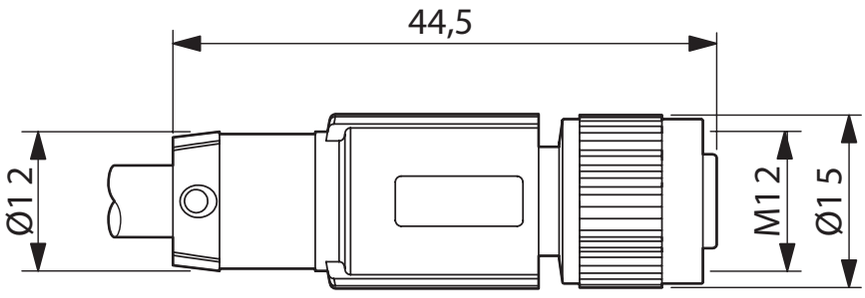

M12 x 1 socket, straight, shielded

chanhvinh.com

SAC-5P-M12MS/ 1,0-920/M12FS - Bus system cable

1507544

https://www.phoenixcontact.com/pc/products/1507544

Schematic diagram

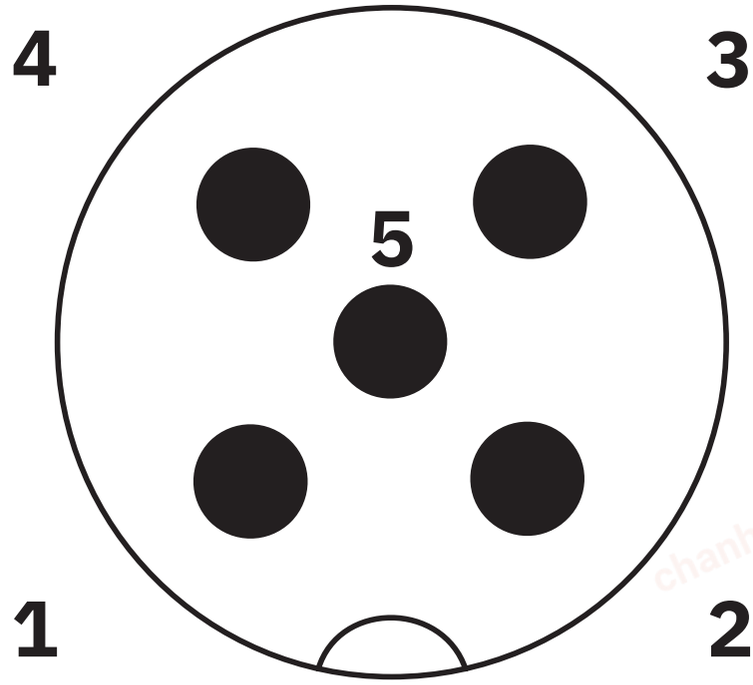

Pin assignment M12 male connector, 5-pos., A-coded, male side

Schematic diagram

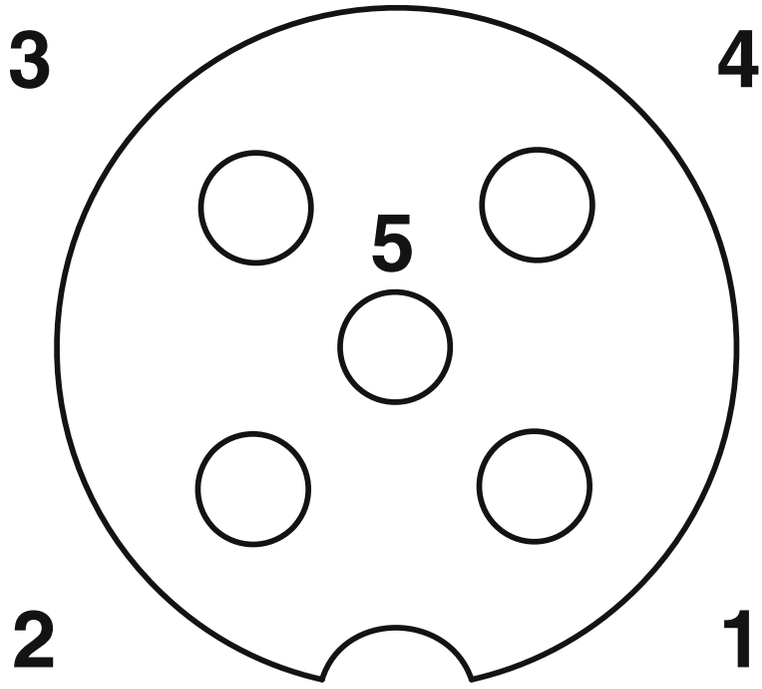

Pin assignment M12 socket, 5-pos., A-coded, socket side view

chanhvinh.com

SAC-5P-M12MS/ 1,0-920/M12FS - Bus system cable

1507544

https://www.phoenixcontact.com/pc/products/1507544

Circuit diagram

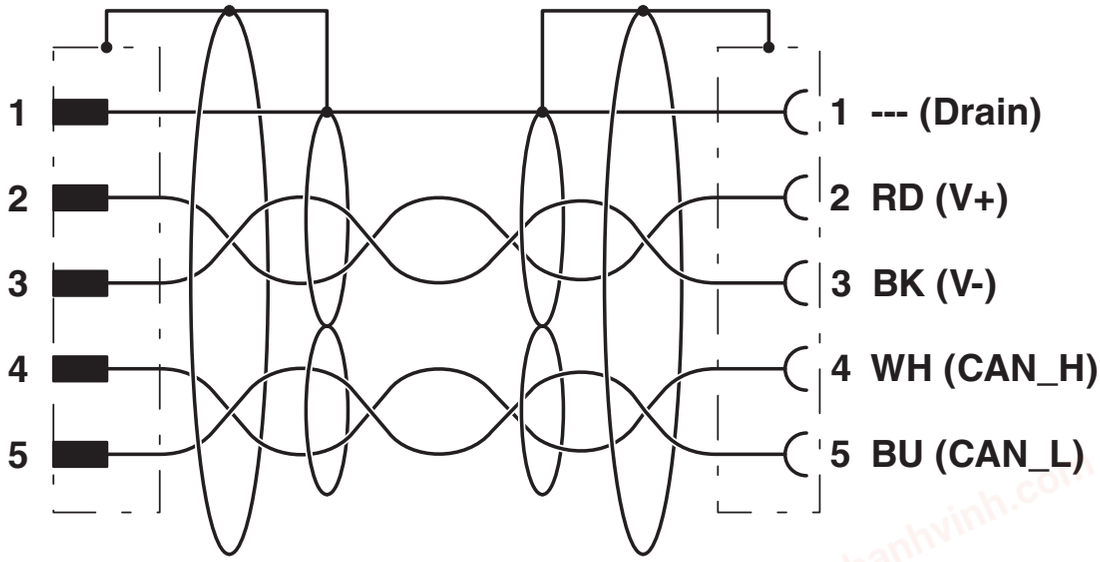

Contact assignment of the M12 connector and the M12 socket

chanhvinh.com

SAC-5P-M12MS/ 1,0-920/M12FS - Bus system cable

1507544

https://www.phoenixcontact.com/pc/products/1507544

Approvals

To download certificates, visit the product detail page: https://www.phoenixcontact.com/pc/products/1507544

UL Listed
Approval ID: FILE E 221474

	Nominal voltage U_N	Nominal current I_N	Cross section AWG	Cross section mm^2
	125 V	4 A	-	-

cUL Listed
Approval ID: FILE E 221474

	Nominal voltage U_N	Nominal current I_N	Cross section AWG	Cross section mm^2
	125 V	4 A	-	-

EAC-RoHS
Approval ID: RU D-DE.HB35.B.00387

cULus Listed

chanhvinh.com

SAC-5P-M12MS/ 1,0-920/M12FS - Bus system cable

1507544

https://www.phoenixcontact.com/pc/products/1507544

Classifications

ECLASS

ECLASS-11.0	27060307
ECLASS-12.0	27060307
ECLASS-13.0	27060307

ETIM

ETIM 9.0	EC001855

UNSPSC

UNSPSC 21.0	26121600

chanhvinh.com

SAC-5P-M12MS/ 1,0-920/M12FS - Bus system cable

1507544

https://www.phoenixcontact.com/pc/products/1507544

Environmental product compliance

EU RoHS

Fulfills EU RoHS substance requirements	Yes, No exemptions

China RoHS

Environment friendly use period (EFUP)	EFUP-E
	No hazardous substances above the limits

EU REACH SVHC

REACH candidate substance (CAS No.)	No substance above 0.1 wt%

EF3.0 Climate Change

CO2e kg	0.608 kg CO2e

Phoenix Contact 2025 © - all rights reserved
https://www.phoenixcontact.com

PHOENIX CONTACT GmbH & Co. KG
Flachsmarktstraße 8
D-32825 Blomberg
+49 (0) 5235-3 00
info@phoenixcontact.com