chanhvinh.com

SAC-5P- 5,0-PVC/M12FR - Sensor/actuator cable

1415688

https://www.phoenixcontact.com/gb/products/1415688

Please be informed that the data shown in this PDF document is generated from our online catalog. Please find the complete data in the user documentation. Our general terms of use for downloads are valid.



Sensor/actuator cable, 5-position, PVC, black RAL 9005, free cable end, on Socket angled M12, coding: A, cable length: 5 m

Your advantages

- Easy and safe: 100 % electrically tested plug-in components

Commercial data

Item number	1415688
Packing unit	1 pc
Minimum order quantity	1 pc
Sales key	BF1CDA
Product key	BF1CDA
Catalog page	Page 202 (C-2-2019)
GTIN	4055626050492
Weight per piece (including packing)	209 g
Weight per piece (excluding packing)	164.424 g
Customs tariff number	85444290
Country of origin	DE

chanhvinh.com

SAC-5P- 5,0-PVC/M12FR - Sensor/actuator cable

1415688

https://www.phoenixcontact.com/gb/products/1415688

Technical data

Product properties

Product type	Sensor/actuator cable
Application	Standard
Number of positions	5
No. of cable outlets	1
Shielded	no
Coding	A

Insulation characteristics

Overvoltage category	II
Degree of pollution	3

Material specifications

Flammability rating according to UL 94	HB
Seal material	NBR
Material of grip body	TPU, hardly inflammable, self-extinguishing
Contact material	CuSn
Contact surface material	Ni/Au
Contact carrier material	TPU GF
Material for screw connection	Zinc die-cast, nickel-plated

Electrical properties

Insulation resistance	≥ 100 MΩ
Nominal voltage U_N	48 V AC
	60 V DC
Nominal current I_N	4 A

Mechanical properties

Mechanical data

Insertion/withdrawal cycles	≥ 100

Signaling

Status display	no
Status display present	No

Connector

Connection 1

Type	free cable end

Connection 2

Type	Socket angled M12
Number of positions	5

chanhvinh.com

SAC-5P- 5,0-PVC/M12FR - Sensor/actuator cable

1415688

https://www.phoenixcontact.com/gb/products/1415688

Coding type	A

Cable/line

Cable length	5 m

PVC black [PVC]

Dimensional drawing	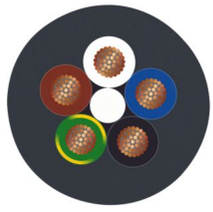
Cable weight	51 kg/km
UL AWM Style	2464 / 1729 (80°C/300 V)
Number of positions	5
Shielded	no
Cable type	PVC black [PVC]
Conductor structure signal line	19x 0.15 mm
AWG signal line	22
Conductor cross section	5x 0.34 mm² (Signal line)
Wire diameter incl. insulation	1.26 mm ±0.05 mm
External cable diameter	5.00 mm ±0.15 mm
Outer sheath, material	PVC
External sheath, color	black RAL 9005
Conductor material	Bare Cu litz wires
Material wire insulation	PVC
Single wire, color	brown, white, blue, black, green-yellow
Thickness, insulation	≥ 0.23 mm (Core insulation)
Thickness, outer sheath	≥ 0.76 mm
Overall twist	5 wires around filler to the core
Max. conductor resistance	max. 57 Ω/km (at 20 °C)
Insulation resistance	≥ 200 MΩ*km (at 20 °C)
Nominal voltage, cable	≤ 300 V
Test voltage	≥ 3000 V
Minimum bending radius, fixed installation	5 x D
Minimum bending radius, flexible installation	10 x D
Smallest bending radius, fixed installation	25 mm
Smallest bending radius, movable installation	50 mm
Flame resistance	As per UL-Style 2464
Resistance to oil	in accordance with DIN EN 60811-2-1
Ambient temperature (operation)	-25 °C ... 80 °C (cable, fixed installation)
	-10 °C ... 80 °C (Cable, flexible installation)

chanhvinh.com

SAC-5P- 5,0-PVC/M12FR - Sensor/actuator cable

1415688

https://www.phoenixcontact.com/gb/products/1415688

Environmental and real-life conditions

Ambient conditions

Degree of protection	IP65
	IP67
	IP68
Ambient temperature (operation)	-25 °C ... 90 °C (Plug / socket)

Standards and regulations

Standard designation	M12 connector
Standards/specifications	IEC 61076-2-101

chanhvinh.com

SAC-5P- 5,0-PVC/M12FR - Sensor/actuator cable

1415688

https://www.phoenixcontact.com/gb/products/1415688

Drawings

Schematic diagram

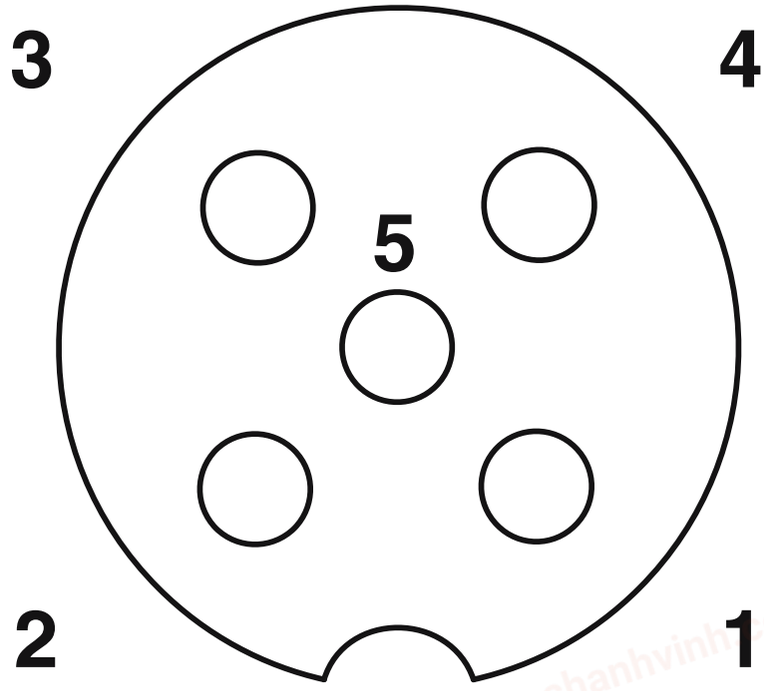

Pin assignment M12 socket, 5-pos., A-coded, socket side view

Dimensional drawing

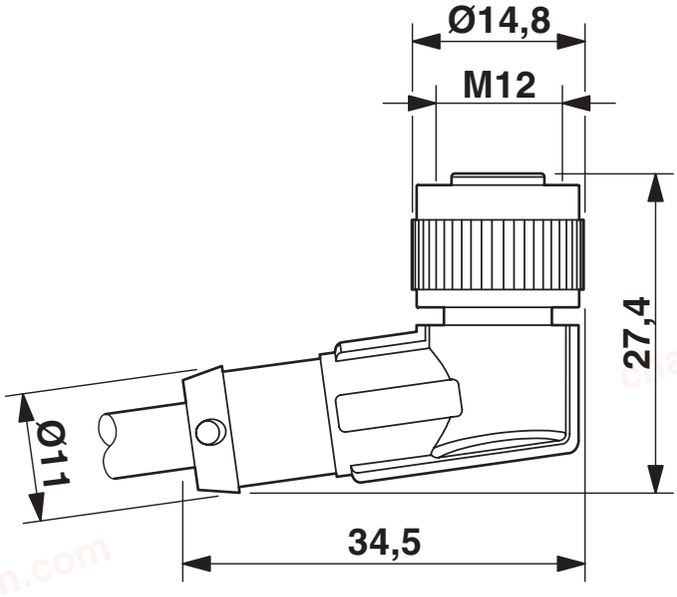

M12 x 1 socket, angled

chanhvinh.com

SAC-5P- 5,0-PVC/M12FR - Sensor/actuator cable

1415688

https://www.phoenixcontact.com/gb/products/1415688

Circuit diagram



chanhvinh.com

SAC-5P- 5,0-PVC/M12FR - Sensor/actuator cable

1415688

https://www.phoenixcontact.com/gb/products/1415688

Approvals

To download certificates, visit the product detail page: https://www.phoenixcontact.com/gb/products/1415688

UL Listed
Approval ID: FILE E 221474

	Nominal voltage U_N	Nominal current I_N	Cross section AWG	Cross section mm^2
	125 V	4 A	-	-

cUL Listed
Approval ID: FILE E 221474

	Nominal voltage U_N	Nominal current I_N	Cross section AWG	Cross section mm^2
	125 V	4 A	-	-

EAC-RoHS
Approval ID: RU D-DE.HB35.B.00387

cULus Listed

chanhvinh.com

SAC-5P- 5,0-PVC/M12FR - Sensor/actuator cable

1415688

https://www.phoenixcontact.com/gb/products/1415688

Classifications

ECLASS

ECLASS-11.0	27060311
ECLASS-12.0	27060311
ECLASS-13.0	27060311

ETIM

ETIM 9.0	EC001855

UNSPSC

UNSPSC 21.0	26121600

chanhvinh.com

SAC-5P- 5,0-PVC/M12FR - Sensor/actuator cable

1415688

https://www.phoenixcontact.com/gb/products/1415688

Environmental product compliance

EU RoHS

Fulfills EU RoHS substance requirements	Yes, No exemptions

China RoHS

Environment friendly use period (EFUP)	EFUP-E
	No hazardous substances above the limits

EU REACH SVHC

REACH candidate substance (CAS No.)	No substance above 0.1 wt%

EF3.0 Climate Change

CO2e kg	1.885 kg CO2e

Phoenix Contact 2024 © - all rights reserved
https://www.phoenixcontact.com

PHOENIX CONTACT Ltd
Halesfield 13, Telford
Shropshire, TF7 4PG
01952 681700
info@phoenixcontact.co.uk