chanhvinh.com

SAC-2P- 3,0-PUR/SUSFS - Sensor/actuator cable

1410749

https://www.phoenixcontact.com/gb/products/1410749

Please be informed that the data shown in this PDF document is generated from our online catalog. Please find the complete data in the user documentation. Our general terms of use for downloads are valid.



Sensor/actuator cable, 2-position, PUR halogen-free, black-gray RAL 7021, free cable end, on Socket straight Superseal Clip locking, coding: A, cable length: 3 m

Commercial data

Item number	1410749
Packing unit	1 pc
Minimum order quantity	1 pc
Sales key	BF1DWA
Product key	BF1DWA
Catalog page	Page 247 (C-2-2019)
GTIN	4046356924368
Weight per piece (including packing)	111.9 g
Weight per piece (excluding packing)	111.9 g
Customs tariff number	85444290
Country of origin	PL

chanhvinh.com

SAC-2P- 3,0-PUR/SUSFS - Sensor/actuator cable

1410749

https://www.phoenixcontact.com/gb/products/1410749

Technical data

Product properties

Product type	Sensor/actuator cable
Application	Mobile hydraulics
Number of positions	2
No. of cable outlets	1
Shielded	no
Coding	A

Data management status

Article revision	01

Material specifications

Flammability rating according to UL 94	HB
Seal material	Silicon
Material of grip body	TPU
Contact material	PhCuSn
Contact surface material	nickel-plated
Contact carrier material	PA 6.6
Material for screw connection	not available

Electrical properties

Insulation resistance	≥ 100 MΩ
Nominal voltage U_N	24 V AC
	24 V DC
Nominal current I_N	8 A

Signaling

Status display	no
Status display present	No

Connector

Connection 1

Type	free cable end

Connection 2

Type	Socket straight Superseal Clip locking
Number of positions	2
Locking type	Clip locking
Coding type	A

Cable/line

Cable length	3 m

SAC-2P- 3,0-PUR/SUSFS - Sensor/actuator cable

1410749

https://www.phoenixcontact.com/gb/products/1410749

PUR halogen-free black [PUR]

Dimensional drawing	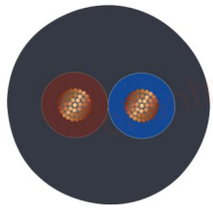
Cable weight	33 kg/km
UL AWM Style	20549 / 10493 (80°C/300 V)
Number of positions	2
Shielded	no
Cable type	PUR halogen-free black [PUR]
Conductor structure signal line	42x 0.15 mm
AWG signal line	18
Conductor cross section	2x 0.75 mm² (Signal line)
Wire diameter incl. insulation	1.69 mm ±0.05 mm (Signal line)
External cable diameter	4.80 mm ±0.15 mm
Outer sheath, material	PUR
External sheath, color	black-gray RAL 7021
Conductor material	Bare Cu litz wires
Material wire insulation	PP
Single wire, color	brown, blue
Thickness, insulation	≥ 0.21 mm
Thickness, outer sheath	≥ 0.38 mm
Overall twist	2 wires, twisted
Max. conductor resistance	≤ 26 Ω/km (at 20 °C)
Insulation resistance	≥ 1 GΩ*km (at 20 °C)
Nominal voltage, cable	≤ 300 V AC
Test voltage	≥ 3000 V AC (Spark test)
Minimum bending radius, fixed installation	5 x D
Minimum bending radius, flexible installation	10 x D
Smallest bending radius, fixed installation	24 mm
Smallest bending radius, movable installation	48 mm
Dynamic load capacity (bending)	Max. bending cycles: 4000000, Bending radius: 48 mm, Traversing path: 10 m, Traversing rate: 3 m/s, Acceleration: 10 m/s²
Halogen-free	in accordance with DIN VDE 0472 part 815
	in accordance with DIN EN 50267-2-1
Flame resistance	according to UL 758/1581 (horizontal)
	in accordance with UL 758/1581 FT2
	according to DIN EN 60332-2-2
Resistance to oil	According to DIN EN 60811-2-1, 168 h at 100°C

chanhvinh.com

SAC-2P- 3,0-PUR/SUSFS - Sensor/actuator cable

1410749

https://www.phoenixcontact.com/gb/products/1410749

	according to UL 758, 168 h at 60 °C
Other resistance	hydrolysis and microbe resistant
	partly UV-resistant (in accordance with DIN EN ISO 4892-2-A)
	Low adhesion
	abrasion-resistant
Special properties	flexible
	Flexible cable conduit capable
Ambient temperature (operation)	-40 °C ... 80 °C (cable, fixed installation)
	-25 °C ... 80 °C (Cable, flexible installation)

Environmental and real-life conditions

Ambient conditions

Degree of protection	IP67
	IP69K
Ambient temperature (operation)	-20 °C ... 85 °C (Superseal)

chanhvinh.com

SAC-2P- 3,0-PUR/SUSFS - Sensor/actuator cable

1410749

https://www.phoenixcontact.com/gb/products/1410749

Drawings

Schematic diagram

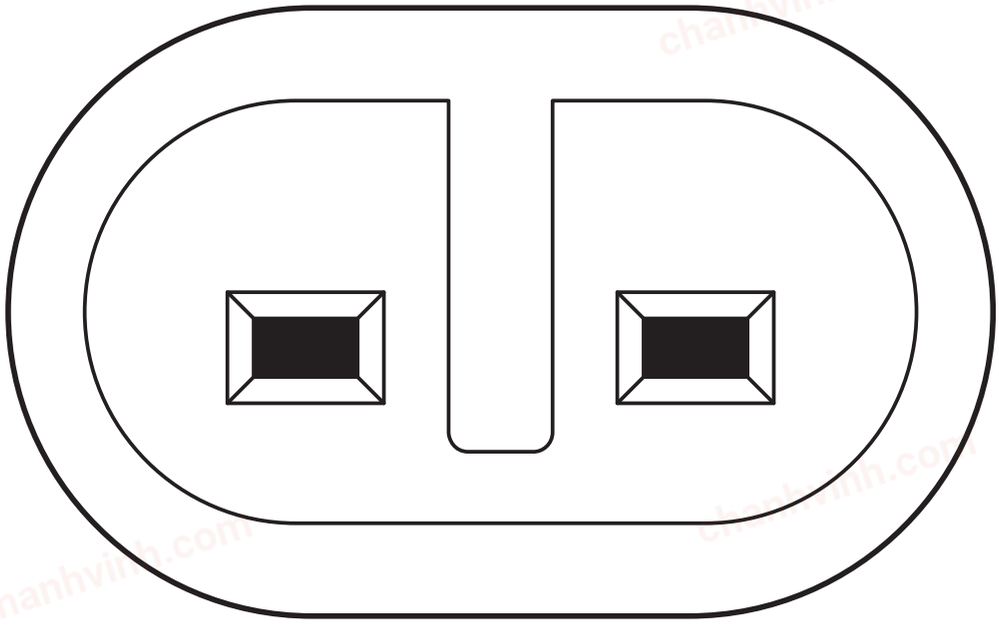

Super seal socket pin assignment, 2-pos.

chanhvinh.com

SAC-2P- 3,0-PUR/SUSFS - Sensor/actuator cable

1410749

https://www.phoenixcontact.com/gb/products/1410749

Dimensional drawing

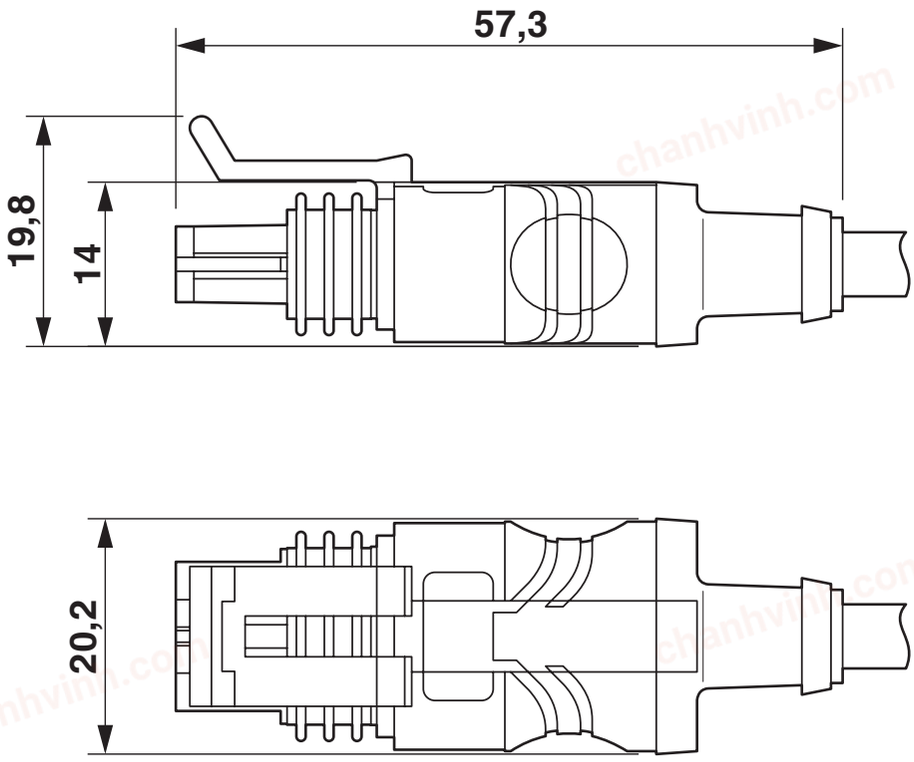

Superseal, socket, view from above and side

Circuit diagram

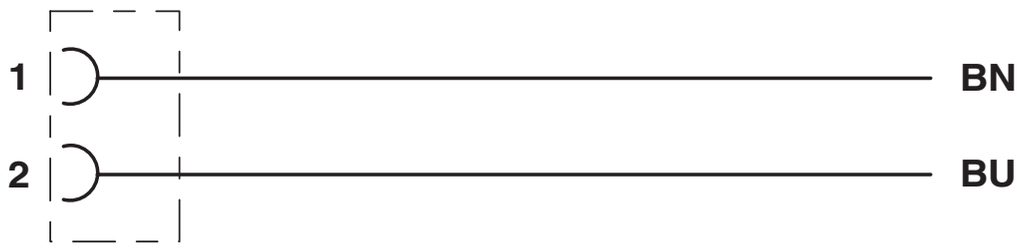

chanhvinh.com

SAC-2P- 3,0-PUR/SUSFS - Sensor/actuator cable

1410749

https://www.phoenixcontact.com/gb/products/1410749

Approvals

To download certificates, visit the product detail page: https://www.phoenixcontact.com/gb/products/1410749

EAC-RoHS
Approval ID: RU D-DE.HB35.B.00387

chanhvinh.com

SAC-2P- 3,0-PUR/SUSFS - Sensor/actuator cable

1410749

https://www.phoenixcontact.com/gb/products/1410749

Classifications

ECLASS

ECLASS-11.0	27060311
ECLASS-12.0	27060311
ECLASS-13.0	27060311

ETIM

ETIM 9.0	EC001855

UNSPSC

UNSPSC 21.0	26121600

chanhvinh.com

SAC-2P- 3,0-PUR/SUSFS - Sensor/actuator cable

1410749

https://www.phoenixcontact.com/gb/products/1410749

Environmental product compliance

EU RoHS

Fulfills EU RoHS substance requirements	Yes, No exemptions

China RoHS

Environment friendly use period (EFUP)	EFUP-E
	No hazardous substances above the limits

EU REACH SVHC

REACH candidate substance (CAS No.)	No substance above 0.1 wt%

Phoenix Contact 2024 © - all rights reserved
https://www.phoenixcontact.com

PHOENIX CONTACT Ltd
Halesfield 13, Telford
Shropshire, TF7 4PG
01952 681700
info@phoenixcontact.co.uk