chanhvinh.com

SPECIFICATIONS

Product Name:Signal Tower with Ethernet

Model:LR5-02□ENW、LR5-□02□E□W-□

chanhvinh.com

PATLITE Corporation

chanhvinh.com

1. General Specifications

Rated Voltage		24V DC	
Operating Voltage Range		Rated Voltage ± 10%	
Rated Current Consumption	Main Unit	Typ.15 mA Max. 20 mA	
	LED Unit	Typ.40 mA Max. 45 mA (per tier)	
	Buzzer Unit	Typ.40 mA Max. 45 mA	
Operating Ambient Temperature		-20℃ ～ +50℃	
Operating Ambient Humidity		90% RH or less, no freezing, no condensation	
Storage Ambient Temperature		-30℃ ～ +60℃	
Storage Ambient Humidity		90% RH or less, no freezing, no condensation	
Mounting Location		Indoors	
Mounting Direction		Upright	
Protection Rating	WE Type	IP 65 (IEC 60529)	
	LE Type	IP 54 (IEC 60529)	
Environmental Condition		Upright	
Insulation Resistance		More than 5M Ω at 500 VDC between the live part and non-current carrying metallic part	
Withstand Voltage		500 VAC applied for 1 min between live part and non-current carrying metallic part without breaking insulation	
Mass (Tolerance:±10%)		(LED Unit) + [Buzzer Unit]	
	WE Type	0.1kg + (0.04kg)×Tiers + [0.05kg]	
	LE Type	0.39kg + (0.04kg)×Tiers + [0.05kg]	
Outer Dimensions		Refer to the Outer Dimension Drawing	
Buzzer Sound /Typical Frequency	No.1	Rapid intermittent beep / 3,378Hz	
	No.2	Continuous beep sound / 3,378Hz	
	No.3	Rapid Hi-Lo / 2,016Hz&3,012Hz	
	No.4	Sweep sound / 1,000Hz-4,032Hz	
Setting		Depending on DIP Switch Settings Refer to the 7.Buzzer Pattern Set-up	
Sound Pressure Level		Typ.85dB	
		Sound Reduction Approx. -10dB Depending on DIP Switch Settings Refer to the 7.Buzzer Pattern Set-up	
Environmental Condition		Buzzer sound No.4 was measured from the total circumfrence of the Buzzer Unit at 1m	
Interfaces: Power Supply		Screwless Terminal Block (24V DC)	
	Supported Wire Diameter	Single wire : φ0.5～1.2mm Stranded wire : 0.2-1.5mm^2 (AWG24-16)	
Interfaces: Ethernet		RJ-45 Connector	
Network Communication Format		Ethernet (IEEE802.3 Conformity) 10BASE-T/100BASE-TX (Auto-MDI/MDIX)	
Operation Interface		Switch for Initialize ×1pc	
Accessories	WE Type	Hexagon nut with flange(M3) ×3pcs	
	LE Type	L-bracket ×1pc	
Supported Unit	LED Unit	LR5-E-□、LR5-E-□Z *Maximum number of 5 tiers for LED Units	
	Buzzer Unit	LR5-BW	
	WD transmitter	WDT-5LR-Z2	
Supported Option	Wall-Mount Bracket	SZK-002W, SZK-001U	
	Circular Bracket	SZ-010	
	L-bracket	SZL-001	
	Circular Bracket	SZW-001W	
	Mounting Bracket	SZW-002W	
	AC Adapter	ADP-001C	

chanhvinh.com

Conformity Standards	UL 508 ,CAN/CSA C22.2 No.14-18 FCC Part15 SubpartB(Class A), ICES-003 Issue 7(Class A) EN 61000-6-4, EN 61000-6-2, EN IEC 63000 KS C 9610-6-4, KS C 9610-6-2
Remarks	・Due to the characteristics of the LED elements, a variation in difference of the color tone and brightness of every product may occur ・Conforms to the CE/UKCA requirements ・UL Recognized Component(File No.E215660) ・Modbus is a registered trademark of Modicon Inc. (Schneider Automation International). ・Microsoft Edge is registered trademark of Microsoft Corporation in the United States and other countries. ・Google Chrome is a trademark or registered trademark of Google LLC.

2.Model Number Configuration

Unit Model(Body Unit)

L R 5 — 0 2 W E N W

Size

5	Φ50

Rated Voltage

02	24V DC

Mounting/Wiring

WE	Direct mounting, Ethernet communication
LE	Mounting with pole/L-bracket, Ethernet communication

Body Color

W	Off-white

Assembly Model

L R 5 — 3 0 2 W E B W — R Y G

Size

5	Φ50

Rated Voltage

02	24V DC

Tiers

1	1Tier
2	2Tiers
3	3Tiers
4	4Tiers
5	5Tiers

Buzzer Unit

B	With buzzer
N	No buzzer

Body Color

W	Off-white

LED Unit Color

R	Red
Y	Amber
G	Green
B	Blue
C	White

From top to bottom

Mounting/Wiring

WE	Direct mounting, Ethernet communication
LE	Mounting with pole/L-bracket, Ethernet communication

chanhvinh.com

3.Action Specifications

LED unit operation control	7 patterns + off can be controlled for each LED unit color		
	Flashing Pattern	1	Continuous ON
		2	Flashing(Slow)【0.5sec ON / 0.5sec OFF】
		3	Flashing(Medium)【0.25sec ON / 0.25sec OFF】
		4	Flashing(Fast)【0.125sec ON / 0.125sec OFF】
		5	Single Flash
		6	Double Flash
		7	Triple Flash
Buzzer unit operation control	ON/OFF control		

※ The intermittent buzzer and the LED pattern do not synchronize.

4.Function Specifications

4.1 LED unit, Buzzer unit control function

Modbus/TCP	Controllable with Modbus/TCP Command
HTTP/HTTPS	Controllable with HTTP/HTTPS Command
Socket Communication	Controllable with PNS Command

4.2 Status Acquisition Function

Modbus/TCP	Current status of Signal Tower, Buzzer can be acquired by Modbus/TCP Command.
HTTP/HTTPS	Current status of Signal Tower, Buzzer and Firmware Version can be acquired by HTTP/HTTPS Command.
Socket Communication	Current status of Signal Tower, Buzzer can be acquired by PNS Command.

4.3 External Monitoring Function

Ping Monitoring		Network abnormality detection by sending Ping network devices
	Number of Monitoring	1
	Monitoring Cycle	1～600 seconds
	Sending Count	The number of times to detect can be set from 1 to 30.
	Number of Sending	The number of sending Ping by one monitoring can be set from 1 to 3.
Modbus/TCP Monitoring		Monitor the connection status with the Modbus/TCP master
	Number of Monitoring	1

4.4 Setting Function

Automatic Network Setting	Network setting in this product can communicate with a DHCP server to be set automatically.
Configuration Setting	Various configurations of the Main Unit can be read and written as setting files
Main Unit Setting	Various settings of the main body can be done with a web browser. Supported browsers : Microsoft Edge, Google Chrome
Firmware Update	Firmware of the main unit can be updated using WEB browser.
Languages supported on the setting screen	Japanese, English, Traditional Chinese, Sinplified Chinese, Korean, Thai German, French, Italian, Spanish

chanhvinh.com

5.Wiring

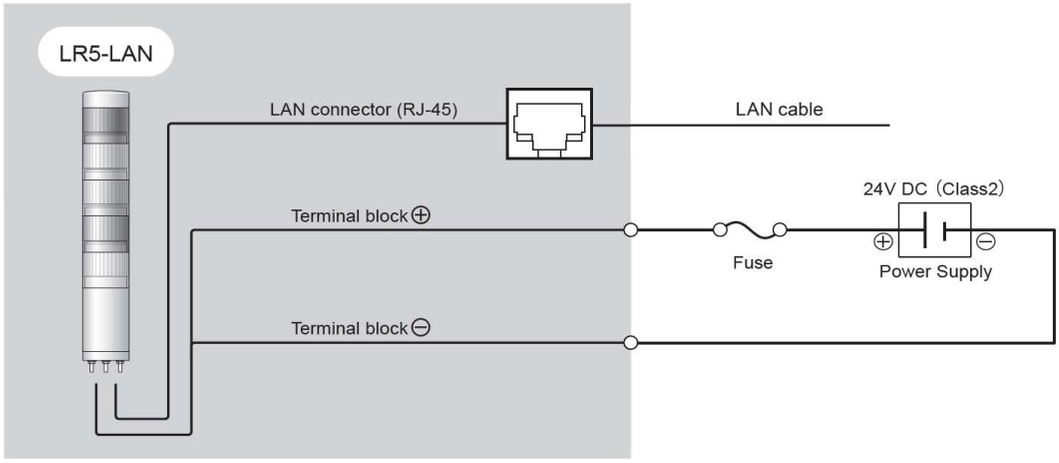

・Fuse

Fuse Rating	250V / 1A

※Reccomended Fuse : 250V/1A (5 × 20mm Fast-Acting Glass Body Cartridge Fuse)

・LAN cable

Since the RJ-45 connector at the end of the LAN cable is connected to the body, it should meet the dimensional requirements shown below.

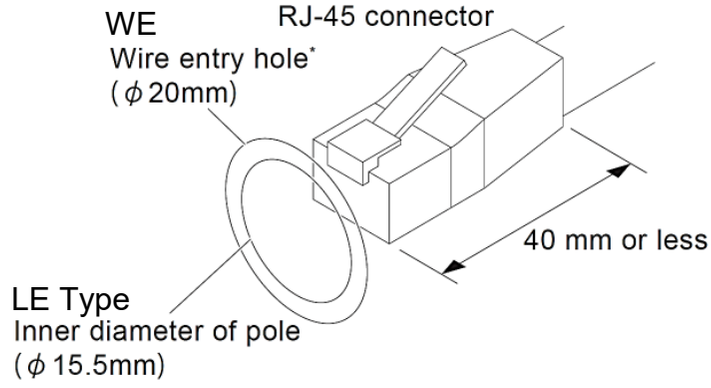

*When using the wall-mount bracket SZK-002W and SZK-001U, you have to use LAN cable with a diameter of 15 mm or less.

chanhvinh.com

6.Outer Dimensions

6.1 [WE] Direct mounting

Unit : mm

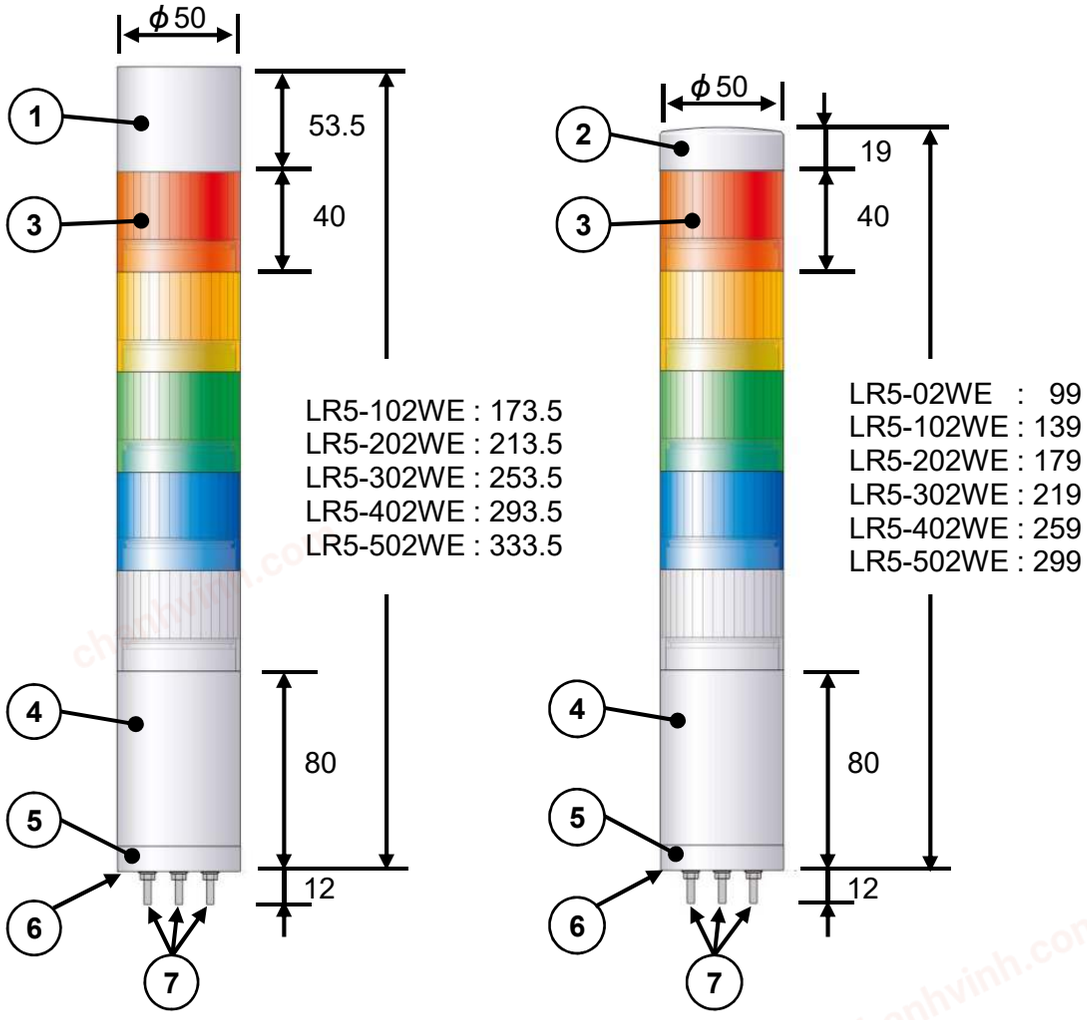

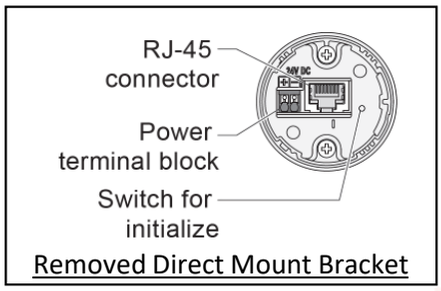

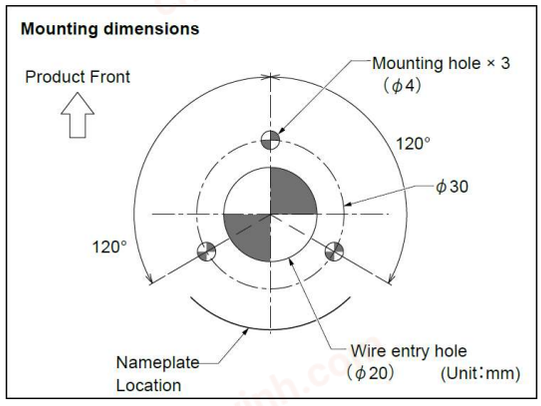

No.	Name	Material
1	Buzzer Unit	PC(Off-white)
2	Head Cover	PC(Off-white)
3	Globe	PC(Color based on LED unit)
4	Body	PC(Off-white)
5	Direct Mount Bracket	PC(Off-white)
6	Waterproof Packing	Silicone Rubber
7	Mounting Bolt(M3)	Steel

※Maximum Board Thickness : 7

chanhvinh.com

Drawing No.	Rev.	Page
LR5-02WE-W18	B	7/8

6.2 [LE] Mounting with pole/L-bracket,

Unit : mm

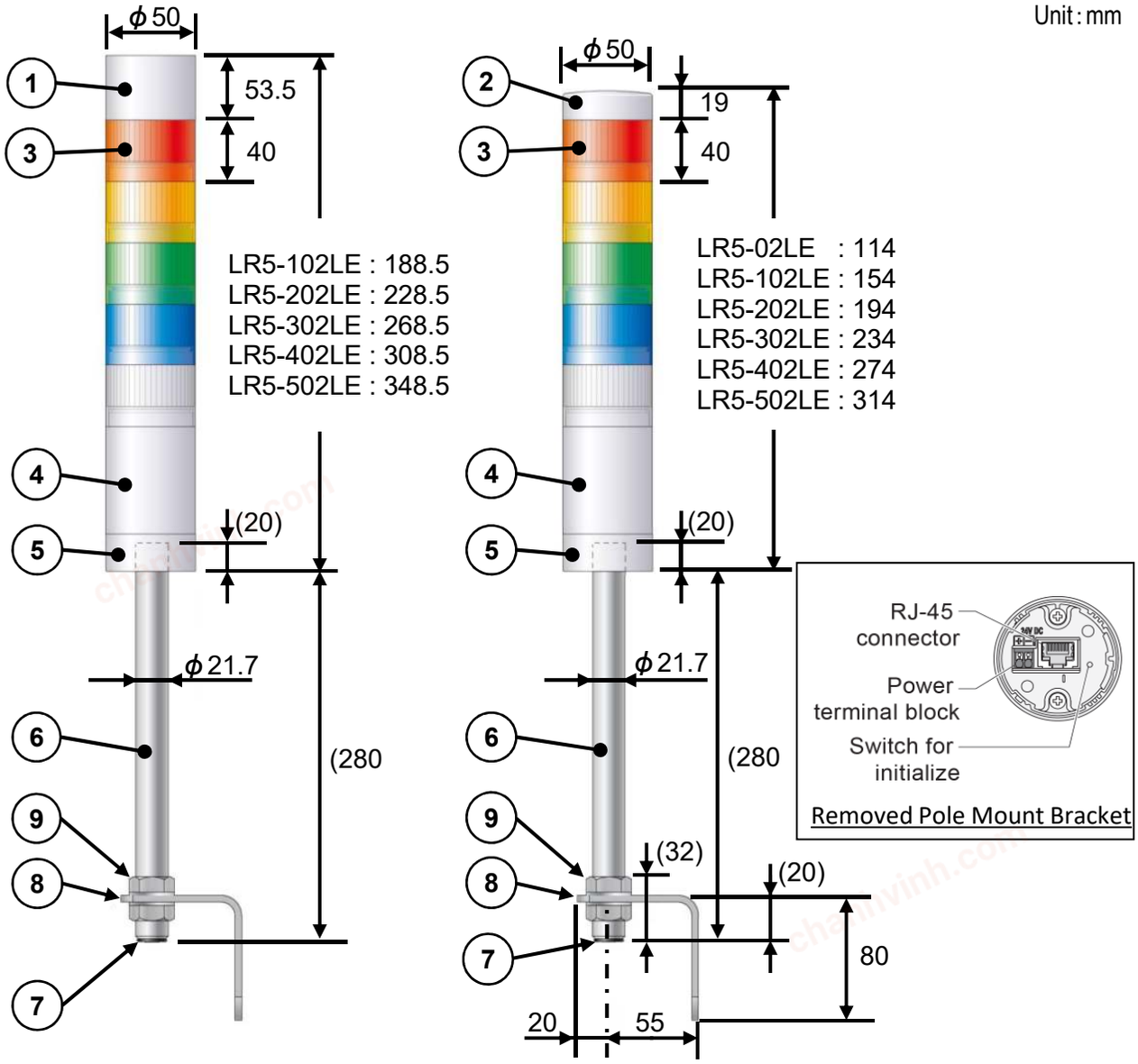

No.	Name	Material
1	Buzzer Unit	PC(Off-white)
2	Head Cover	PC(Off-white)
3	Globe	PC(Color based on LED unit)
4	Body	PC(Off-white)
5	Pole Bracket	PC
6	Pole	AL
7	Rubber Bushing	EPR
8	L-bracket	Steel (t=3)
9	Hexagon Nut M22	SUM

Mounting dimensions

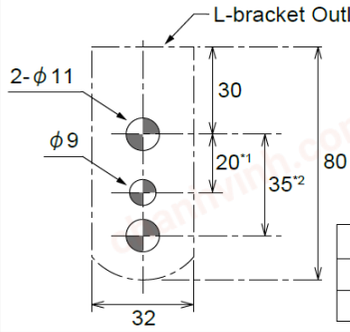

Screw / Nut
*1 : M8 × 2
*2 : M10 × 2

chanhvinh.com

7.Buzzer Pattern Set-up

If your product is a model with a buzzer unit (B), you can set a buzzer sound and volume.
To set them, you have to remove the buzzer unit and configure the DIP switches on its bottom.

Buzzer Unit Underside

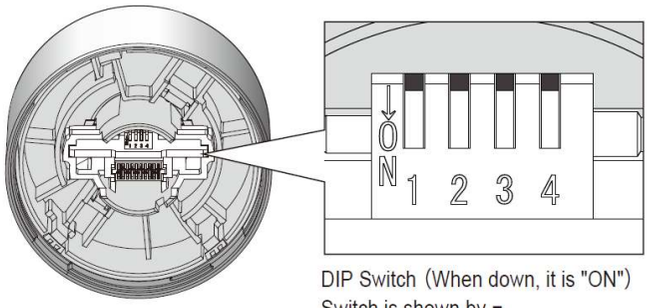

DIP Switch (When down, it is "ON")
Switch is shown by ■.

■ Setup Table

Buzzer Sound	DIP Switch 1	DIP Switch 2	Sound Pattern
No.1	OFF	OFF	Rapid Intermittent Beep
No.2	ON	OFF	Continuous Beep Sound
No.3	OFF	ON	Rapid Hi-Lo
No.4	ON	ON	Sweep Sound

DIP Switch 3	Volume
OFF	Normal
ON	Sound Reduction

〈Note〉 Do not use DIP Switch 4.
It is set to "OFF" at all times after factory shipments.