chanhvinh.com

StructuredGround™ Universal Ground Bar System

PANDUIT®

SPECIFICATION SHEET

specifications

Provide a field wiring terminal for the connection of an equipment grounding conductor in each control panel and enclosure. The terminal shall be UL 467 Listed or CSA 22.2 certified. The equipment grounding conductor shall have electrical continuity with the enclosure or sub-panel. The field wiring terminal may also provide multiple locations or ports for terminating equipment ground conductors from devices inside the panel or enclosure, functioning as the ground bar within the panel or enclosure. The ground bar shall provide a means to attach and to identify the main equipment grounding conductor.

PATENTED



technical information

Performance level:	UL 467 Listed and CSA 22.2 Certified for grounding and bonding an equipment grounding conductor up to 2/0 AWG; meets UL 508A requirements
Main:	Provides a location for the main equipment grounding conductor using a compression or mechanical connector
Wire ports:	Accept bare stripped copper wire from #14 to #4 AWG Accept wire ferrules from #14 AWG to #6 AWG Top of ground bar accepts ring terminals, compression connectors or mechanical connectors with a ¼" stud hole size and maximum width of 0.55"
Materials:	Ground bars and bonding stand-offs precision machined from 110 electrolytic copper with a 99.9% copper content and then tin-plated for additional corrosion resistance
Packaging:	Each part is provided with all fasteners required for terminating wires and for each mounting option

key features and benefits

Flexible design	Works with all types of wire termination methods including stripped wire, ferrules, terminals, and compression or mechanical connectors; compatible with over 140 Panduit connectors
Multiple mounting options	In addition to surface mounting, two mounting stand-off options are available, one that bonds to the mounting surface and one that isolates from the mounting surface; both options provide additional finger wiring space in tight places
Unique geometry	The unique shape of the universal ground bar allows more surface contact between the wire connectors and the ground bar

applications

The patented StructuredGround™ Universal Ground Bar System (UGB) offers multiple termination methods and mounting options making it ideal for any control panel or enclosure application. The UGB enables the end user to choose the method in which to terminate conductors with connectors of their choice or simply cut and strip the wires. The UGB system will help reduce the types of ground bars that a panel shop or distributor needs to keep in stock to meet the various applications and customer requirements.

Universal Ground Bar System

6-port ground bar:	UGB2/0-414-6
12-port ground bar:	UGB2/0-414-12
18-port ground bar:	UGB2/0-414-18
Isolation standoffs:	UGB-IN-SO
Bonding standoffs:	UGB-B-SO

Recommended Connectors for Main Equipment Ground Conductor, Maximum 2/0 AWG

Copper Mechanical with Anti-Rotation

#14 – 2/0 AWG:	CLMAR2/0-14-Q

Two-Hole Copper Compression, 1/4" Stud Hole with 5/8" Spacing; #14 to 2/0 AWG

#14 – 10 AWG:	LCA10-14A-L
#8 AWG:	LCD8-14A-L
#6 AWG:	LCD6-14A-L
#4 AWG:	LCD4-14A-L
#2 AWG:	LCD2-14A-Q
#1 AWG:	LCD1-14A-E
1/0 AWG:	LCD1/0-14A-X
2/0 AWG:	LCD2/0-14A-X

One-Hole Copper Compression, 1/4" Stud Hole; #14 to 2/0 AWG

#14 – 10 AWG:	LCA10-14-L
#8 AWG:	LCAS8-14-L
#6 AWG:	LCAS6-14-L
#4 AWG:	LCAS4-14-L
#2 AWG:	LCAS2-14-Q
#1 AWG:	LCAS1-14-E
1/0 AWG:	LCAS1/0-14-X
2/0 AWG:	LCAS2/0-14-X

One and two-hole copper compression connectors available for both code and flex conductors, with narrow tongue and bent tongue configurations.

Recommended Connectors for Port Connections

Ring Terminals, ¼" Stud Hole, Maximum Width of 0.55"; #22 to #4 AWG

Ring terminals available with vinyl, nylon, KYNAR*, high-temp, or heavy duty insulation or non-insulated.

Compression Connectors, Maximum Width of 0.55"; up to #4 AWG Typical

Ferrules, Minimum Pin Depth of 12mm; #14 to #6 AWG

*KYNAR is a registered trademark of Atofina Chemicals, Inc.

chanhvinh.com

StructuredGround™ Universal Ground Bar System

CLMAR2/0-14-Q: Tin-plated copper connector with anti-rotational feature.

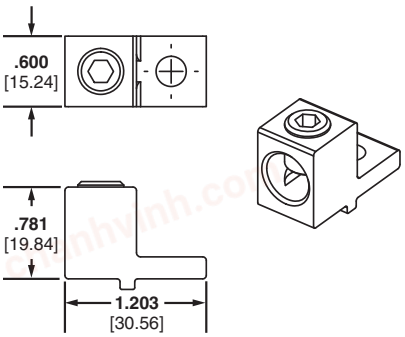

UGB2/0-414-18: 18-port UGB mounted directly to surface with the equipment grounding conductor terminated in an anti-rotational, copper mechanical connector.

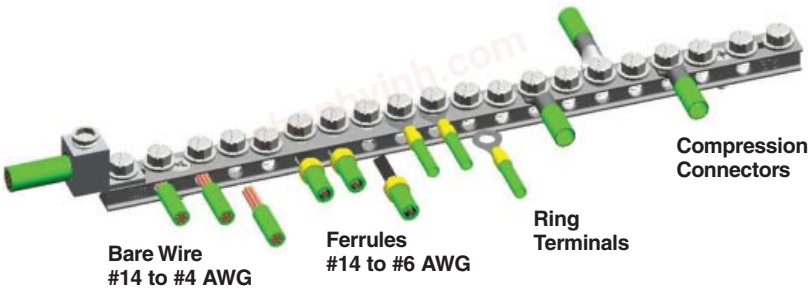

UGB-B-SO: Bonding stand-off.

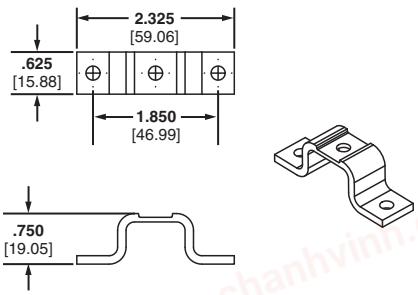

UGB2/0-414-12: 12-port UGB mounted on bonding stand-offs with the equipment grounding conductor terminated in a two-hole compression lug.



UGB-IN-SO: Isolation stand-off.

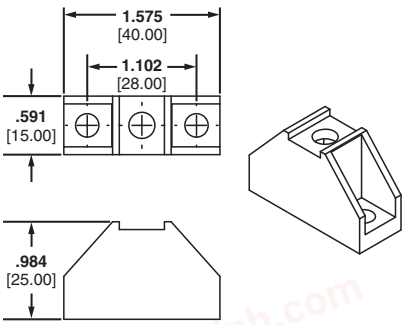

UGB2/0-414-6: 6-port UGB mounted on isolation stand-offs with the equipment grounding conductor terminated in an anti-rotational, copper mechanical connector.



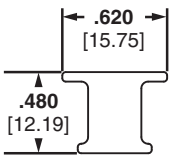

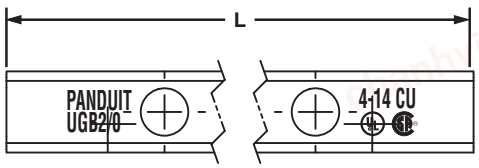

Part Number	"L" Dim.
UGB2/0-414-6	4.92" (125mm)
UGB2/0-414-12	8.28" (210mm)
UGB2/0-414-18	11.64" (295mm)

WORLDWIDE SUBSIDIARIES AND SALES OFFICES

PANDUIT CANADA
Markham, Ontario
cs-cdn@panduit.com
Phone: 800.777.3300

PANDUIT EUROPE LTD.
London, UK
cs-emea@panduit.com
Phone: 44.20.8601.7200

PANDUIT SINGAPORE PTE. LTD.
Republic of Singapore
cs-ap@panduit.com
Phone: 65.6305.7575

PANDUIT JAPAN
Tokyo, Japan
cs-japan@panduit.com
Phone: 81.3.6863.6000

PANDUIT LATIN AMERICA
Guadalajara, Mexico
cs-la@panduit.com
Phone: 52.33.3777.6000

PANDUIT AUSTRALIA PTY. LTD.
Victoria, Australia
cs-aus@panduit.com
Phone: 61.3.9794.9020

For a copy of Panduit product warranties, log on to www.panduit.com/warranty

For more information

Visit us at www.panduit.com

Contact Customer Service by email: cs@panduit.com or by phone: 800.777.3300

©2013 Panduit Corp.
ALL RIGHTS RESERVED.

GRSP01--SA-ENG
Replaces SA-GRSP08
9/2013