chanhvinh.com

THIS COPY IS PROVIDED ON A RESTRICTED BASIS AND IS NOT TO BE USED IN ANY WAY DETRIMENTAL TO THE INTERESTS OF PANDUIT CORP.

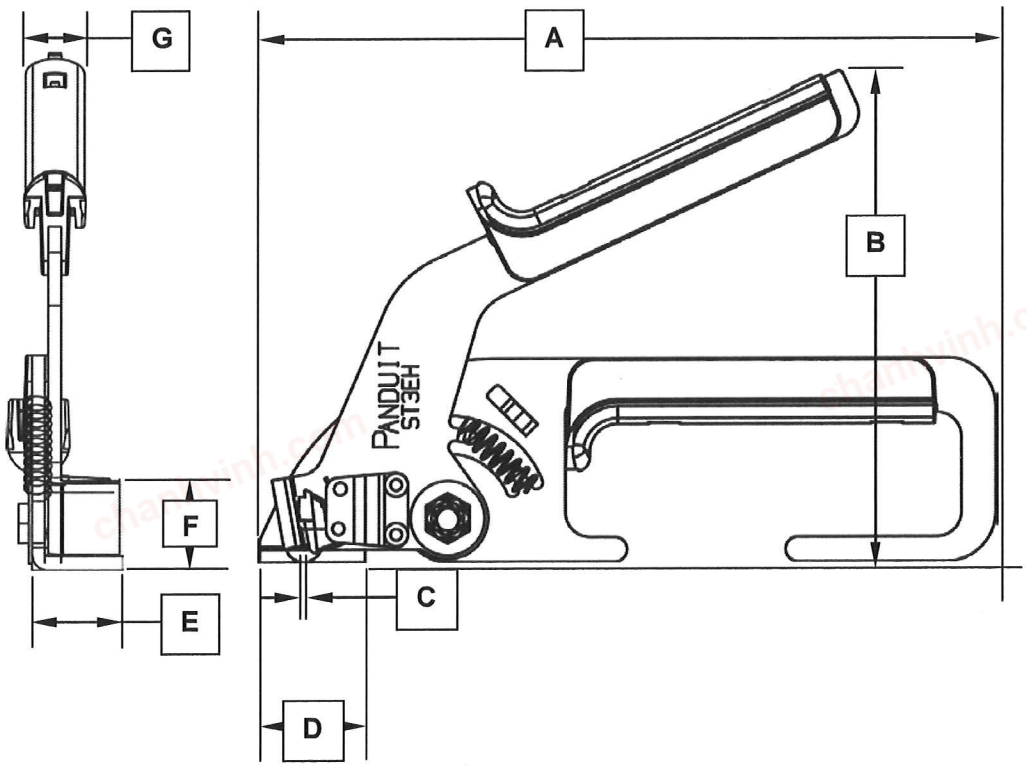

SPECIFICATIONS:

PANDUIT TOOL NO: ST3EH
TOOL WEIGHT: 9 oz. (256 gr.)

INSTALLS ALL LH, H, & EH CROSS SECTION CABLE TIES.

CABLE TIE CROSS-SECTION CODE:
LH = Light Heavy H = Heavy EH = Extra Heavy

THIS TOOL'S FEATURES INCLUDE:

- Single handle trigger for fast installation
- Cable tie side entry for immediate positioning of tie and tool
- One hand operation – lightweight
- Installer controlled tension
- Cut-off capability with the twist of the wrist
- Easy removal of excess tie

DIMENSIONS SHOWN IN PARENTHESES ARE (mm) METRIC:

A = 7.50	(190.50)	OVERALL LENGTH
B = 5.0	(127.00)	OPEN HANDLE SPAN
C = .098 W x .604 L	(2.49 W x 15.24 L)	TIE ENTRY
D = 1.063	(27.00)	HEIGHT OF HEAD
E = .875	(22.23)	DEPTH OF HEAD
F = .875	(22.23)	WIDTH OF HEAD
G = .50	(12.70)	DEPTH OF HANDLE

F:\RVUSERS/ENGDOCS/CUSTDWGS/TB25129A01_01.doc

REV	DATE	BY	CHK	APR	DESCRIPTION	ECN
01	2-07-13	BLR			UPD TEMPLATE & BRANDING	4608

ST3EH
CABLE TIE INSTALLATION TOOL

CUSTOMER DRAWING

ITEM REVISION NAME: TB25129A01_01

PANDUIT

UNLESS OTHERWISE SPECIFIED, DIMENSIONAL TOLERANCES ARE:
(.x) ± --- (.xxx) ± ---
(.xx) ± --- ANGLES ± ---
THIRD ANGLE PROJECTION

MATERIAL: ----------

DRAWING NUMBER: TB25129A01

DRAWN BY:	DATE:	CHK	SCALE	SHT	SIZE
BLR	4-19-06	BJPU	NONE	1 OF 1	A