chanhvinh.com

THIS COPY IS PROVIDED ON A RESTRICTED BASIS AND IS NOT TO BE USED IN ANY WAY DETRIMENTAL TO THE INTERESTS OF PANDUIT CORP.

PART NO	CLEARANCE HOLE FOR SCREW	HOLE DIA
MTM1H-C	#8 (4mm)	.176 (4.47mm)
MTM1H10-C	#10 (5mm)	.214 (5.43mm)
MTM1H25-C	#14 (6mm)	.281 (7.14mm)

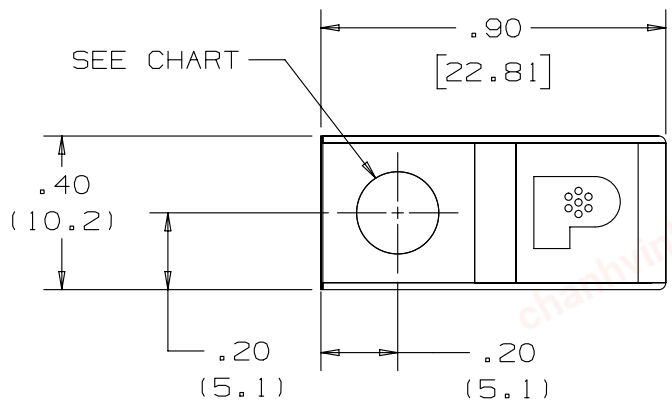

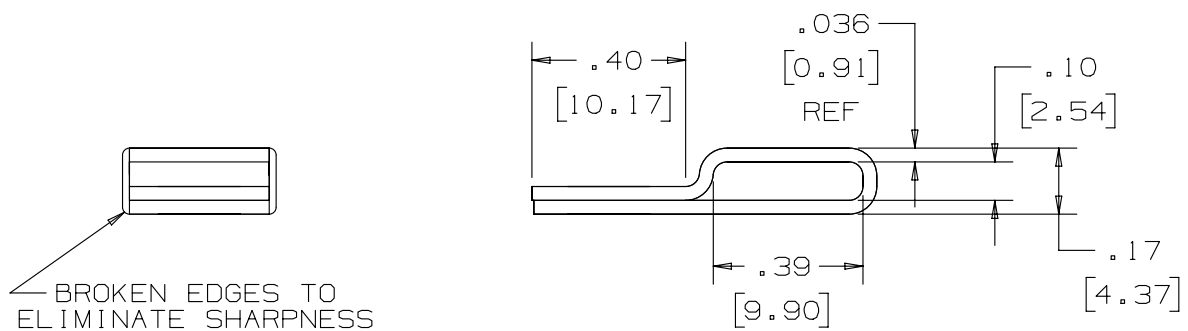

NOTES:

1. DIMENSIONAL TOLERANCES:
   .XX ±.02(.50)
   .XXX ±.010(.254)
2. USE WITH STD,LIGHT HEAVY, HEAVY MLT'S & 3/8" STRAPPING.
3. DIM'S IN ( ) ARE mm.
4. PACKAGE C = 100

REV	DATE	BY	CHK	APR	DESCRIPTION	ECN
07A	02/13	JAMB	MIM	RGRO	UPDATE DRAWING TO NEW PANDUIT GLOBAL TITLE BLOCK WITH PANDUIT LOGO	SSECN01031
06A	09/04	JAMB	EJD	----	Ⓒ ADDED "LIGHT-HEAVY" MLT'S TO NOTE 2. Ⓓ CHANGED "AISI NO. 5 EDGE" TO "BROCKEN EDGES"	12052
05	06/04	JAMB	DPN	----	Ⓑ CHANGED PART NO. MTM1H8-C TO MTM1H-C	11723
04	05/04	JAMB	DPN	----	Ⓐ PART NO.CHANGED FROM MTM1H14C TO MTM1H25C	11714
03	05/02	JAMB	DPN	----	MATERIAL WAS 302 S.S.	10042
02	01/01	KMD	JAC	----	ADDED NOTE 4. CAD FILE SPEC WAS NPC-S41042_01	09010
01	5/92	DL	LM	----	ADDED MTM1H10 & MTM1H14	01012

TITLE

METAL TIE MOUNT (1) HOLE

CUSTOMER DRAWING

ITEM REVISION NAME: N41042BS/07

DATASET FILE NAME: N41042BS_DC/07A

UNLESS OTHERWISE SPECIFIED, DIMENSIONAL TOLERANCES ARE: IN [mm]

.X ± .1 [2.54] .XXX ± .005 [.127]
.XX ± .01 [.25] ANGLES ± 5 °

THIRD ANGLE PROJECTION

PANDUIT

MATERIAL: 304 STAINLESS STEEL

DRAWING NUMBER: N41042BS_DC

DRAWN BY	DATE	CHK	SCALE	SHT 1 OF 1	SIZE
SAM	3/25/91	JAC	2:1		A