chanhvinh.com

THIS COPY IS PROVIDED ON A RESTRICTED BASIS AND IS NOT TO BE USED IN ANY WAY DETRIMENTAL TO THE INTERESTS OF PANDUIT CORP.

PANDUIT TOOL NO.	INSTALLS * THE FOLLOWING CABLE TIE CROSS-SECTION **	WEIGHT/PC	
		OZ	GRAMS
GS4H-E	S,HS,LH,H	15.34	435

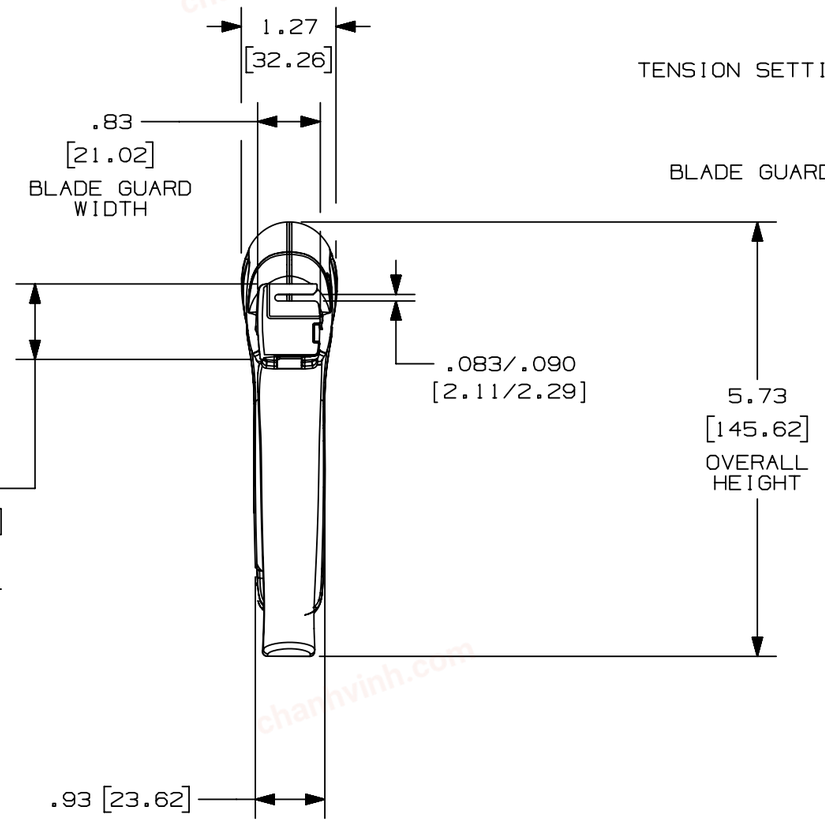

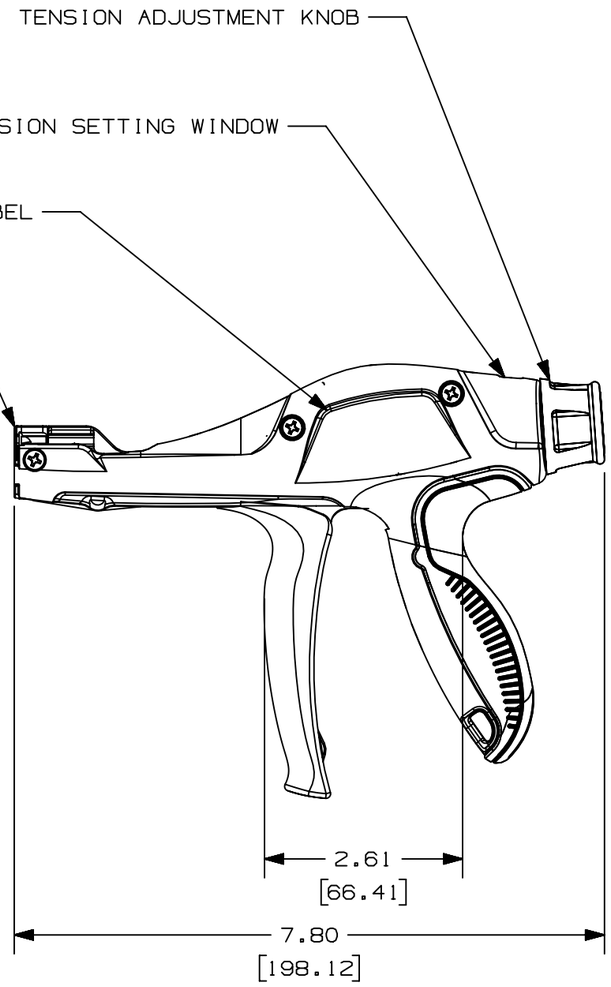

NOTES, UNLESS OTHERWISE SPECIFIED:

RoHS COMPLIANT.

* THIS TOOL TIGHTENS CABLE TIES AND CUTS OFF EXCESS PORTION WHEN PRESET TENSION IS ATTAINED.

** CABLE TIE CROSS-SECTION CODE:
S = STANDARD
HS = HEAVY STANDARD (CONTOUR-TY)
LH = LIGHT HEAVY
H = HEAVY

DIMENSIONS IN BRACKETS ARE METRIC.

TENSION SETTINGS

TIE WIDTH	[redacted]	[redacted]
SETTING	STD 0-4	HVY 5-8

MS90387-2

REV	DATE	BY	CHK	APR	DESCRIPTION	ECN
01	8-24-18	JEH	ABJ	JADE	UPDATED TENSION LABEL WITH MIL SPEC MS90387-2	037489
00	1-27-15	JEH	ABJ	ABJ	RELEASED	4851

TITLE: CD, GS4H-E

Customer/Military Drawing

ITEM REVISION NAME: R27578AA/01

DATASET FILE NAME: R27578AA_DS_WH27578B01/01A

UNLESS OTHERWISE SPECIFIED, DIMENSIONAL TOLERANCES ARE: IN [mm]
.X ± .1 [2.54] .XXX ± .005 [.127]
.XX ± .01 [.25] ANGLES ± 5 °
THIRD ANGLE PROJECTION

MATERIAL: -

DRAWING NUMBER: WH27578B01

DRAWN BY	DATE	CHK	SCALE	SIZE
JEH	1-26-15	ABJ	1:2	B

SHT 1 OF 1