chanhvinh.com

45° Angled Wire Caps for TX6A™/TX6™ PLUS Mini-Com® UTP/STP Jack Modules

PANDUIT®
SPECIFICATION SHEET

SPECIFICATIONS

45° angled wire caps, when mated with compatible UTP or shielded jack modules, shall provide improved cable routing to jacks in confined spaces. Angled wire caps shall terminate 4-pair, 22 - 26 AWG, 100 ohm twisted pair cable and shall use a forward motion termination method to optimize performance by maintaining cable pair geometry while eliminating conductor untwist. The wire caps shall be color-coded to designate performance category and shall include a universal label coded for T568B wiring schemes.

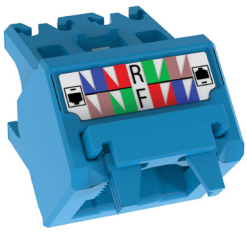

TECHNICAL INFORMATION

Channel and component performance^:	Exceeds channel and component requirements of ANSI/TIA-568.2-D and ISO 11801 standards for the respective Category or Class performance levels at the designated swept frequencies for that Category or Class
IEC compliance:	Meets IEC 60603-7 and IEC 60512-99-002
PoE and PoH compliance:	Meets IEEE 802.3af / 802.3at and 802.3bt type 3 and type 4. Supports Power over HDBaseT up to 100 watts.
c(UL)us compliance	UL 1863 (Use as communications circuit accessory); CSA standard C22.2 UL 2043 (Suitable for use in air-handling spaces)
RoHS compliance:	Compliant
Cable and conductor termination range:	Compatible with 22 – 26 AWG solid or stranded cable with conductor insulation diameters of 0.060 in. max. and overall cable O.D. 0.2 in. - 0.33 in. (5.08mm - 7.62mm)
Depth reduction Provided:	Allows up to 55% reduction in cable routing depth compared to straight exit wire cap with both allowing proper cable bend radius for 0.275 in. (6.99mm) diameter cable (0.5 in. (12.7mm) with angled caps vs. 1.1 in. (27.94mm) with straight exit caps)
Operating temperature:	14°F to 167°F (-10°C to 75°C)

^When mated to compatible UTP and shielded jack modules.

KEY FEATURES AND BENEFITS

Angled cable exit:	Large diameter cable can be routed to jacks in tight spaces while maintaining proper bend radius; also can be used on multiple jacks positioned next to each other
Reversible direction design:	Both wire cap versions can be inserted into compatible jacks in either direction, bringing the convenience of needing only two parts to handle up, down, left, or right cable routing needs
Wide compatibility:	Immediate compatibility with the most common Mini-Com UTP and shielded jacks
Uses enhanced Giga-TX Technology:	Optimizes performance by eliminating conductor untwist and reduces installation time and expense
Consistent termination design:	Similarity in both conductor management and termination method to the most common straight exit Mini-Com UTP and shielded jacks; ensures minimal learning curve and fast field terminations

APPLICATIONS

45° Angled Wire Caps can be used with compatible TX6A and TX6 PLUS Mini-Com UTP and shielded Jack Modules wherever an angled cable exit from the modular jack is desired and in confined jack mounting spaces such as in modular furniture, raceway, and wall outlets with conduit. 45° Angled Wire Caps are especially beneficial for use with Category 6A cabling which is increasingly being deployed in office and furniture applications, since their angled routing better accommodates the larger diameter and bigger bend radius of Category 6A cable. 45° Angled Wire Caps are also useful in high density rack cabling where they reduce horizontal cabling bulk by as much as 50% and more directly feed cables into pathways for easier cable management.

45° Angled Wire Caps for Mini-Com UTP Jack Modules (10 pcs/package)	
Up/Down 45° Angle Caps	
TX6A:	CJUDCAPBU-X
TX6 PLUS:	CJUDCAPIW-X
Left/Right 45° Angle Caps	
TX6A:	CJLRCAPBU-X
TX6 PLUS:	CJLRCAPIW-X
Compatible Mini-Com UTP Jack Modules	
Mini-Com UTP Jack Modules	
TX6A:	CJ6X88TG*
TX6 PLUS:	CJ688TG*
Mini-Com Spring Shuttered UTP Jack Modules	
TX6A:	CJH6X88TG*
TX6 PLUS:	CJH688TG*
45° Angled Wire Caps for Mini-Com Shielded Jack Modules (10 pcs/package)	
Up/Down 45° Angle Caps	
TX6A:	CJSUDCAPBU-X
TX6 PLUS:	CJSUDCAPIW-X
Left/Right 45° Angle Caps	
TX6A:	CJSLRCAPBU-X
TX6 PLUS:	CJSLRCAPIW-X
Compatible Mini-Com Shielded Jack Modules	
Mini-Com Shielded Jack Modules	
TX6A:	CJS6X88TGY
TX6 PLUS:	CJS688TGY
Mini-Com Spring Shuttered Shielded Jack Modules	
TX6A:	CJSH6X88TGY
TX6 PLUS:	CJSH688TGY
Tools and Accessories	
Termination Tool:	TGSJT
Wire snipping tool:	CWST
Wire snipping tool:	CJAST

*Colors: IW (Off White), EI (Electric Ivory), IG (International Gray), AW (Arctic White), BL (Black), BU (Blue), RD (Red), YL (Yellow), GR (Green), OR (Orange,) VL (Violet), or WH (White)

chanhvinh.com

45° Angled Wire Caps for TX6A™/TX6™ PLUS Mini-Com® UTP/STP Jack Modules

Up/Down 45° UTP TG Wire Cap

CJUDCAPBU-X and CJUDCAPIW-X
(See Installation Instruction PN610)

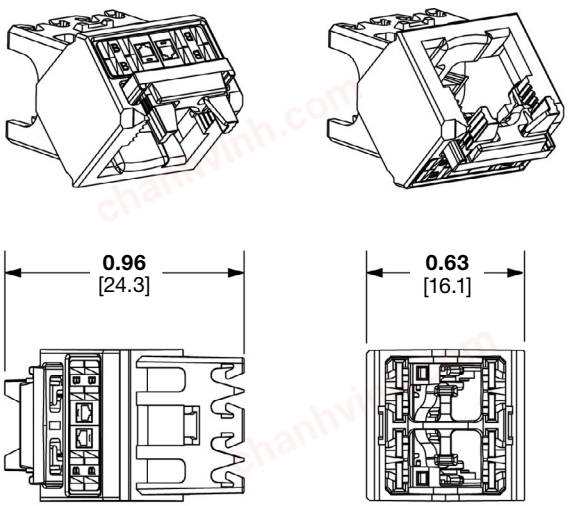

Left/Right 45° UTP TG Wire Cap

CJLRCAPBU-X and CJLRCAPIW-X
(See Installation Instruction PN609)

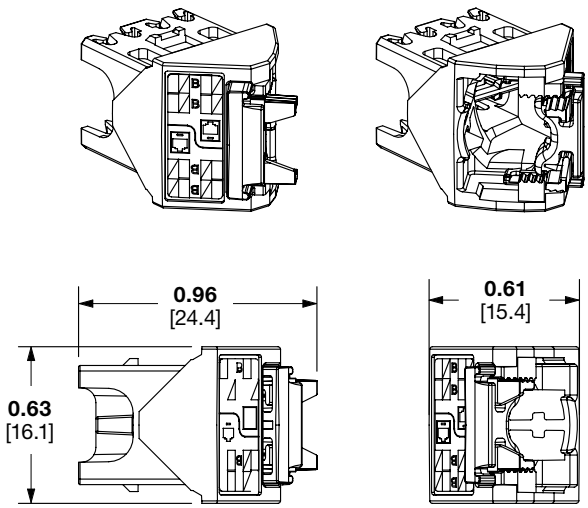

Up/Down 45° Shielded TG Wire Cap

CJSUDCAPBU-X and CJSUDCAPIW-X
(See Installation Instruction PN630)

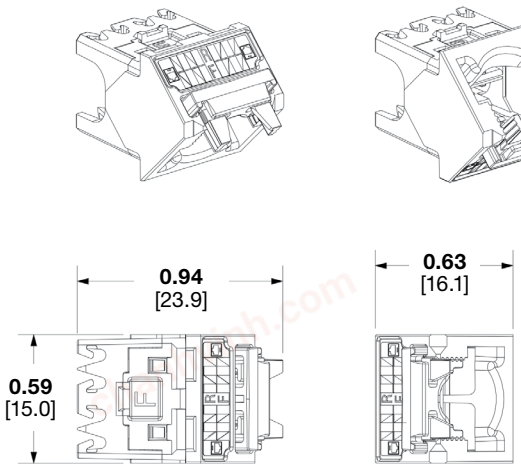

Left/Right 45° Shielded TG Wire Cap

CJSLRCAPBU-X and CJSLRCAPIW-X
(See Installation Instruction PN629)

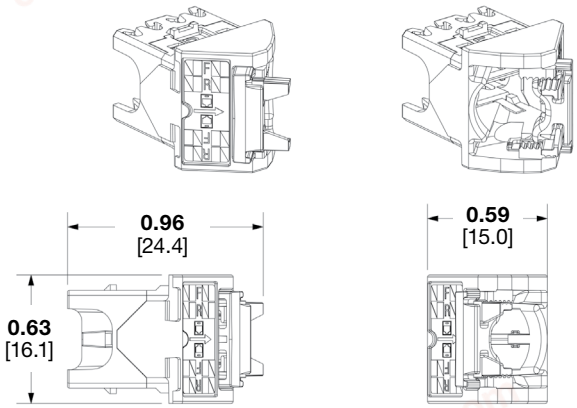

Dimensions are in inches. [Dimensions in brackets are metric].

chanhvinh.com

45° Angled Wire Caps for TX6A™/TX6™ PLUS Mini-Com® UTP/STP Jack Modules

Panduit Up/Down 45° Angled Wire Caps
Space Savings in Typical Wall Outlet Application
(UTP Shown, Shielded Similar)

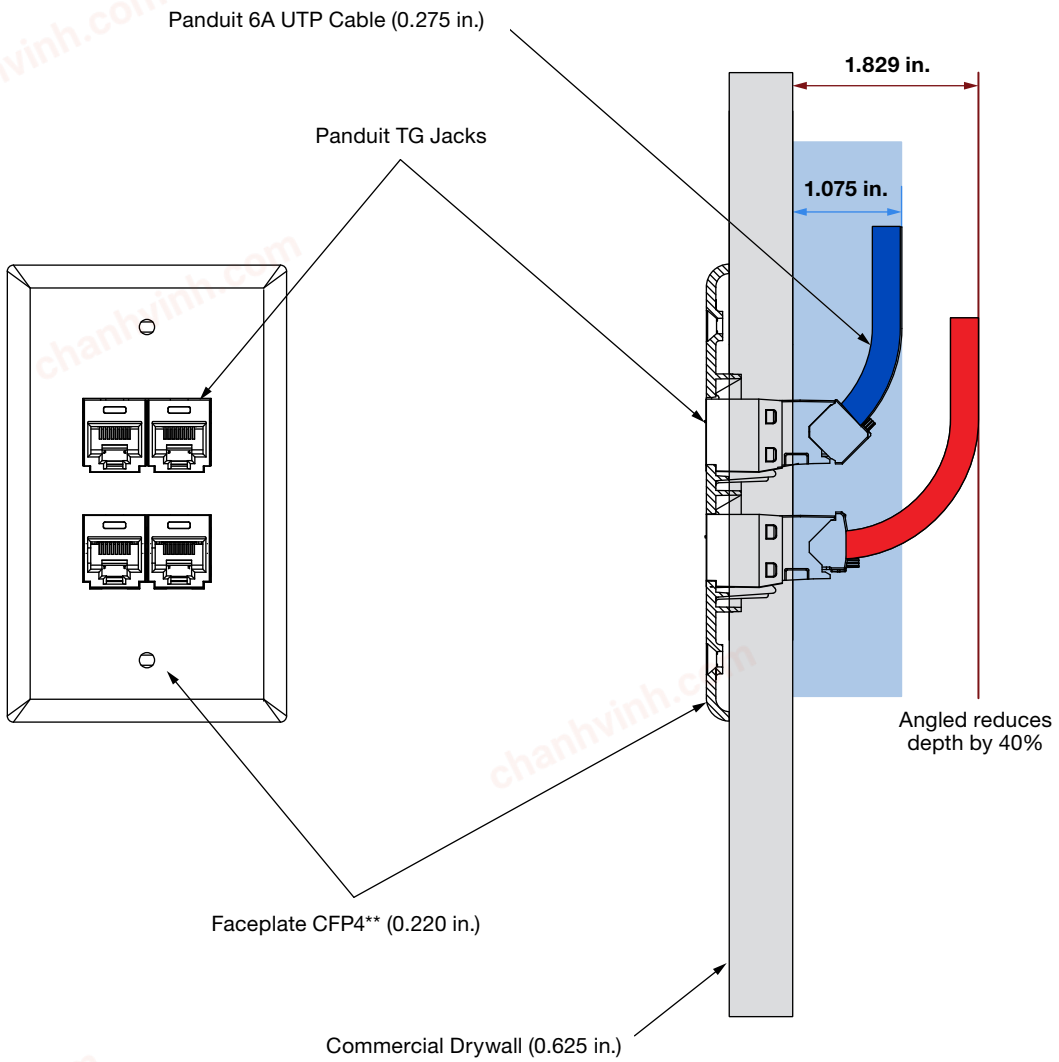

chanhvinh.com

45° Angled Wire Caps for TX6A™/TX6™ PLUS Mini-Com® UTP/STP Jack Modules

Panduit Left/Right 45° Angled Wire Caps
Space Savings in Typical Furniture Application
(UTP Shown, Shielded Similar)

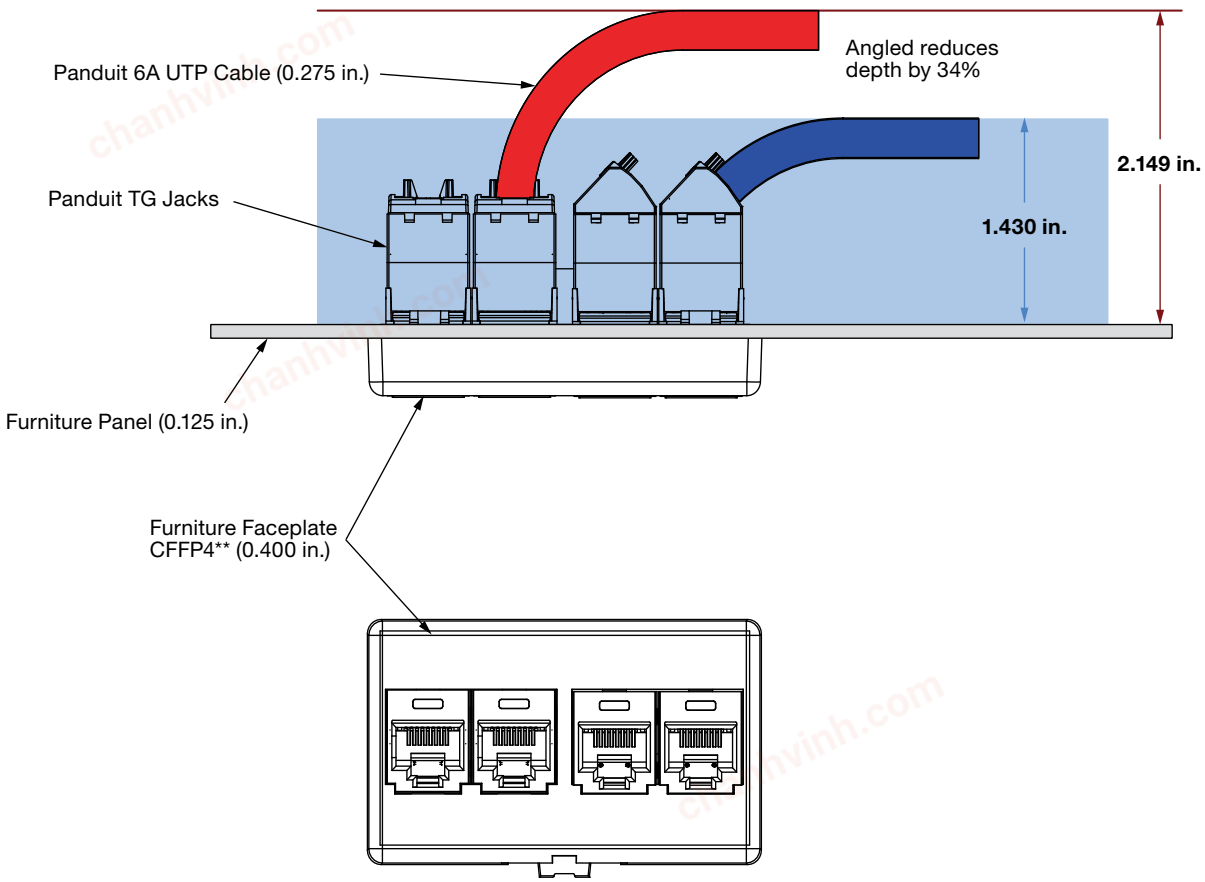

WORLDWIDE SUBSIDIARIES AND SALES OFFICES

PANDUIT US/CANADA
Phone: 800.777.3300

PANDUIT EUROPE LTD.
London, UK
Phone: 44.20.8601.7200

PANDUIT SINGAPORE PTE. LTD.
Republic of Singapore
Phone: 65.6305.7575

PANDUIT JAPAN
Tokyo, Japan
Phone: 81.3.6863.6000

PANDUIT LATIN AMERICA
Guadalajara, Mexico
Phone: 52.33.3777.6000

PANDUIT AUSTRALIA PTY. LTD.
Victoria, Australia
Phone: 61.3.9794.9020

For a copy of Panduit product warranties, log on to www.panduit.com/warranty

For more information
Visit us at www.panduit.com
Contact Customer Service by email: cs@panduit.com
or by phone: 800.777.3300

© 2024 Panduit Corp.
ALL RIGHTS RESERVED.
COSP457-WW-ENG
7/2024