chanhvinh.com

(((PaPIRs))) motion sensor

EKMC(VZ)series

Current consumption 170μA | Digital output



Standard detection type



Long distance detection type

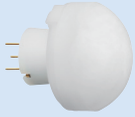

Wall installation type

○Economy type suitable for a wide range of applications

Recommended applications

Lighting control, lighting equipment, heaters,
ventilators or air conditioners,
security equipment for IP cameras,
intrusion alarms, digital signage, vending machines,
multi-function printers, display panels for meeting rooms, PCs

Lensless type available
170μA type: EKMC1600100

Specifications

Detection performance	Model no.	Current consumption	Lens color	Output type	Detection distance	Detection area		Detection zones
						Horizontal	Vertical	
Standard detection type 	EKMC1601111	170μA	White	Digital	5m	94°	82°	64
	EKMC1601112		Black					
	EKMC1601113		Pearl white					
Long distance detection type 	EKMC1603111		White		12m	102°	92°	92
	EKMC1603112		Black					
	EKMC1603113		Pearl white					
Wall installation type 	EKMC1604111		White		12m (1st step lens) 6m (2nd step lens) 3m (3rd step lens)	40°	105°	68
	EKMC1604112		Black					
	EKMC1604113		Pearl white					

■Ordering information

EKMC16□□1□□

- ●PaPIRs motion sensor
- ●Detection(Lens)
  00: Lensless / 01: 5m distance standard /
  03: 12m long distance / 04: Wall installation type
- ●Lens color
  0: Lensless / 1: White /
  2: Black / 3: Pearl white
- ●Lens
  0: Lensless / 1: with lens

Characteristics

■Maximum rated values

Items	Value
Power supply voltage	-0.3 to 7V
Ambient temperature	-20 to +60℃ (no frost, no condensation)
Storage temperature	-20 to +70℃

■Electrical characteristics

Items		Symbol	EKMC(VZ) type	Conditions
Operating voltage	Max	Vdd	6.0V	—
	Min		3.0V	
Current consumption (in standby mode) Note 1)	Ave	Iw	170μA	Ambient temperature: 25℃ Iout=0 Vdd: 5V
Output current (during detection) Note 2)	Max	Iout	100μA	Ambient temperature: 25℃ Vout≧Vdd-0.5
Output voltage (during detection period)	Min	Vout	Vdd-0.5V	Ambient temperature: 25℃ Open at no detection
Circuit stability time (when voltage is applied)	Max	Twu	30 sec	Ambient temperature: 25℃ Iout=0 Vdd: 5V

Note 1) Current consumption during detection period is the total value of current consumption in standby mode add to output current.
Note 2) Please select an output resistors (pull-down concept) in accordance with Vout so that the output current is lower than or equal to 100μA. If the output current is more than 100μA, this may cause false alarms.

Timing chart

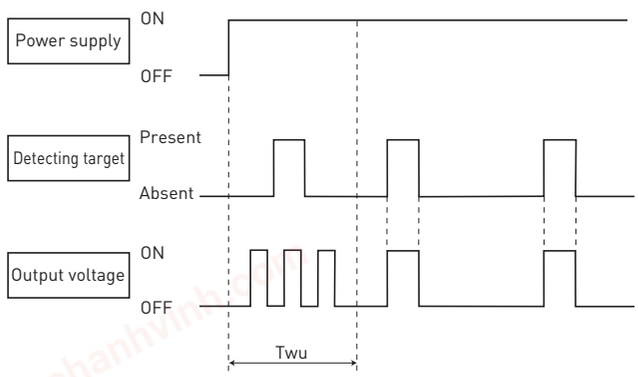

【Explanation of the timing】
Twu: Circuit stability time: max. 30 sec
During this stage, the output's status is undefined (ON/OFF) and detection is therefore not guaranteed.

chanhvinh.com

Lenses for the EKMB/EKMC series

Standard detection type

CAD data



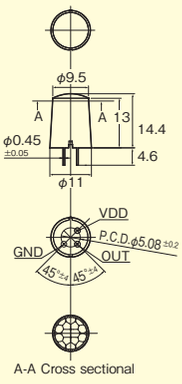

A-A Cross sectional

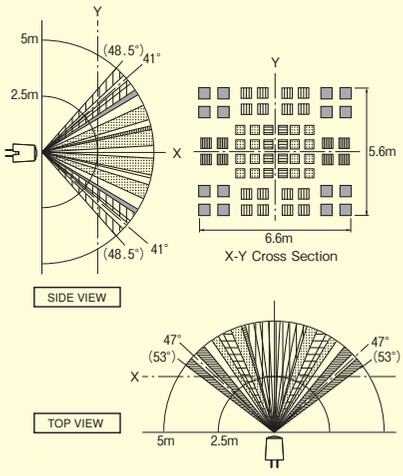

Detection distance	Max. 5m
Field of view	94°×82°
Detection zone	64 beams
Detection condition	·The temperature difference between the target and the surroundings must be higher than 4℃. ·Movement speed: 1.0m/s ·Target concept: Human body with an approx. size of 700×250mm ·Target moving direction: Crossing the detection beam.

Long distance detection type

CAD data



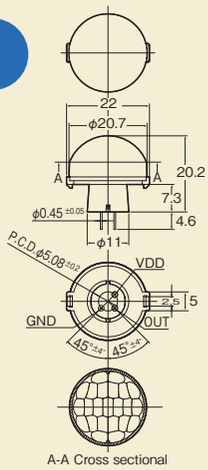

A-A Cross sectional

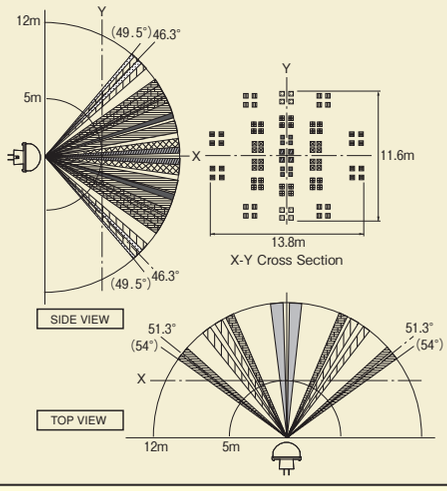

Detection distance	Max. 12m
Field of view	102°×92°
Detection zone	92 beams
Detection condition	·The temperature difference between the target and the surroundings must be higher than 4℃. ·Movement speed: 1.0m/s ·Target concept: Human body with an approx. size of 700×250mm ·Target moving direction: Crossing the detection beam.

Wall installation type

CAD data

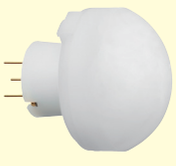

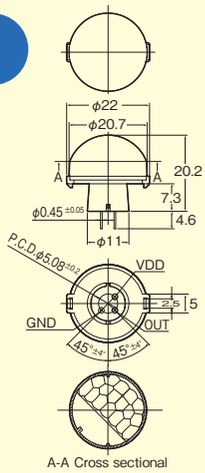

A-A Cross sectional

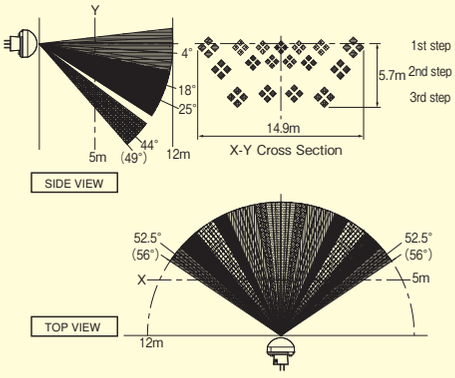

Detection distance	1st step lens	Max. 12m
	2nd step lens	Max. 6m
	3rd step lens	Max. 3m
Field of view	40°×105°	
Detection zone	68 beams	
Detection condition	·The temperature difference between the target and the surroundings must be higher than 4℃. ·Movement speed: 1.0m/s ·Target concept: Human body with an approx. size of 700×250mm ·Target moving direction: Crossing the detection beam.	

Lensless type



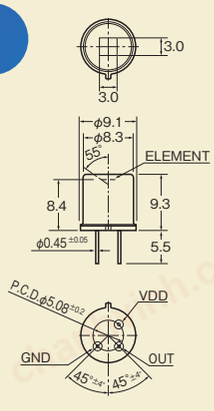

■PIR element

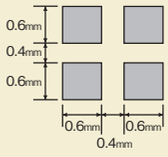

Detection sensitivity	Average: 5.6μW/㎠ Maximum: 7.6μW/㎠

※Detection sensitivity is measured by following system

■Test setup

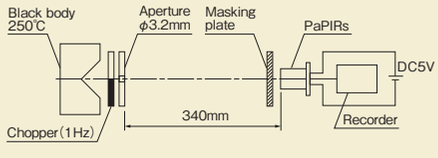

CAD data CAD data can be downloaded from the ((PaPIRs)) PaPIRs WEB site. Panasonic PaPIRs Search

Please refer to the formal specification for the dimension, and the tolerance ※Please note that the horizontal and vertical field of view depends on the position of the metal tab on which the lens is mounted.

chanhvinh.com

SATURN LENS –
Dual zone

NEW

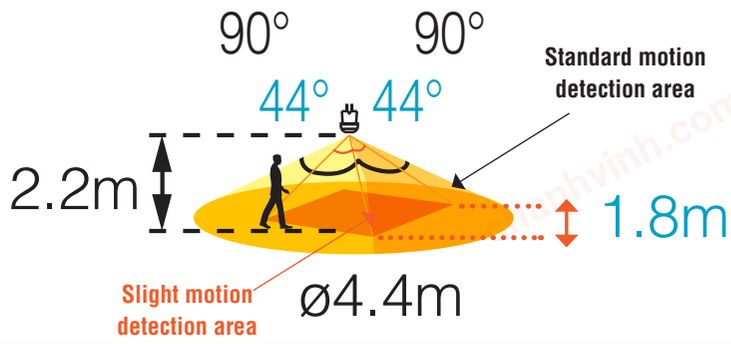



Standard and slight-motion detection type

▶ **Choose by the current consumption in standby mode** (1µA type: in sleep mode)		1µA	2µA	6µA	170µA	
▶ **Choose by output**		Digital			Digital	Analog
▶ **Choose by lens color**	White	EKMB1193111	EKMB1293111	EKMB1393111K	EKMC1693111	By request
	Black	EKMB1193112	EKMB1293112	EKMB1393112K	EKMC1693112	By request
	Pearl white	EKMB1193113	EKMB1293113	EKMB1393113K	EKMC1693113	By request

Saturn lens

Dimension (mm) | **Detection zone** | **Detection characteristics**

Standard and slight-motion detection type

CAD data by request



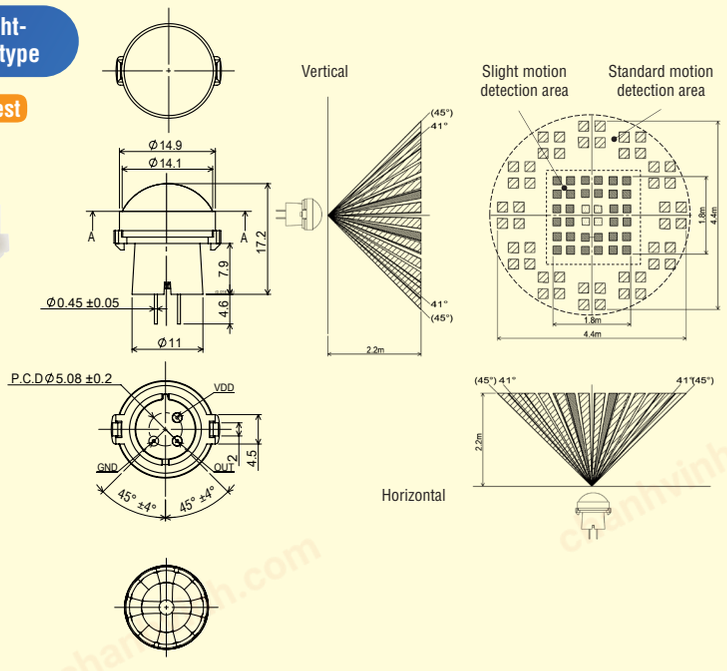

Detection distance	Max. 2.2m*	
Field of view	Slight motion	44° x 44°
	Standard motion	90° x 90°
Detection zone	Slight motion	36
	Standard motion	48
Detection condition ▲	Slight motion	• The temperature difference between the target and the surroundings must be higher than 4°C. • Movement speed: 0.5ms • Target concept: Human head with an approx. size of 200x200mm • Target moving direction: Crossing the detection beam, 1 zone
	Standard motion	• The temperature difference between the target and the surroundings must be higher than 4°C. • Movement speed: 1.0ms • Target concept: Human body with an approx. size of 400x200mm • Target moving direction: Crossing the detection beam, 2 zones

* Under specified detection conditions

▲ Please refer to "Caution for use" (page 13) and "Basic principles"(page 13, point 5), for more details

Please contact your local sales representative for detailed specifications.