chanhvinh.com

Panasonic INDUSTRY

Conductive Polymer Hybrid Aluminum Electrolytic Capacitors

UPGRADE

Radial Lead Type

ZF series **A** type



Hybrid

Features

- Endurance : 1000 h at 150 ℃ (High temperature)
- High temperature compared with ZC series
- High-withstand voltage (to 63 V), Low LC (0.01 CV)
- Equivalent to conductive polymer type Aluminum Electrolytic Capacitor (There are little characteristics change by temperature and frequency)
- Compatible with taping products for automatic insertion
- AEC-Q200 compliant
- RoHS compliant

Specifications

Size code	F	G
Category temp. range	−55 ℃ to +150 ℃	
Rated voltage range	25 V to 63 V	
Nominal cap.range	33 μF to 150 μF	56 μF to 270 μF
Capacitance tolerance	±20 % (120 Hz / +20℃)	
DC leakage current	I ≦ 0.01 CV (μA) After 2 minutes	
Dissipation factor (tan δ)	Please see the attached characteristics list	
Endurance	+150 ℃ ± 2 ℃, 1000 h, apply the rated ripple current without exceeding the rated voltage.	
	Capacitance change	Within ±30% of the initial value
	Dissipation factor (tan δ)	≦ 200 % of the initial limit
	ESR	≦ 200 % of the initial limit
	DC leakage current	Within the initial limit
	ESR after endurance (Ω / 100 kHz)(-40 ℃)	Size code: F 0.4, G 0.3
Shelf life	After storage for 1000 hours at +150 ℃ ± 2 ℃ with no voltage applied and then being stabilized at +20 ℃, capacitors shall meet the limits specified in endurance. (With voltage treatment)	
Damp heat (Load)	+85 ℃ ± 2 ℃, 85 % to 90 %RH, 2000 h, rated voltage applied	
	Capacitance change	Within ±30% of the initial value
	Dissipation factor (tan δ)	≦ 200 % of the initial limit
	ESR	≦ 200 % of the initial limit
	DC leakage current	Within the initial limit
Resistance to soldering heat	After flow soldering and then being stabilized at +20 ℃, capacitors shall meet the following limits.	
	Capacitance change	Within ±10% of the initial value
	Dissipation factor (tan δ)	Within the initial limit
	DC leakage current	Within the initial limit

Marking

Example : 25 V 150 μF
Marking color : BLACK

Negative polarity marking (−)

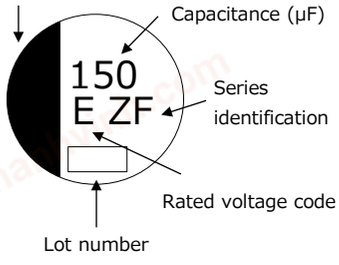

R. voltage code	Unit : V
E	25
V	35
H	50
J	63

Shape/taping dimensions

[Taping type]

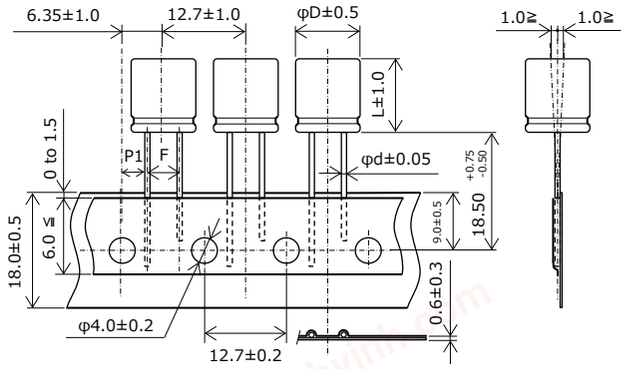

[Bulk type]

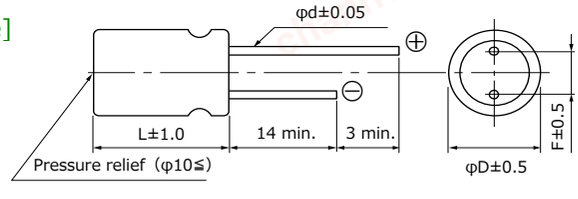

Unit : mm

Size code	φD	L	φd	F	P1
F	8.0	9.5	0.6	3.5±0.5	4.60±0.50
G	10.0	9.5	0.6	$5.0^{+0.8}_{-0.2}$	3.85±0.50

Design and specifications are each subject to change without notice. Ask factory for the current technical specifications before purchase and/or use.
Should a safety concern arise regarding this product, please be sure to contact us immediately.

chanhvinh.com

Characteristics list

Endurance : 150 ℃ 1000 h

Rated voltage (V)	Capacitance (±20 %) (μF)	Case size (mm)			Size code	Specification			Part number		Min.packaging q'ty (pcs)	
		φD	L	φd		Ripple current*1 (mA rms)	ESR*2 (mΩ)	tan δ*3	Taping type NEW	Bulk type	Taping	Bulk
25	150	8.0	9.5	0.6	F	800	27	0.14	EEHAZF1E151B	EEHAZF1E151	1000	200
	270	10.0	9.5	0.6	G	1000	20	0.14	EEHAZF1E271B	EEHAZF1E271	500	200
35	100	8.0	9.5	0.6	F	770	30	0.12	EEHAZF1V101B	EEHAZF1V101	1000	200
	150	10.0	9.5	0.6	G	950	23	0.12	EEHAZF1V151B	EEHAZF1V151	500	200
50	56	8.0	9.5	0.6	F	700	35	0.10	EEHAZF1H560B	EEHAZF1H560	1000	200
	100	10.0	9.5	0.6	G	900	28	0.10	EEHAZF1H101B	EEHAZF1H101	500	200
63	33	8.0	9.5	0.6	F	650	40	0.08	EEHAZF1J330B	EEHAZF1J330	1000	200
	56	10.0	9.5	0.6	G	840	30	0.08	EEHAZF1J560B	EEHAZF1J560	500	200

*1: Ripple current (100 kHz / +150 ℃)
*2: ESR (100 kHz / +20 ℃)
*3: tan δ (120 Hz / +20 ℃)
◆ Please refer to the page of “Flow soldering profile” and “The taping dimensions”.

Frequency correction factor for ripple current

Rated capacitance (C)	Frequency (f)	100 Hz ≦ f < 200 Hz	200 Hz ≦ f < 300 Hz	300 Hz ≦ f < 500 Hz	500 Hz ≦ f < 1 kHz
C < 47 μF	Correction factor	0.10	0.10	0.15	0.20
47 μF ≦ C < 150 μF		0.15	0.20	0.25	0.30
150 μF ≦ C		0.15	0.25	0.25	0.30

Rated capacitance (C)	Frequency (f)	1 kHz ≦ f < 2 kHz	2 kHz ≦ f < 3 kHz	3 kHz ≦ f < 5 kHz	5 kHz ≦ f < 10 kHz
C < 47 μF	Correction factor	0.30	0.40	0.45	0.50
47 μF ≦ C < 150 μF		0.40	0.45	0.55	0.60
150 μF ≦ C		0.45	0.50	0.60	0.65

Rated capacitance (C)	Frequency (f)	10 kHz ≦ f < 15 kHz	15 kHz ≦ f < 20 kHz	20 kHz ≦ f < 30 kHz	30 kHz ≦ f < 40 kHz
C < 47 μF	Correction factor	0.60	0.65	0.70	0.75
47 μF ≦ C < 150 μF		0.70	0.75	0.80	0.80
150 μF ≦ C		0.75	0.80	0.85	0.85

Rated capacitance (C)	Frequency (f)	40 kHz ≦ f < 50 kHz	50 kHz ≦ f < 100 kHz	100 kHz ≦ f < 500 kHz	500 kHz ≦ f
C < 47 μF	Correction factor	0.80	0.85	1.00	1.05
47 μF ≦ C < 150 μF		0.85	0.90	1.00	1.00
150 μF ≦ C		0.85	0.90	1.00	1.00

Design and specifications are each subject to change without notice. Ask factory for the current technical specifications before purchase and/or use.
Should a safety concern arise regarding this product, please be sure to contact us immediately.

chanhvinh.com

Panasonic INDUSTRY

Guidelines and precautions regarding the technical information and use of our products described in this online catalog.

- If you want to use our products described in this online catalog for applications requiring special qualities or reliability, or for applications where the failure or malfunction of the products may directly jeopardize human life or potentially cause personal injury (e.g. aircraft and aerospace equipment, traffic and transportation equipment, combustion equipment, medical equipment, accident prevention, anti-crime equipment, and/or safety equipment), it is necessary to verify whether the specifications of our products fit to such applications. Please ensure that you will ask and check with our inquiry desk as to whether the specifications of our products fit to such applications use before you use our products.

- The quality and performance of our products as described in this online catalog only apply to our products when used in isolation. Therefore, please ensure you evaluate and verify our products under the specific circumstances in which our products are assembled in your own products and in which our products will actually be used.

- If you use our products in equipment that requires a high degree of reliability, regardless of the application, it is recommended that you set up protection circuits and redundancy circuits in order to ensure safety of your equipment.

- The products and product specifications described in this online catalog are subject to change for improvement without prior notice. Therefore, please be sure to request and confirm the latest product specifications which explain the specifications of our products in detail, before you finalize the design of your applications, purchase, or use our products.

- The technical information in this online catalog provides examples of our products' typical operations and application circuits. We do not guarantee the non-infringement of third party's intellectual property rights and we do not grant any license, right, or interest in our intellectual property.

- If any of our products, product specifications and/or technical information in this online catalog is to be exported or provided to non-residents, the laws and regulations of the exporting country, especially with regard to security and export control, shall be observed.

<Regarding the Certificate of Compliance with the EU RoHS Directive/REACH Regulations>

- The switchover date for compliance with the RoHS Directive/REACH Regulations varies depending on the part number or series of our products.

- When you use the inventory of our products for which it is unclear whether those products are compliant with the RoHS Directive/REACH Regulation, please select "Sales Inquiry" in the website inquiry form and contact us.

We do not take any responsibility for the use of our products outside the scope of the specifications, descriptions, guidelines and precautions described in this online catalog.

chanhvinh.com

Notices

■ Applicable laws and regulations

・This product complies with the RoHS Directive (Restriction of the use of certain hazardous substances in electrical and electronic equipment (DIRECTIVE 2011/65/EU and (EU)2015/863)).
・No Ozone Depleting Chemicals(ODC's), controlled under the Montreal Protocol Agreement, are used in producing this product.
We do not use PBBs or PBDEs as brominated flame retardants.
・Export procedure which followed export related regulations, such as foreign exchange and a foreign trade method, on the occasion of export of this product.
・These products are not dangerous goods on the transportation as identified by UN(United Nations) numbers or UN classification.

■ Limited applications

・This capacitor is designed to be used for electronics circuits such as audio/visual equipment, home appliances, computers and other office equipment, optical equipment, measuring equipment.
・An advanced specification must be signed individually for high-reliability use that might threaten human life or property due to a malfunction of the capacitor.

■ Intellectual property rights and licenses

・The technical information in this specification provides examples of our products' typical operations and application circuits. We do not guarantee the non-infringement of third party's intellectual property rights and we do not grant any license, right, or interest in our intellectual property.

Items to be observed

■ For specification

・This specification guarantees the quality and performance of the product as individual components.
The durability differs depending on the environment and the conditions of usage.
Before use, check and evaluate their compatibility with actual conditions when installed in the products.
When safety requirements cannot be satisfied in your technical examination, inform us immediately.
・Do not use the products beyond the specifications described in this document.

■ Upon application to products where safety is regarded as important

Install the following systems for a failsafe design to ensure safety if these products are to be used in equipment where a defect in these products may cause the loss of human life or other signification damage, such as damage to vehicles (automobile, train, vessel), traffic lights, medical equipment, aerospace equipment, electric heating appliances, combustion/ gas equipment, rotating rotating equipment, and disaster/crime prevention equipment.

(1) The system is equipped with a protection circuit and protection device.
(2) The system is equipped with a redundant circuit or other system to prevent an unsafe status in the event of a single fault.

■ Conditions of use

・Before using the products, carefully check the effects on their quality and performance, and determined whether or not they can be used. These products are designed and manufactured for general-purpose and standard use in general electronic equipment. These products are not intended for use in the following special conditions.

(1) In liquid, such as Water, Oil, Chemicals, or Organic solvent.
(2) In direct sunlight, outdoors, or in dust.
(3) In vapor, such as dew condensation water of resistive element, or water leakage, salty air, or air with a high concentration corrosive gas, such as Cl_2, H_2S, NH_3, SO_2, or NOx.
(4) In an environment where strong static electricity or electromagnetic waves exist.
(5) Mounting or placing heat-generating components or inflammables, such as vinyl-coated wires, near these products.
(6) Sealing or coating of these products or a printed circuit board on which these products are mounted, with resin and other material.
(7) Using resolvent, water or water-soluble cleaner for flux cleaning agent after soldering. (In particular, when using water or a water-soluble cleaning agent, be careful not to leave water residues)
(8) Using in the atmosphere where strays acid or alkaline.
(9) Using in the atmosphere where there are excessive vibration and shock.
(10) Using in the atmosphere where there are low pressure or decompression.

・Please arrange circuit design for preventing impulse or transitional voltage.
Do not apply voltage, which exceeds the full rated voltage when the capacitors receive impulse voltage, instantaneous high voltage, high pulse voltage etc.
・Our products there is a product are using an electrolyte solution. Therefore, misuse can result in rapid deterioration of characteristics and functions of each product. Electrolyte leakage damages printed circuit and affects performance, characteristics, and functions of customer system.

chanhvinh.com

⚠ Application guidelines (Hybrid)

1. Circuit design

1.1 Operating temperature and frequency

Electrical characteristics of the capacitor are likely to change due to variation in temperature and/or frequency. Circuit designers should take these changes into consideration.

(1) Effects of operating temperature on electrical parameters

At higher temperatures : leakage current and capacitance increase while equivalent series resistance (ESR) decreases.

At lower temperatures : leakage current and capacitance decrease while equivalent series resistance (ESR) increases.

(2) Effects of frequency on electrical parameters

At higher frequencies : capacitance and impedance decrease while tan d increases.

At lower frequencies : heat generated by ripple current will rise due to an increase in equivalent series resistance (ESR).

1.2 Operating temperature and life expectancy

(1) Expected life is affected by operating temperature. Generally, each 10 °C reduction in temperature will double the expected life. Use capacitors at the lowest possible temperature below the upper category temperature.

(2) If operating temperatures exceed the upper category limit, rapid deterioration of electrical parameter will occur and irreversible damage will result.
Check for the maximum capacitor operating temperatures including ambient temperature, internal capacitor temperature rise due to ripple current, and the effects of radiated heat from power transistors, IC's or resistors.
Avoid placing components, which could conduct heat to the capacitor from the back side of the circuit board.

(3) The formula for calculating expected life at lower operating temperatures is as follows ;

$$L_2 = L_1 \times 2^{\frac{T_1 - T_2}{10}}$$

L_1 : Guaranteed life (h) at temperature, T_1 ℃
L_2 : Expected life (h) at temperature, T_2 ℃
T_1 : Upper category temperature + temperature rise due to rated ripple current (℃)
T_2 : Actual operating temperature, ambient temperature + temperature rise due to ripple current (℃)

(4) Using the capacitor beyond the rated lifetime will result in short circuit, electrolyte leak, vent open, and large deterioration of characteristics. The lifetime cannot exceed 15 years due to aging of sealing rubber.

1.3 Load conditions to avoid

The following load conditions will cause rapid deterioration of capacitor's electrical characteristics.
In addition, instantaneous heating and gas generation within the capacitor may cause an operation of pressure relief vent, and that results in electrolyte leaks, explosion and/or fire ignition.
The leaked electrolyte is combustible and electrically conductive.

(1) Reverse voltage
DC capacitors have polarity. Therefore, do not apply the reverse voltage. Find the correct polarity before insertion.

(2) Charge / Discharge applications
General purpose capacitors are not suitable for use in repeating charge/discharge applications. For such applications, consult a sales representative with actual application condition. Rush current must not exceed 100 A.

(3) ON-OFF circuit
When using capacitors in circuit where ON-OFF switching is repeated more than 10,000 times a day, consult a sales representative with actual application condition for an appropriate choice of capacitors.

(4) Over voltage
Do not apply a voltage exceeding the rated voltage. The rated surge voltage can be applied only for a short time. Make sure that a sum of the DC voltage and the superimposed AC ripple voltage does not exceed the rated voltage.

(5) Ripple current
Do not apply ripple currents exceeding the rated value.
Make sure that rated ripple currents superimposed on low DC bias voltages do not cause reverse voltage conditions. Even if the current is below the rated ripple current, using the capacitor for longer than the rated lifetime will cause ESR increase and internal generation of heat, which may eventually lead to vent open, bulging of case/rubber, electrolyte leak, shot circuit, explosion, or ignition in the worst case.

chanhvinh.com

1.4 Using two or more capacitors in parallel

Because the hybrid aluminum electrolytic capacitors have very small impedance, various circuit board pattern of wiring to each capacitor may cause unbalanced ripple current loads among the parallel capacitors. Careful wiring methods can minimize the potential risk of an excessive ripple current concentrated to one capacitor.
The capacitors cannot be used in series.

1.5 Capacitor mounting considerations

(1) For double sided circuit boards, avoid wiring patterns passing between the mounted capacitor and the circuit board. When a radial lead type capacitor is dipped into a solder bath, an excess solder may deposit under the capacitor by capillary action, causing short circuit between anode and cathode terminals. Also, lead holes must be placed with special care for radial lead type capacitors because laminate on capacitor's surface may become damaged during flow process.
(2) The pitch between circuit board holes should match the lead wire pitch of the radial lead type capacitors within the specified tolerances. Unmatched pitch may cause an excessive stress on lead wires during the insertion process and result in short/open circuit, increased leakage current, or electrolyte leak.
(3) Clearance for case mounted pressure relief (≧ φ10 mm)
Capacitors with case mounted pressure relief require sufficient clearance to allow for proper pressure relief operation. The minimum clearance are dependent on capacitor diameters as follows.
* ≧φ10 mm : 2 mm minimum
(4) Wiring near the pressure relief (≧ φ10 mm)
Avoid locating high voltage or high current wiring or circuit board paths above the pressure relief. Flammable, high temperature gas that exceeds 100 ℃ may be released which could dissolve the wire insulation and ignite.
(5) Circuit board patterns under the capacitor
Avoid circuit board runs under the capacitor, as an electrical short can occur due to an electrolyte leakage.
(6) Resonant vibration after circuit board's production may make a heavy load on the capacitor and cause rapid change in characteristics and/or capacitor's break.

1.6 Electrical isolation

Electrically isolate the capacitor's case from cathode terminals, as well as circuit patterns.

1.7 Capacitor coating

The laminate coating is intended for marking and identification purposes and is not meant to electrically insulate the capacitor.

2. Capacitor handling techniques

2.1 Considerations before using

(1) Capacitors have a finite life. Do not reuse or recycle capacitors from used equipment.
(2) Transient recovery voltage may be generated in the capacitor due to dielectric absorption.
If required, this voltage can be discharged with a resistor with a value of about 1 kΩ.
(3) Capacitors stored for a long period of time may exhibit an increase in leakage current.
This can be corrected by gradually applying rated voltage in series with a resistor of approximately 1 kΩ.
(4) If capacitors are dropped, they can be damaged mechanically or electrically. Avoid using dropped capacitors.
(5) Dented or crushed capacitors should not be used.
The seal integrity can be damaged and loss of electrolyte/ shortened life can result.

2.2 Capacitor insertion

(1) Verify the correct capacitance and rated voltage of the capacitor.
(2) Verify the correct polarity of the capacitor before insertion.
(3) Verify the correct terminal dimension and land pattern size for surface mount type, or holes' pitch for radial lead type before mount to avoid short circuit, stress on terminals, and/or lack of terminal strength.
(4) Excessive mounting pressure can cause high leakage current, short circuit, or disconnection.
(5) When using a mounter for radial lead type, avoid cutter wear and acute angle of lead-bending with respect to circuit board. That may create excessive stress and pull the lead to damage the capacitor.

2.3 Reflow soldering (for surface mount type)

(1) Surface-mount type capacitor are exclusively for reflow soldering.
When reflow solder is used an ambient heat condition system such as the simultaneous use of infrared and hot-air is recommended.
(2) Observe proper soldering conditions (temperature, time, etc.). Do not exceed the specified limits.
If the peak temperature is high or if the heating time is long, it may cause deterioration of the electrical characteristics and life characteristics.
Recommended soldering condition is a guideline for ensuring the basic characteristics of the components, but not for the stable soldering conditions. Conditions for proper soldering should be set up according to individual conditions.
✻ The Temperature on capacitor top shall be measured by using thermal couple that is fixed firmly by epoxy glue.

chanhvinh.com

(3) In case of use in 2 times reflow, 2nd reflow must be done when the capacitor's temperature return back to normal level.
(4) In our recommended reflow condition , the case discoloration and the case swelling might be slightly generated. But please acknowledge that these two phenomena do not influence the reliability of the product.
(5) The crack on top marking might be occurred by reflow heat stress.
But please acknowledge that it does not influence the reliability of the product.
(6) VPS (Vapor Phase Soldering) reflow can cause significant characteristics change and/ or mounting failure due to deformation by acute temperature rise.
VPS is acceptable provided that the process does not exceed recommended reflow profile and temperature rise is less than 3 ℃ / sec. Please contact Panasonic for detailed conditions.
(7) The vibration-proof capacitors of size Φ6.3 has support terminals extending from the bottom side to the lead edge. Then, make sure to find appropriate soldering conditions to form fillet on the support terminals if required for appearance inspection. However, even if sufficient solder fillets are not observed, the reliability of vibration-proof will not be lowered because the support terminals on the bottom side enhance the solder joint to PCB.

2.4 Flow soldering (for radial type)

(1) Radial lead type capacitors cannot apply to reflow soldering.
(2) Do not immerse the capacitor body into the solder bath as excessive internal pressure could result.
(3) Apply proper soldering conditions (temperature, time, etc.). Do not exceed the specified limits.
(4) Do not allow other parts or components to touch the capacitor during soldering.
(5) When mounting the radial type being touched to PCB, be sure to check the appearance of solder under the sealing rubber, which does not have an airflow structure.

2.5 Manual soldering

(1) Observe temperature and time soldering specifications or do not exceed temperature of 350 °C for 3 seconds or less.
(2) If a soldered capacitor must be removed and reinserted, avoid excessive stress on the capacitor leads.
(3) Avoid physical contacts between the tip of the soldering iron and capacitors to prevent or capacitor failure.
(4) When bending lead wires of radial type capacitors to match the hole pitch on PCB, avoid applying excessive stress to the capacitor body.

2.6 Capacitor handling after soldering

(1) Avoid moving the capacitor after soldering to prevent excessive stress on the lead wires where they enter the seal. The capacitor may break from element portion due to a torque at outer rim, causing a large stress to terminals.
(2) Do not use the capacitor as a handle when moving the circuit board assembly. The total weight of the board would apply to element portion through terminals, and the capacitor may break.
(3) Avoid striking the capacitor after assembly to prevent failure due to excessive shock. The capacitor may break due to excessive shock or load above specified range.

2.7 Circuit board cleaning

(1) Circuit boards can be immersed or ultrasonically cleaned using suitable cleaning solvents for up to 5 minutes and up to 60 °C maximum temperatures. The boards should be thoroughly rinsed and dried. The use of ozone depleting cleaning agents is not recommended for the purpose of protecting our environment.
【Target solvent】
Pine Alpha ST-100S, Aqua Cleaner 210SEP, Clean-thru 750H / 750L / 710M, Sunelec B-12, Sunelec B-12, Cold Cleaner P3-375, Techno Cleaner 219, DK Be-clear CW-5790, Telpene Cleaner EC-7R, Technocare FRW-17 / FRW-1 / FRV-1
(2) Avoid using the following solvent groups unless specifically allowed in the specification ;
(a) Halogenated based solvents : may permeate the seal and cause internal corrosion.
Especially, 1-1-1 trichloroethane must not be used on any aluminum electrolytic capacitors.
(b) Alkaline based solvents : may dissolve and react to the aluminum case.
(c) Petroleum based solvents : may deteriorate the sealing rubber
(d) Xylene : may deteriorate the sealing rubber
(e) Acetone : may erase the markings on the capacitor top
(3) A thorough drying after cleaning is required to remove residual cleaning solvents that may be trapped between the capacitor and the circuit board. Avoid drying temperatures, which exceed the upper category temperature of the capacitor.
(4) Monitor the contamination levels of cleaning solvents during use in terms of electrical conductivity, pH, specific gravity, and water content. Inside the capacitor may corrode with high density of chlorine. Control the flux density in the cleaning agent to be less than 2 mass%.
(5) Depending on the cleaning method, the marking on a capacitor may be erased or blurred.
※ Please consult us if you are not certain about acceptable cleaning solvents or cleaning methods.

chanhvinh.com

2.8 Mounting adhesives and coating agents

When using mounting adhesives or coating agents to control humidity, avoid using materials containing halogenated solvents.
Also, avoid the use of chloroprene based polymers.
Cure or dry out the coating agents thoroughly, and do not leave any solvents. Make sure to dry out cleaning agents completely immediately after washing the circuit board if the capacitors are mounted afterward, so that the solvents are not left under the capacitor body. Also, leave more than 1/3 of the sealing portion open, and do not cover that portion with any adhesives or coating.

2.9 Fumigation

In exporting electronic appliances with aluminum electrolytic capacitors, in some cases fumigation treatment using such halogen compound as methyl bromide is conducted for wooden boxes.
If such boxes are not dried well, the halogen left in the box is dispersed while transported and enters in the capacitors inside.
This possibly causes electrical corrosion of the capacitors. Therefore, after performing fumigation and drying make sure that no halogen is left.
Don't perform fumigation treatment to the whole electronic appliances packed in a box.

2.10 Flux

If you use a halogen type (Chlorine type, Bromine type, etc.) high-activity flux, please use it after confirmation in advance, as it may have an impact on performance and reliability of this product due to the residue of the flux.

3. Precautions for using capacitors

3.1 Environmental conditions

Capacitors should not be stored or used in the following environments.
(1) Exposure to temperatures above the upper category or below the lower category temperature of the capacitor.
(2) Direct contact with water, salt water, or oil.
(3) High humidity conditions where water could condense on the capacitor.
(4) Exposure to toxic gases such as hydrogen sulfide, sulfuric acid, nitric acid, chlorine, chlorine compound, bromine, bromine compound or ammonia.
(5) Exposure to ozone, radiation, or ultraviolet rays.
(6) Vibration and shock conditions exceeding specified requirements.
Even within the specified requirements, a large vibration acceleration may be applied due to resonance, so be sure to evaluate and confirm with the actual product.

3.2 Electrical precautions

(1) Avoid touching the terminals of a capacitor as a possible electric shock could result. The exposed aluminum case is not insulated and could also cause electric shock if touched.
(2) Avoid short circuiting the area between the capacitor terminals with conductive materials including liquids such as acids or alkaline solutions.
(3) A low-molecular-weight-shiroxane which is included in a silicon material shall causes abnormal electrical characteristics.

4. Emergency procedures

(1) If the pressure relief of the capacitor operates, immediately turn off the equipment and disconnect from the power source.
This will minimize an additional damage caused by the vaporizing electrolyte.
(2) Avoid contact with the escaping electrolyte gas, which can exceed 100 °C temperatures.
If electrolyte or gas enters the eye, immediately flush the eye with large amounts of water.
If electrolyte or gas is ingested by mouth, gargle with water.
If electrolyte contacts the skin, wash with soap and water.

5. Long term storage

(1) Leakage current of a capacitor tends to increase after a long-term storage due to dielectric dissolution, and very high current may flow at the first voltage load. However, applying voltage will form the dielectric, and the leakage current will decrease. Expiration date is 42 months from the outgoing inspection date.
Storage condition is to keep in room temperature (5 ℃ to 35 ℃) and humidity (45 % to 85 %) with no direct sunshine.
(2) Environmental conditions
Do not store under condition outside the area described in the specification, and also under conditions listed below.
(a) Exposure to temperatures above the upper category or below the lower category temperature of the capacitor.
(b) Direct contact with water, salt water, or oil.
(c) High humidity conditions where water could condense on the capacitor.
(d) Exposure to toxic gases such as hydrogen sulfide, sulfuric acid, nitric acid, chlorine, Chlorine compound, Bromine, Bromine compound or ammonia.
(e) Exposure to ozone, radiation, or ultraviolet rays.
(f) Vibration and shock conditions exceeding specified requirements.

chanhvinh.com

6. Capacitor disposal

When disposing capacitors, use one of the following methods.
(1) Incinerate after crushing the capacitor or puncturing the can wall (to prevent explosion due to internal pressure rise).
(2) Dispose as solid waste.

NOTE : Local laws may have specific disposal requirements which must be followed.

The precautions in using aluminum electrolytic capacitors follow the "Safety application guide for the use in fixed aluminum electrolytic capacitors for electronic equipment", RCR-2367D issued by JEITA in October 2017.
Please refer to the above application guide for details.

■ AEC-Q200 compliant

The products are tested based on all or part of the test conditions and methods defined in AEC-Q200. Please consult with Panasonic for the details of the product specification and specific evaluation test results, etc., and please review and approve Panasonic's product specification before ordering.

✻ Intellectual property right

We, Panasonic Group are providing the product and service that customers can use without anxiety, and are working positively on the protection of our products under intellectual property rights.

Representative patents relating to Conductive Polymer Hybrid Aluminum Electrolytic Capacitors are as follows:

US Patent	No.7497879, No.7621970, No.9208954
JP Patent	No.5360250
EP Patent	No.1808875