chanhvinh.com

Panasonic INDUSTRY

Solid State Relays

AQ-A RELAYS (AC output type)

Load current up to Max. 40 A in the series, Small Screw Terminal SSR

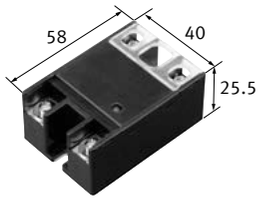

(Unit: mm)

FEATURES

- Compact size: W 40 × L 58 × H 25.5 mm
- With terminal cover for safety (output side only)
  Note: Cover on input side available as option.
- Mounting pitch: 47.5 mm
- Built in varistor for excellent surge absorption
- With LED indication for operation status verification
- Safety standards
  - C-UL (UL508, UL60950-1) certified
  - VDE (EN62368-1) reinforced insulation certified

TYPICAL APPLICATIONS

- Heater control
  Business use: Cooking machine, Vending machine, Freezer and Refrigerator
  Industrial use: Molding machine, Temperature controlled bath, Printing machine and Packing machine

ORDERING INFORMATION (PART NO.)

AQA □ □ □ □

- □ Output current
  2: 15A
  4: 25A
  6: 40A
- □ Load voltage, Type
  1: 75 to 250 Vrms, Screw terminal, Zero-cross
  2: 75 to 250 Vrms, Screw terminal, Random*
- □ Control voltage
  1: 4 to 32 V DC
- □ Functions
  VL: Built-in varistor and LED indication

* Random type is available by custom order.

TYPES

■ AQ-A Solid State Relays

Type	Load current	Load voltage	Control voltage	Part No.	Standard Packing
Zero–cross	15 A	75 to 250 Vrms	4 to 32 V DC	AQA211VL	Carton: 2 pcs. Case: 60 pcs.
	25 A			AQA411VL	
	40 A			AQA611VL	

Note: Random type also available. Please contact our sales representative.

©Panasonic Corporation 2022

chanhvinh.com

Solid State Relays AQ-A RELAYS (AC output type)

■ OPTION

Type	Part No.	Standard Packing	
		Carton	Case
Standard heat sink (15 A)	AQP813	5 pcs.	20 pcs.
Standard heat sink (25 A)	AQP814	5 pcs.	20 pcs.
Standard heat sink (40 A)	AQP815	No carton	5 pcs.
Slim heat sink (45 mm wide) (Mountable on a DIN rail)	AQP812	No carton	8 pcs.
DIN rail mounting plate	AQP809	No carton	50 pcs.
Terminal cover	AQA801	No carton	50 pcs.
Mounting rail	ATA48011	1 pcs.	100 pcs.
Fastening plate	ATA4806	1 pcs.	200 pcs.

RATING

■ Ratings (Measurement condition: at 20℃, Input ripple: 1% or less)

Item \ Part No.		AQA211VL	AQA411VL	AQA611VL	Remarks
Input side	Control voltage	4 to 32 V DC			
	Input current	Max. 20 mA			
	Drop–out voltage	Min. 1 V			
Output side	Max. load current	15 A	25 A	40 A	
	Load voltage	75 to 250 Vrms			
	Frequency	45 to 65 Hz			
	Non–repetitive surge current	150 A	250 A	400 A	In one cycle at 60 Hz
	"OFF–state" leakage current	Max. 10 mA			at 60 Hz
	"ON–state" voltage drop	Max. 1.6 V			at Max. carrying current
	Min. load current*	100 mA			

* When the load current is less than the rated minimum load current, please refer to "Cautions for Use of Solid State Relays".

■ Characteristics (Measurement condition: at 20℃, Input ripple: 1% or less)

Item \ Part No.	AQA211VL	AQA411VL	AQA611VL	Remarks
Operate time	Max. 1/2 cycle of voltage sine wave +1 ms			
Release time	Max. 1/2 cycle of voltage sine wave +1 ms			
Insulation resistance	Min. 100 MΩ between input and output			at 500 V DC
Breakdown voltage	4,000 Vrms between input and output 2,500 Vrms between input, output and case			for 1 minute
Vibration resistance (Functional)	10 to 55 Hz double amplitude of 1.5 mm			X, Y, Z axes
Shock resistance (Functional)	Min. 980 m/s²			X, Y, Z axes
Ambient temperature	–20 to +80℃			Non–icing and non–condensing
Storage temperature	–20 to +85℃			Non–icing and non–condensing
Operational method	Zero–cross (Turn ON and Turn OFF)			

©Panasonic Corporation 2022

chanhvinh.com

REFERENCE DATA

1. Load current vs. ambient temperature characteristics
   Use load current within range specified in the figure below.

Tested condition:
With external heat sink
When using standard heat sink (AQP815, AQP814, AQP813, AQP812)
1) If attached to a heat sink, use a heat conductive compound (Ex. Momentive Performance Materials Inc. YG6111 or TSK5303) of similar coating to improve cooling.

Without external heat sink
If the mounting surface is not metallic and a heat sink is not used, expose the bottom surface and plate surface to improve heat dissipation.

15 A type (AQA211VL)

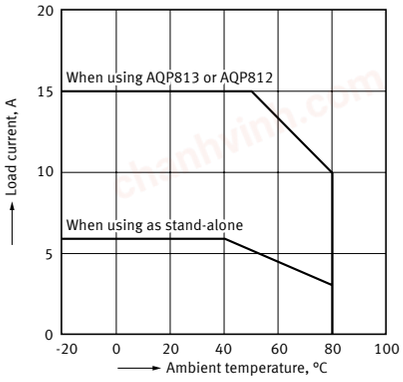

25 A type (AQA411VL)

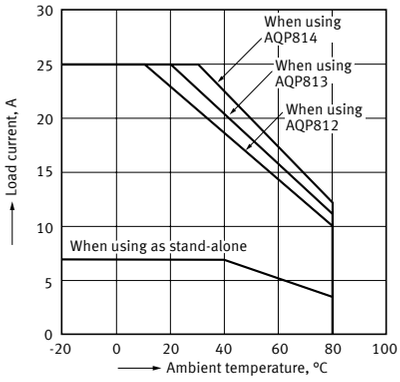

40 A type (AQA611VL)

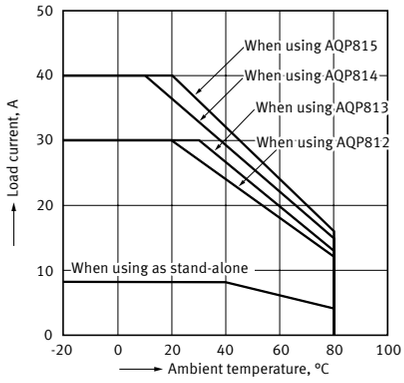

2. Non–repetitive surge current vs. carrying time characteristics*

Ambient temperature: 20°C

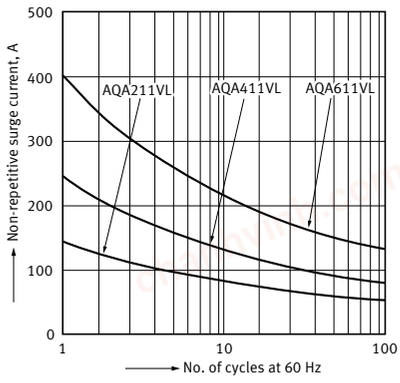

3. Input current vs. input voltage characteristics

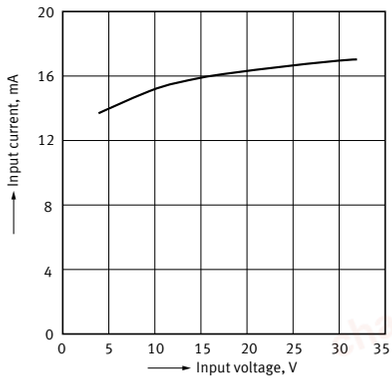

* The above chart shows non–repetitive maximum rating.
If a surge current is applied repeatedly, please keep it approximately 50% or less than the values shown in the above graph.

DIMENSIONS

CAD The CAD data of the products with a "CAD" mark can be downloaded from our Website. Unit: mm

CAD



External dimensions

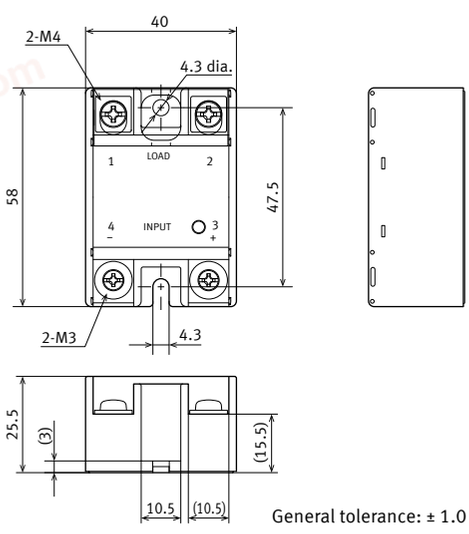

Mounting hole pattern

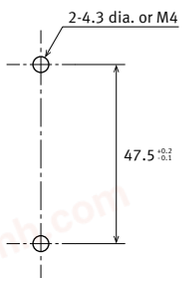

General tolerance: ± 1.0

©Panasonic Corporation 2022

chanhvinh.com

Solid State Relays AQ-A RELAYS (AC output type)

OPTION Unit: mm

■ Slim heat sink (AQP812)

CAD

External dimensions



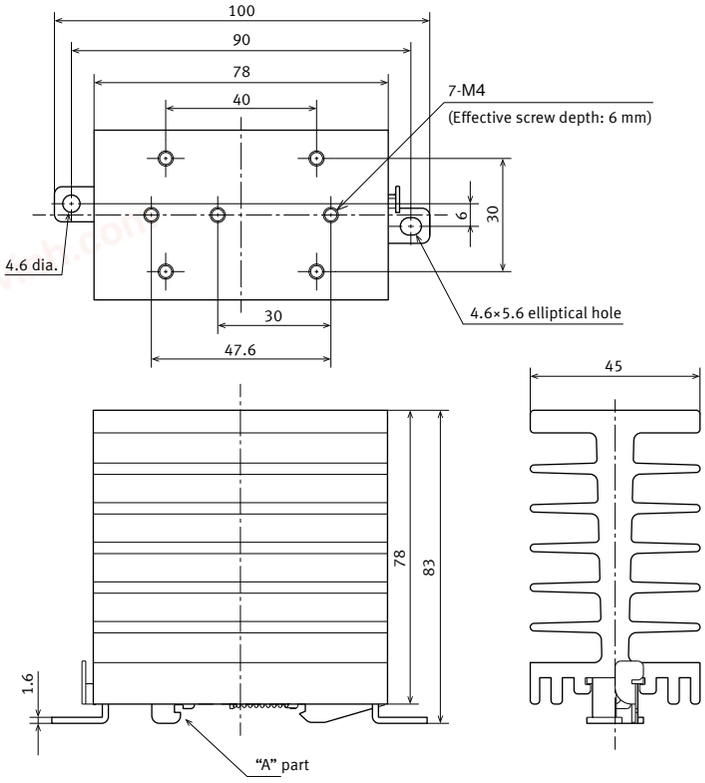

Mounting hole pattern

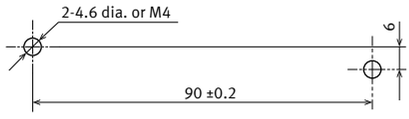

Note: When using on a DIN rail, please install so that the "A" part is on top. General tolerance: ±1.0

■ Standard heat sink (AQP813)

CAD

External dimensions



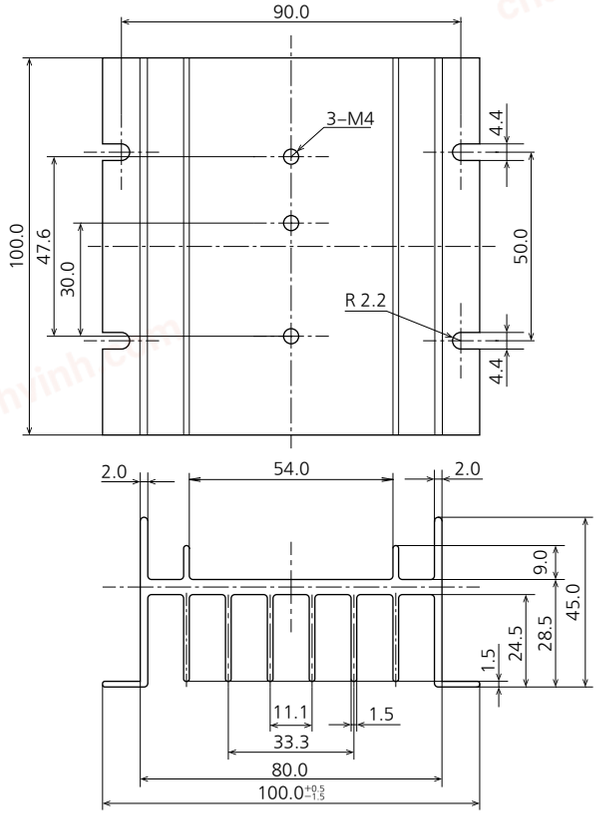

Mounting hole pattern

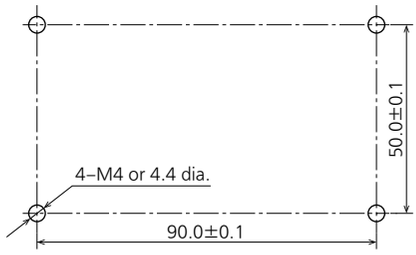

General tolerance: ±1.0

©Panasonic Corporation 2022

chanhvinh.com

■ Standard heat sink (AQP814)

CAD



External dimensions

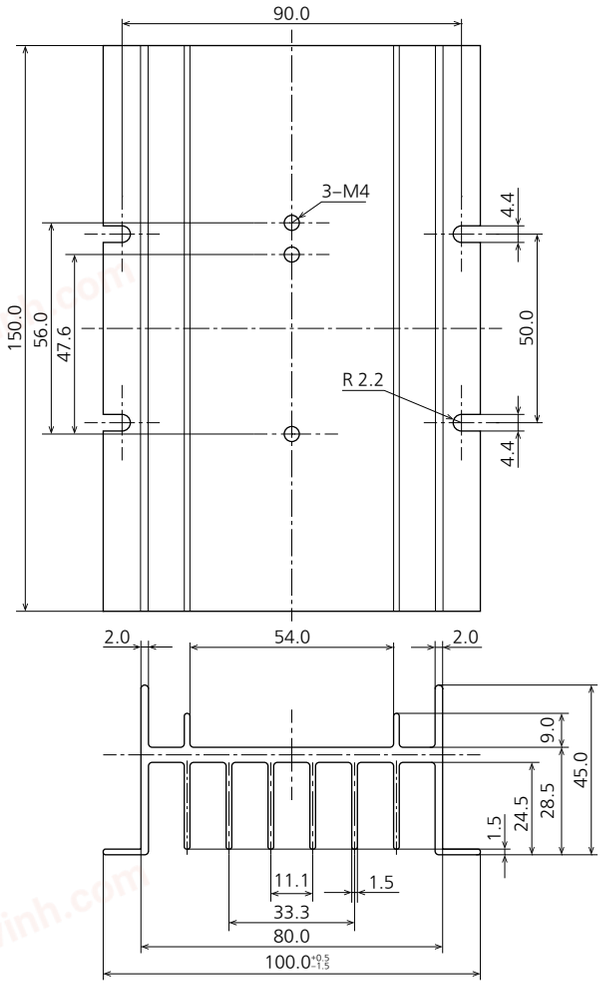

Mounting hole pattern

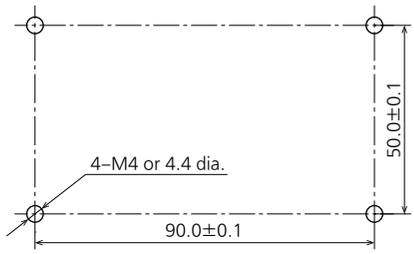

General tolerance: ±1.0

©Panasonic Corporation 2022

chanhvinh.com

Solid State Relays AQ-A RELAYS (AC output type)

■ Standard heat sink (AQP815)

CAD

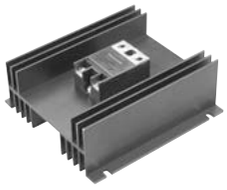

External dimensions

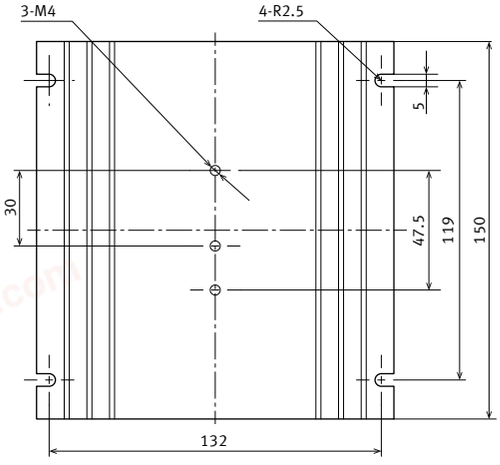

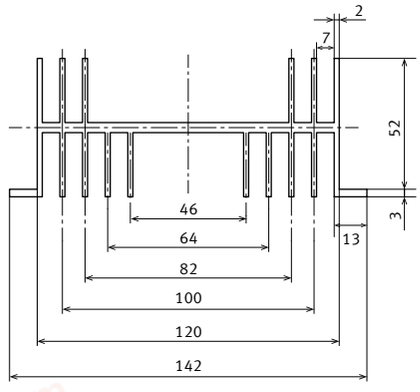

Mounting hole pattern

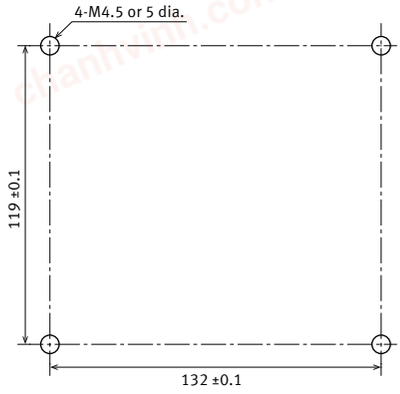

General tolerance: ±1.0

■ DIN rail mounting plate (AQP809)

CAD



External dimensions

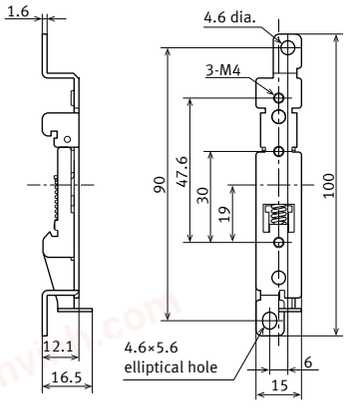

General tolerance: ±1.0



©Panasonic Corporation 2022

chanhvinh.com

■ Mounting rail (ATA48011)

CAD



External dimensions

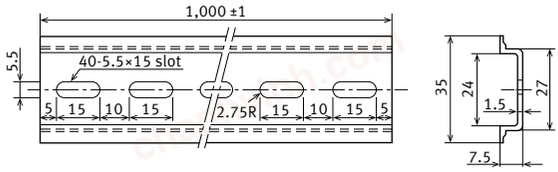

■ Fastening plate (ATA4806)

CAD



External dimensions

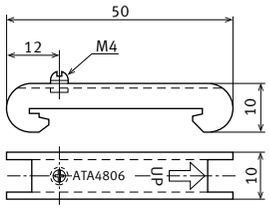

■ Terminal cover (AQA801)

CAD



External dimensions

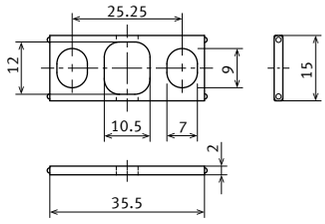

Use this product as a protective terminal cover for AQ-A/SSR. It can be used for either the input or output side.

General tolerance: ±1.0

SCHEMATIC AND WIRING DIAGRAMS

Schematic	Output configuration	Load	Wiring diagram
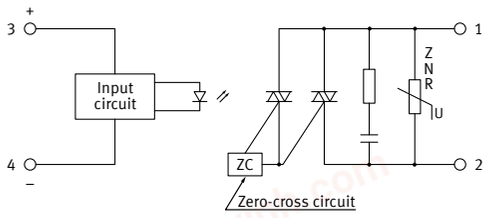 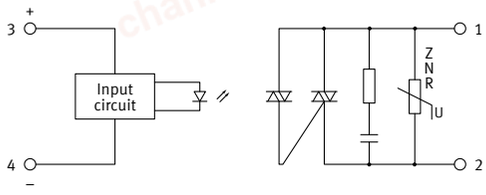	1 Form A	AC	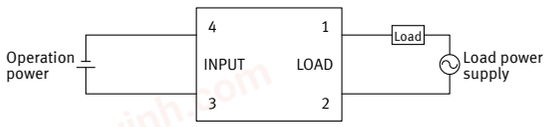

SAFETY STANDARDS

Type			UL (Recognized)		CSA (Certified)		VDE (Certified)		Remarks
			File No. (Standard No.)	Contact rating	File No. (Standard No.)	Contact rating	File No. (Standard No.)	Contact rating (Reinforced insulation)	
AQ–A (AC output type)	AC output	15 A type	E43149 (UL508, UL60950–1)	15 A 264 V AC	(Certified by C–UL)		Nr. 40031857 (EN62368–1)	15 A 250 V AC	
		25 A type		25 A 264 V AC				25 A 250 V AC	
		40 A type		40 A 264 V AC				40 A 250 V AC	

Note: For the latest information on compliance with safety standards, please refer to our website.

Please refer to **"the latest product specifications"** when designing your product.
• Requests to customers:
https://industrial.panasonic.com/ac/e/salespolicies/

©Panasonic Corporation 2022

chanhvinh.com

Cautions for Use of Solid State Relays

⚠ SAFETY WARNINGS

- Do not use the product under conditions that exceed the range of its specifications. It may cause overheating, smoke, or fire.
- Do not touch the recharging unit while the power is on. There is a danger of electrical shock.
  Be sure to turn off the power when performing mounting, maintenance, or repair operations on the relay (including connecting parts such as the terminal board and socket).
- Check the connection diagrams in the catalog and be sure to connect the terminals correctly. If the device is energized with short circuit or any wrong connection, it may cause unexpected malfunction, abnormal heat or fire.

Cautions for Use of Solid State Relays

■Derating design

Derating is a significant factor for reliable design and product life. Even if the conditions of use (temperature, current, voltage, etc.) of the product are within the absolute maximum ratings, reliability may be lowered remarkably when continuously used in high load conditions (high temperature, high humidity, high current, high voltage, etc.) Therefore, please derate sufficiently below the absolute maximum ratings and evaluate the device in the actual condition.

Moreover, regardless of the application, if malfunctioning can be expected to pose high risk to human life or to property, or if products are used in equipment otherwise requiring high operational safety, in addition to designing double circuits, that is, incorporating features such as a protection circuit or a redundant circuit, safety testing should also be carried out.

■Applying stress that exceeds the absolute maximum rating

If the voltage or current value for any of the terminals exceeds the absolute maximum rating, internal elements will deteriorate because of the overvoltage or overcurrent. In extreme cases, wiring may melt, or silicon P/N junctions may be destroyed.

Therefore, the circuit should be designed in such a way that the load never exceed the absolute maximum ratings, even momentarily.

■Phototriac coupler

The phototriac coupler is designed solely to drive a triac. As a condition, the triac must be powered beforehand.

■Unused terminals

1) Phototriac coupler
   The No. 3 terminal is used with the circuit inside the device. Therefore, do not connect it to the external circuitry. (6 pins)
2) AQ-H
   The No. 5 terminal is connected to the gate.
   Do not directly connect No. 5 and 6 terminals.

■Short across terminals

Do not short circuit between terminals when device is energized, since there is possibility of breaking of the internal IC.

■When used for the load less than rated

An SSR may malfunction if it is used below the specified load. In such an event, use a dummy resistor in parallel with the load.

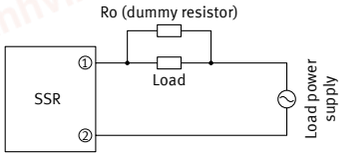

Load Specifications

Type	Load current
AQ-G All models	20 mA
AQ1 All models	50 mA
AQ8 All models	50 mA
AQ-J All models	50 mA
AQ-A (AC output type)	100 mA

■Noise and surge protection at the input side

1) Phototriac coupler and AQ-H

If reverse surge voltages are present at the input terminals, connect a diode in reverse parallel across the input terminals and keep the reverse voltages below the reverse breakdown voltage. Typical circuits are below shown.

< Phototriac coupler (6-pin)>

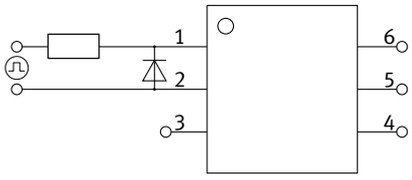

2) SSR

A high noise surge voltage applied to the SSR input circuit can cause malfunction or permanent damage to the device. If such a high surge is anticipated, use C or R noise absorber in the input circuit.

Typical circuits are below shown

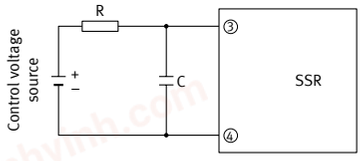

■Recommended input current of Phototriac coupler and AQ-H

Design in accordance with the recommended operating conditions for each product.

Since these conditions are affected by the operating environment, ensure conformance with all relevant specifications.

■Ripple in the input power supply

If ripple is present in the input power supply, observe the following:

1) Current-sensitive type (Phototriac Coupler, AQ-H)

(1) For LED forward current at Emin, please maintain the value mentioned at “Recommended input current.”
(2) Please make sure the LED forward current for Emax. is no higher than 50 mA.

2) Voltage-sensitive type (AQ-G, AQ1, AQ8, AQ-J, AQ-A)

(1) The Emin. should exceed the minimum rated control voltage
(2) The Emax. should not exceed the maximum rated control voltage

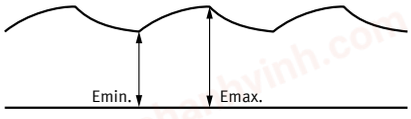

■When the input terminals are connected with reverse polarity

Product name	If the polarity of the input control voltage is reversed
AQ1, AQ-J, AQ-A (AC)	Reversing the polarity will not cause damage to the device, due to the presence of a protection diode, but the device will not operate.
AQ-H, AQ-G, AQ8, AQ-A (DC)	Reversing the polarity may cause permanent damage to the device. Take special care to avoid polarity reversal or use a protection diode in the input circuit.

©Panasonic Corporation 2022

chanhvinh.com

Cautions for Use of Solid State Relays

■ Noise and surge protection at the output side

1) Phototriac coupler and AQ-H

The figure below shows an ordinary triac drive circuit. Please add a snubber circuit or varistor, as noise/surge on the load side could damage the unit or cause malfunctions.

Typical circuits are shown below.

<Phototriac coupler SOP4 and DIP4 types>

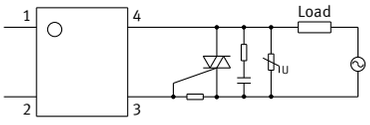

<Phototriac coupler DIP6 type>

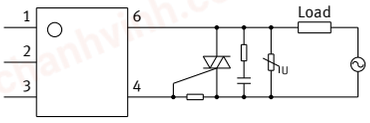

<AQ-H>

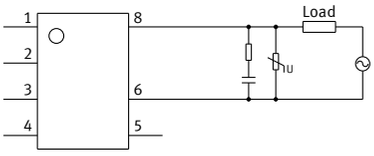

Note: Connection of an external resister, etc., to terminal No. 5 (gate) is not necessary.

2) SSR

(1) AC output type

A high noise surge voltage applied to the SSR load circuit can cause malfunction or permanent damage to the device. If such a high surge is anticipated, use a varistor across the SSR output.

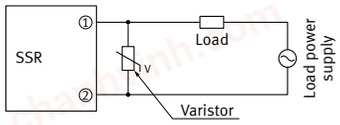

(2) DC output type

If an inductive load generates spike voltages which exceed the absolute maximum rating, the spike voltage must be limited.

Typical circuits are shown below.

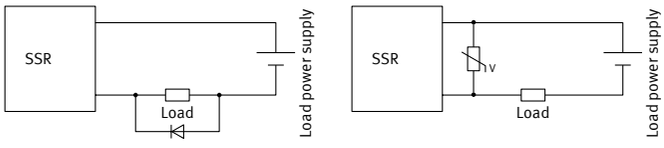

3) Clamp diode and snubber circuit can limit spike voltages at the load side. However, long wires may cause spike voltages due to inductance. It is recommended to keep wires as short as possible to minimize inductance.

4) Output terminals may become conductive although the input power is not applied, when a sudden voltage rise is applied to it even when the relay is off. This may occur even if voltage rise between terminals is less than the repetitive peak OFF-state voltage. Therefore, please perform sufficient tests with actual conditions.

5) When controlling loads in which the voltage and current phases differ, a sudden voltage rise is applied during turn-off, and the triac sometimes does not turn off. Please conduct sufficient tests using actual equipment.

6) When controlling loads using zero-cross voltage types in which the voltage and current phases differ, the triac sometimes does not turn on regardless of the input state, so please conduct sufficient tests using actual equipment.

■ Cleaning (for PC board mounting type)

Cleaning the solder flux should use the immersion washing with an organic solvent. If you have to use ultrasonic cleaning, please adopt the following conditions and check that there are no problems in the actual usage.

- Frequency : 27 to 29kHz
- Ultrasonic output: No greater than 0.25W/cm² (Note)
- Cleaning time : 30s or less
- Others : Float PC board and the device in the cleaning solvent to prevent from contacting the ultrasonic vibrator.

Note: Applies to unit area ultrasonic output for ultrasonic baths

■ Notes for mounting (for PC board mounting type)

1) When different kinds of packages are mounted on PC board, temperature rise at soldering lead is highly dependent on package size. Therefore, please set the lower temperature soldering condition than the conditions of item "14. Soldering", and confirm the temperature condition of actual usage before soldering.

2) When mounting condition exceeds our recommendation, the device characteristics may be adversely affected. It may occur package crack or bonding wire breaking because of thermal expansion unconformity and resin strength reduction. Please contact our sales office about the propriety of the condition.

3) Please confirm the heat stress by using actual board because it may be changed by board condition or manufacturing process condition

4) Solder creepage, wettability, or soldering strength will be affected by the mounting condition or used soldering type. Please check them under the actual production condition in detail.

5) Please apply coating when the device returns to a room temperature.

©Panasonic Corporation 2022

chanhvinh.com

■Soldering

1) When soldering surface-mount terminals, the following conditions are recommended.

(1) IR (Infrared reflow) soldering method

(Recommended condition reflow: Max. 2 times, measurement point: soldering lead)

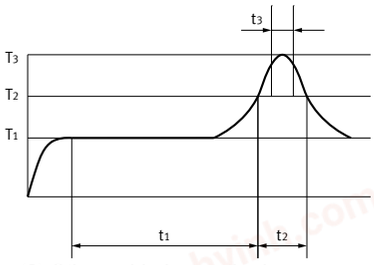

T1 = 150 to 180°C
T2 = 230°C
T3 = 240 to 250°C
t1 = 60 to 120 s
t2 = Within 30 s
t3 = Within 10 s

(2) Other soldering methods

Other soldering methods (VPS, hot-air, hot plate, laser heating, pulse heater, etc.) affect the relay characteristics differently, please evaluate the device under the actual usage.

(3) Soldering iron method

Tip temperature: 350 to 400 °C
Wattage : 30 to 60 W
Soldering time : within 3 s

2) When soldering standard PC board terminals, the following conditions are recommended.

(1) DWS soldering method

(Recommended condition number of times: Max. 1 time, measurement point: soldering lead *1)

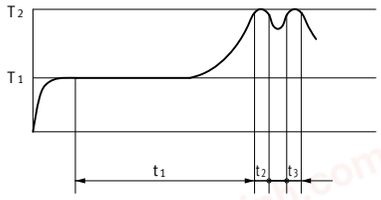

T_1 = 120°C
T_2 = Max. 260°C
t_1 = within 60 s
t_2+t_3 = within 5 s

*1 Solder temperature: Max. 260 °C

(2) Other dip soldering method (recommended condition: 1 time)

Preheating: Max. 120 °C, within 120 s,
measurement point:
soldering lead Soldering: Max. 260 °C, within 5 s*,
measurement area: soldering temperature

*Phototriac coupler and AQ-H: within 10 s

(3) Manual soldering method

Tip temperature: 350 to 400°C
Wattage: 30 to 60 W
Soldering time: within 3 s

●We recommend one with an alloy composition of Sn3.0Ag0.5Cu.

■Others

1) If an SSR is used in close proximity to another SSR or heat-generating device, its ambient temperature may exceed the allowable level. Carefully plan SSR layout and ventilation.

2) Terminal connections should be made by referring to the associated wiring diagram.

3) For higher reliability, check device quality under actual operating conditions.

4) To prevent the danger of electrocution, turn off the power supply when performing maintenance. Although AQ-A (DC output type) is constructed with insulation for the input/output terminals and the rear aluminum plate, the insulation between the input/output and the rear aluminum plate is not UL approved.

■Transportation and storage

1) Extreme vibration during transport may deform the lead or damage the device characteristics. Please handle the outer and inner boxes with care.

2) Inadequate storage condition may degrade soldering, appearance, and characteristics. The following storage conditions are recommended:

- Temperature: 0 to 45 °C
- Humidity: Max. 70%RH
- Atmosphere: No harmful gasses such as sulfurous acid gas, minimal dust.

3) Storage of Phototriac coupler (SOP type)

In case the heat stress of soldering is applied to the device which absorbs moisture inside of its package, the evaporation of the moisture increases the pressure inside the package and it may cause the package blister or crack. This device is sensitive to moisture and it is packed in the sealed moisture-proof package. Please make sure the following condition after unsealing.

●Please use the device immediately after unsealing.
(Within 30 days at 0 to 45 °C and Max. 70%RH)

●If the device will be kept for a long time after unsealing, please store in the another moisture-proof package containing silica gel. (Please use within 90 days.)

■Water condensation

Water condensation occurs when the ambient temperature changes suddenly from a high temperature to low temperature at high humidity, or the device is suddenly transferred from a low ambient temperature to a high temperature and humidity. Condensation causes the failures such as insulation deterioration. Panasonic Corporation does not guarantee the failures caused by water condensation.

The heat conduction by the equipment the SSR is mounted may accelerate the water condensation. Please confirm that there is no condensation in the worst condition of the actual usage. (Special attention should be paid when high temperature heating parts are close to the SSR.)

©Panasonic Corporation 2022

chanhvinh.com

Cautions for Use of Solid State Relays

■ The following shows the packaging format

1) Tape and reel (Phototriac coupler)

Type	Tape dimensions (Unit: mm)	Dimensions of paper tape reel (Unit: mm)
SO package 4-pin type	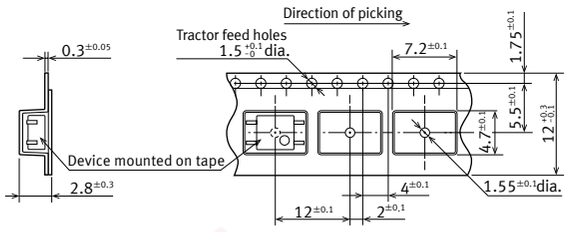 (1) When picked from 1/2-pin side: Part No. APT****SX (Shown above) (2) When picked from 3/4-pin side: Part No. APT****SZ	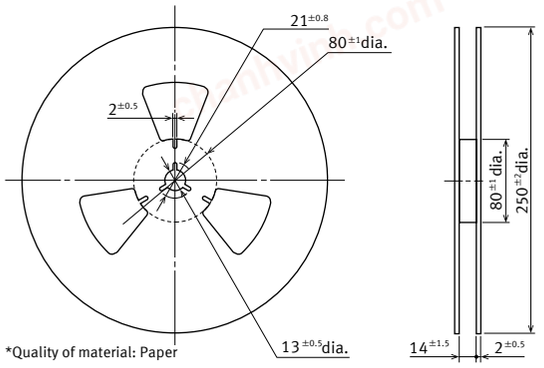
DIP 4-pin type	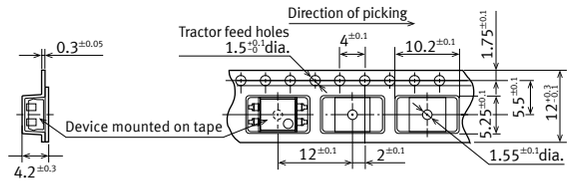 (1) When picked from 1/2-pin side: Part No. APT****AX (2) When picked from 3/4-pin side: Part No. APT****AZ	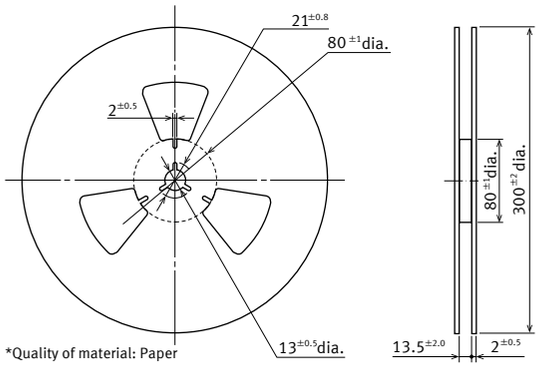
DIP 6-pin type	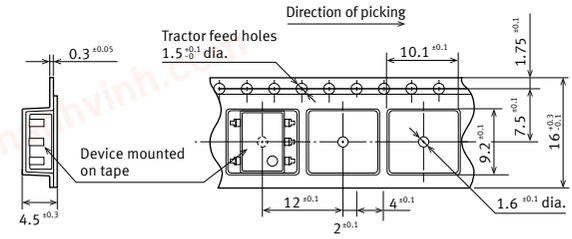 (1) When picked from 1/2/3-pin side: Part No. APT****AX (2) When picked from 4/5/6-pin side: Part No. APT****AZ	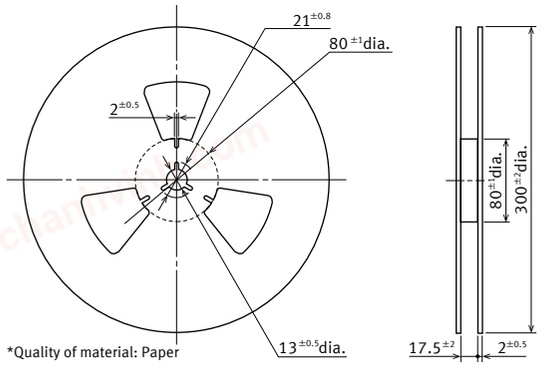
DIP 6-pin wide terminal type	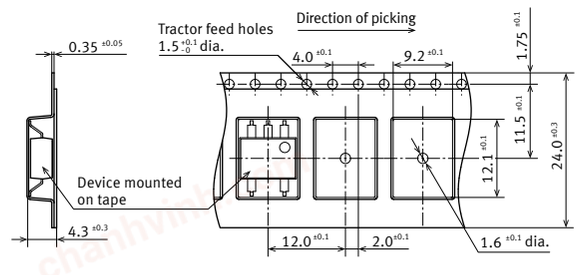 (1) When picked from 1/6-pin side: Part No. APT****WAY (2) When picked from 3/4-pin side: Part No. APT****WAW	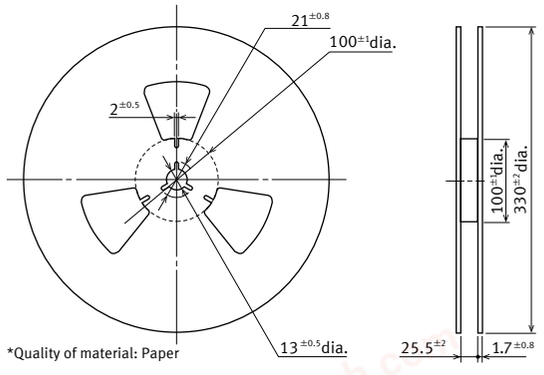

©Panasonic Corporation 2022

chanhvinh.com

2) Tape and reel (AQ-H)

Type	Tape dimensions (Unit: mm)	Dimensions of paper tape reel (Unit: mm)
8-pin SMD type	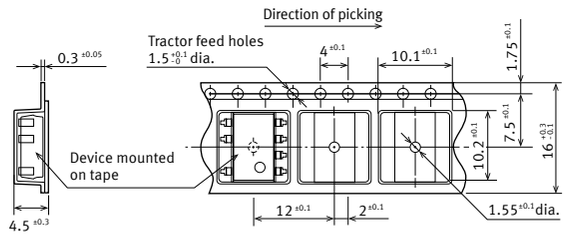 (1) When picked from 1/2/3/4-pin side: Part No. AQH****AX (Shown above) (2) When picked from 5/6/8-pin side: Part No. AQH****AZ	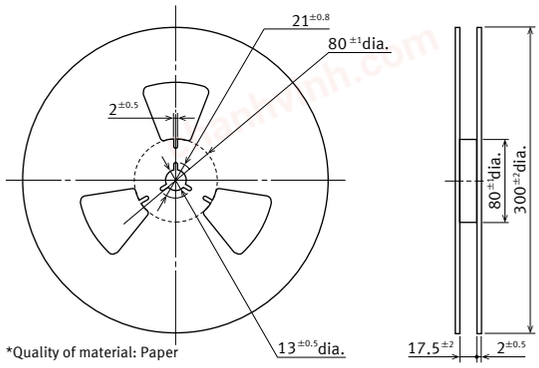

3) Tube

Phototriac coupler and AQ-H SSR are packaged in a tube as pin No. 1 is on the stopper B side. Observe correct orientation when mounting them on PC boards.

<Phototriac coupler SOP type>

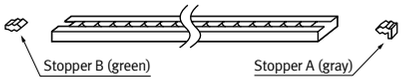

<Phototriac coupler DIP type and AQ-H SSR>

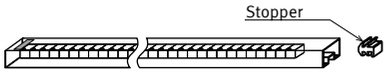

©Panasonic Corporation 2022

chanhvinh.com

Cautions for Use of Solid State Relays

Snubber Circuit

■ Reduce dv/dt

An SSR used with an inductive load can accidentally fire due to a high load voltage rise rate (dv/dt), even though the load voltage is below the allowable level (inductive load firing).

Our SSRs contain a snubber circuit designed to reduce dv/dt (except AQ-H).

■ Selecting the snubber constants

1) C selection

The charging coefficient tau for C of the SSR circuit is shown in formula ①

$$\tau = (R_L + R) \times C \text{ ----------①}$$

By setting formula ① so that it is below dv/dt value you have:

$C = 0.632V_A/[(dv/dt)\ (R_L+R)]$ -----②

By setting C = 0.1 to 0.2 μF, dv/dt can be controlled to between nV/μs and n+V/μs or lower. For the condenser, use either an MP condenser metallized polyester film. For the 100 V line, use a voltage between 250 and 400 V, and for the 200 V line, use a voltage between 400 and 600 V.

2) R selection

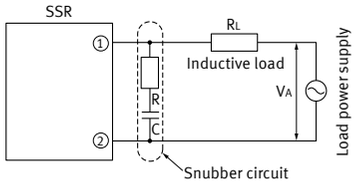

If there is no resistance R (the resistance R controls the discharge current from condenser C), at turn-on of the SSR, there will be a sharp rise in dv/dt and the high peak value discharge current will begin to flow.

This may cause damage to the internal elements of the SSR. Therefore, it is always necessary to insert a resistance R. In normal applications, for the 100 V line, have R = 10 to 100 Ω and for the 200 V line, have R = 20 to 100 Ω. (The allowable discharge current at turn on will differ depending on the internal elements of the SSR.) The power loss from R, written as P, caused by the discharge current and charging current from C, is shown in formula ③ below. For the 100 V line, use a power of 1/2 W, and for the 200 V line, use a power above 2 W.

$$P = \frac{C \times V_A^2 \times f}{2} \cdots\cdots ③$$

f = Power supply frequency

Also, at turn-off of the SSR, a ringing circuit is formed with the capacitor C and the circuit inductance L, and a spike voltage is generated at both terminals of the SSR. The resistance R serves as a control resistance to prevent this ringing. Moreover, a good non-inductive resistance for R is required. Carbon film resistors or metal film resistors are often used.

For general applications, the recommended values are C = 0.1 μF and R = 20 to 100 Ω. There are cases of resonance in the inductive load, so the appropriate care must be taken when making your selections.

Thermal Design

SSRs used in high-reliability equipment require careful thermal design. In particular, junction temperature control has a significant effect on device function and life time. The rated load current for PC board-mounting SSRs is defined as the maximum current allowable at an ambient temperature of 40 °C (30 °C) and under natural cooling. If the ambient temperature exceeds the SSRs derating temperature point [40 °C (30 °C)], load current derating in accordance with the load current vs temperature diagram becomes necessary. If adjacent devices act as heat sources, the SSR should be located more than 10 mm away from those devices.

SSRs with a 5 A rating or more must be used with the dedicated heat sinks listed in Table 1 or equivalents. To ensure adequate thermal conduction, apply thermal conductive compound (Ex. Momentive Performance Materials Inc. YG6111 or TSK5303) to the SSR's mounting surface. For information on external heat sinks for our SSRs and their mounting method, refer to "Data and Cautions for Use for respective relay".

Table 1 Dedicated on-board heat sinks

Type	Heat sink	Load current
AQ10A2-ZT4/32VDC	AQ1802	10A
AQ-J (10A)	AQP810*	10A
	AQP813	
	AQP812*	
AQ-J (15A)	AQP810*	15A
	AQP813	
	AQP812*	
AQ-J (25A)	AQP810*	20A
	AQP813	
	AQP812*	
	AQP815	25A
AQ-A (15A)	AQP813	15A
	AQP812*	
AQ-A (25A)	AQP814	25A
	AQP813	
	AQP812*	
AQ-A (40A)	AQP813	30A
	AQP812*	
	AQP814	40A
	AQP815	
AQ-A DC (10A)	AQP812*	8A
	AQP815	10A
AQ-A DC (30A)	AQP812*	30A

* It is possible to mounting on the DIN rail

©Panasonic Corporation 2022

chanhvinh.com

Protection Circuit

High-reliability SSR circuits require an adequate protection circuit, as well as careful study of the characteristics and maximum ratings of the device.

■Over-Voltage Protection

The SSR load power supply requires adequate protection against over-voltage errors from various causes. The methods of over-voltage protection include the following:

1) Use devices with a guaranteed reverse surge withstand voltage

(controlled avalanche devices, etc.)

2) Suppress transient spikes

Use a switching device in the secondary circuit of a transformer or use a switch with a slow opening speed.

3) Use a surge absorption circuit

Use a CR surge absorber or varistor across the load power supply or SSR.

Special care must be taken so power on/off surges or external surges do not exceed the device's rated load voltage. If a surge voltage exceeding the device's rated voltage is anticipated, use a surge absorption device and circuit (e.g. a ZNR from Panasonic Corporation).

Choosing the rated voltage of the ZNR

(1) Peak supply voltage
(2) Supply voltage variation
(3) Degradation of ZNR characteristic (1 mA ±10%)
(4) Tolerance of rated voltage (±10%)

For application to 100 V AC lines, choose a ZNR with the following rated voltage:

(1) × (2) × (3) × (4) = (100 × √2) × 1.1 × 1.1 × 1.1 = 188 (V)

Example of ZNR (Panasonic)

Types	Varistor voltage	Max. allowable circuit voltage		Max. control voltage	Max. average pulse electric power	Withstanding energy		Withstanding surge current		Electrostatic capacitance (Reference)
						(10/1000μs)	(2ms)	1time	(8/20μs) 2time	
	V1mA (V)	ACrms (V)	DC (V)	V50A (V)	(W)	(J)	(J)	(A)	(A)	@1KHz (pF)
ERZV14D201	200 (185 to 225)	130	170	340	0.6	70	50	6,000	5,000	770
ERZV14D221	220 (198 to 242)	140	180	360	0.6	78	55	6,000	5,000	740
ERZV14D241	240 (216 to 264)	150	200	395	0.6	84	60	6,000	5,000	700
ERZV14D271	270 (247 to 303)	175	225	455	0.6	99	70	6,000	5,000	640
ERZV14D361	360 (324 to 396)	230	300	595	0.6	130	90	6,000	4,500	540
ERZV14D391	390 (351 to 429)	250	320	650	0.6	140	100	6,000	4,500	500
ERZV14D431	430 (387 to 473)	275	350	710	0.6	155	110	6,000	4,500	450
ERZV14D471	470 (423 to 517)	300	385	775	0.6	175	125	6,000	4,500	400
ERZV14D621	620 (558 to 682)	385	505	1,025	0.6	190	136	5,000	4,500	330
ERZV14D681	680 (612 to 748)	420	560	1,120	0.6	190	136	5,000	4,500	320

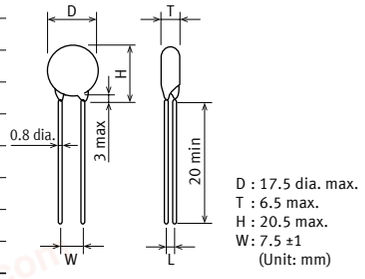

■Over-Current Protection

An SSR circuit operated without overcurrent protection may result in damage to the device. Design the circuit so the device's rated junction temperature is not exceeded for a continuous overload current.
(e.g. Surge current into a motor or light bulb)
The surge-on current rating applies to over-current errors which occur less than several tens of times during the service life of a semiconductor device. A protection coordination device is required for this rating.
Methods of over-current protection include the following:

1) Suppressing over-currents
Use a current limiting reactor in series with the load power supply.
2) Use a current shut-off device
Use a current limiting fuse or circuit breaker in series with the load power supply.

Example of executing fuse selection of over-current protection cooperation

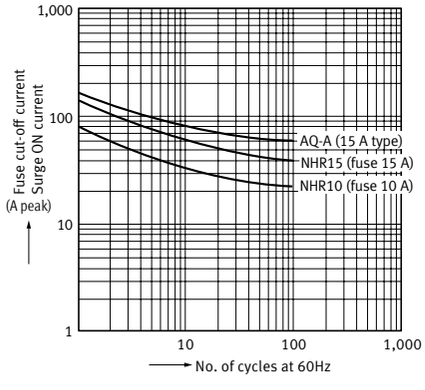

©Panasonic Corporation 2022

chanhvinh.com

Cautions for Use of Solid State Relays

Load Type Description

■Heaters (Resistive load)

The SSR is best suited to resistive loads. Noise levels can be drastically lowered with zero-crossing switching.

■Lamps

Tungsten or halogen lamps draw a high inrush current when turned on (approximately 7 to 8 times the steady state current for zero-crossing SSRs; approximately 9 to 12 times, in the worst case, for random type SSRs). Choose an SSR so the peak of the inrush current does not exceed 50% of the SSR surgeon current.

■Motors load

When starting, an electric motor draws a symmetrical AC starting current some 5 to 8 times the steady-state load current, superimposed on a DC current. The starting time during which this high starting current is sustained depends on the capacities of the load and load power supply. Measure the starting current and time under the motor's actual operating conditions and choose an SSR so the peak of the starting current does not exceed 50% of the SSR surge-on current.

When the motor load is deactivated, a voltage exceeding the load supply voltage is applied to the SSR due to counter-EMF.

This voltage is approximately 1.3 times the load supply voltage for induction motors, and approximately 2 times that for synchronous motors.

●Reversible motor control

When the direction of motor rotation is reversed, the transient current and time required for the reversal far exceed those required for simple starting. The reversing current and time should also be measured under actual operating conditions.

For a capacitor-starting, single-phase induction motor, a capacitive discharge current appears during the reversal process. Be sure to use a current limiting resistor or reactor in series with the SSR.

Also, the SSR should have a high marginal voltage rating, since a voltage twice as high as the load supply voltage develops across the SSR in the reversal process.

For reversible motor control, carefully design the driver circuit so the forward and reverse SSRs do not turn on at the same time.

■Solenoids

AC-driven solenoid contactors or solenoid valves also draw inrush current when they are activated. Choose an SSR such that the peak of the inrush current does not exceed 50% of the SSR surgeon current. For small solenoid valves and AC relays in particular, a leakage current may cause the load to malfunction after the SSR turns off. In such an event, use a dummy resistor in parallel with the load.

●Using an SSR below the specified load

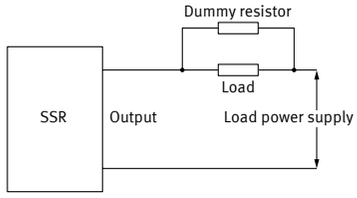

■Capacitive load

A capacitive load (switching regulator, etc.) draws an inrush current to charge the load capacitor when the SSR turns on. Choose an SSR so the peak of the inrush current does not exceed 50% of the SSR surge-on current. A timing error of up to one cycle can occur when a switch used in series with the SSR is opened or closed. If this is a problem, use an inductor (200 to 500 μH) in series to the SSR to suppress dv/dt error.

■Other electronic equipment

In general, electronic equipment uses line filters in the primary supply circuit.

The capacitors used in the line filters may cause the SSR to malfunction due to dv/dt turn on when the equipment is turned on or off. In such an event, use an inductor (200 to 500 μH) in series with the SSR to suppress dv/dt turn on.

©Panasonic Corporation 2022

chanhvinh.com

Load Inrush Current Wave and Time

(1) Incandescent Lamp Load

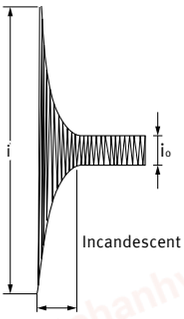

Approx. 1/3 second
Inrush current/rated current:
i/io≒10 to 15 times

(2) Mercury Lamp Load i/io≒3 times

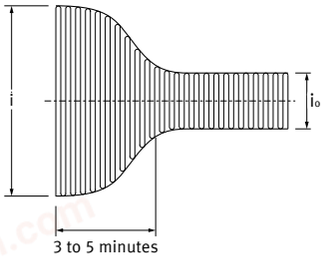

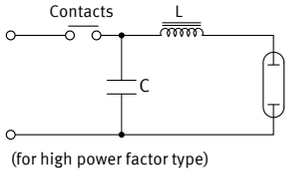

The discharge tube, transformer, choke coil, capacitor, etc., are combined in common discharge lamp circuits. Note that the inrush current may be 20 to 40 times, especially if the power supply impedance is low in the high power factor type.

(3) Fluorescent Lamp Load
i/io≒5 to 10 times

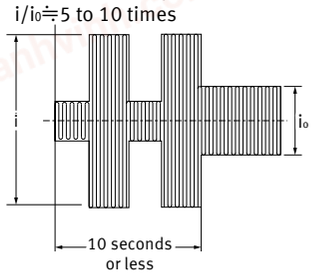

(4) Motor Load i/io≒5 to 10 times

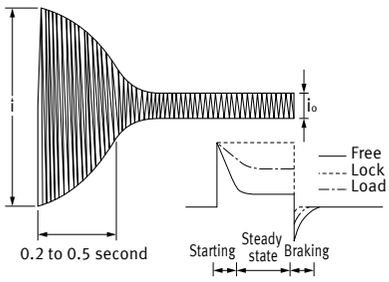

- Conditions become more harsh if plugging or inching is performed since state transitions are repeated.
- When using a relay to control a DC motor and brake, the on time inrush current, steady-state current and off time brake current differ depending on whether the load to the motor is free or locked. In particular, with non-polarized relays, when using from B contact of from contact for the DC motor brake, mechanical life might be affected by the brake current. Therefore, please verify current at the actual load.

(5) Solenoid Load
i/io≒10 to 20 times

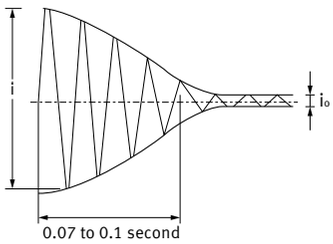

Note that since inductance is great, the arc lasts longer when power is cut. The contact may become easily worn.

(6) Electromagnetic Contact Load
i/io≒3 to 10 times

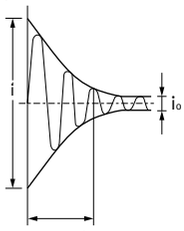

(7) Capacitive Load
i/io≒20 to 40 times

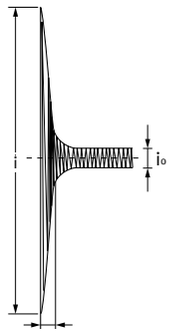

©Panasonic Corporation 2022

chanhvinh.com

Cautions for Use of Solid State Relays

SSR Driving Circuits

■Relay Driver

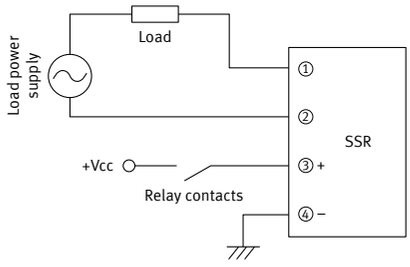

■NPN Transistor Driver

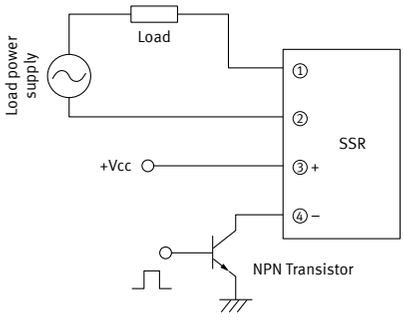

■PNP Transistor Driver

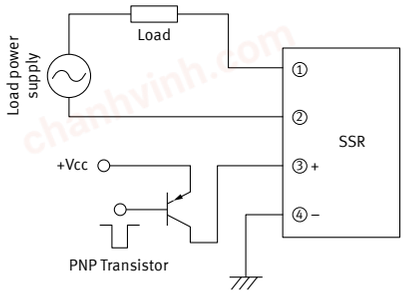

■TTL/DTL/IC Driver

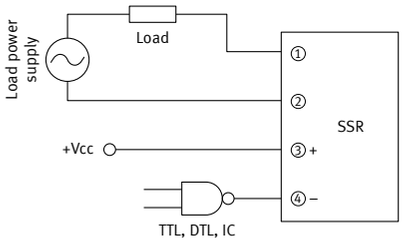

■C-MOS/IC Driver

(1) SSR fires when IC output is HIGH:

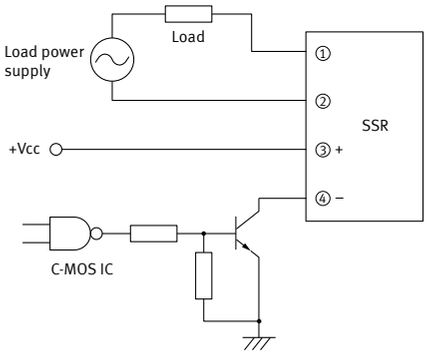

(2) SSR fires when IC output is LOW:

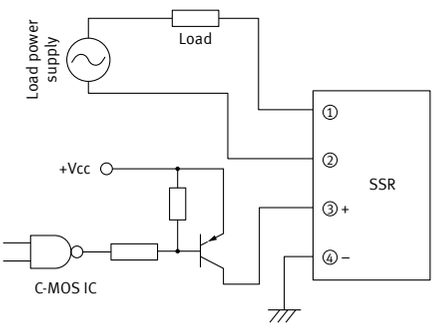

■Relay Driver

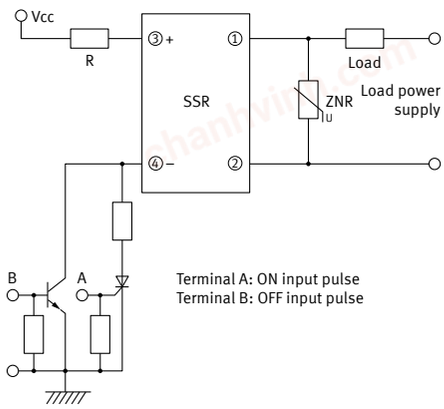

■NPN Transistor Driver

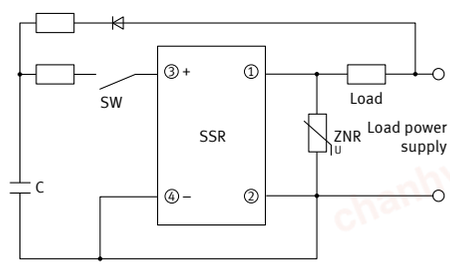

Phototriac Coupler, AQ-H Solid State Relay Driving Circuits

*Phototriac coupler and AQ-H is current driving type

■NPN Transistor Driver

(1) Phototriac Coupler

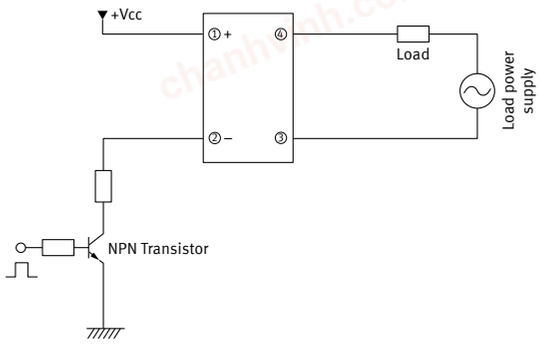

(2) AQ-H Solid State Relay

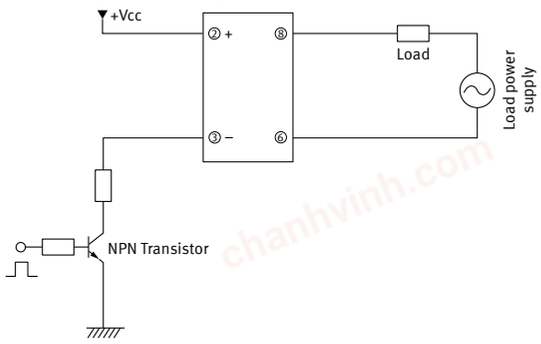

Please refer to **"the latest product specifications"** when designing your product.
•Requests to customers:
https://industrial.panasonic.com/ac/e/salespolicies/

©Panasonic Corporation 2022

chanhvinh.com

Please contact .....

Panasonic Corporation
Electromechanical Control Business Division
■1006, Oaza Kadoma, Kadoma-shi, Osaka 571-8506, Japan
industral.panasonic.com/ac/e/

Panasonic

©Panasonic Corporation 2022

Specifications are subject to change without notice.