chanhvinh.com

Panasonic INDUSTRY

Conductive Polymer Aluminum Solid Capacitors

Surface Mount Type

SXV series



OS-CON

Features

- Super high voltage (100 V max.)
- 125 ℃ 1000 h
- RoHS compliance, Halogen free

Specifications

Size code	E7	F8	E12	F12
Category temp. range	−55 ℃ to +125 ℃			
Rated voltage range	63 V to 100 V			
Nominal cap.range	6.8 μF to 18 μF	15 μF to 39 μF	15 μF to 39 μF	18 μF to 100 μF
Capacitance tolerance	±20 % (120 Hz / +20 ℃)			
DC leakage current	Please see the attached characteristics list			
Dissipation factor (tan δ)	Please see the attached characteristics list			
Endurance	+125 ℃ 1000 h, rated voltage applied			
	Capacitance change	Within ±20 % of the initial value		
	Dissipation factor (tanδ)	≦ 200 % of the initial limit		
	DC leakage current	Within the initial limit		
Damp heat (Steady state)	+60 ℃, 90 % to 95 % RH, 1000 h, No-applied voltage			
	Capacitance change	Within ±20 % of the initial value		
	Dissipation factor (tanδ)	≦ 150 % of the initial limit		
	DC leakage current	Within the initial limit (after voltage processing)		

Marking

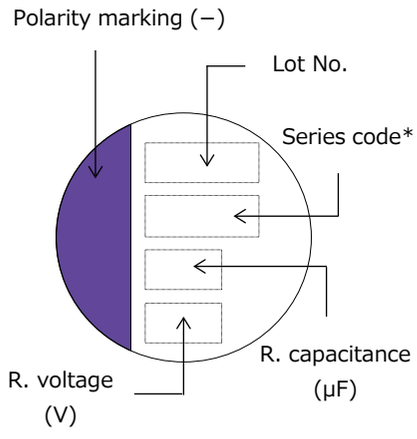

* Depends on the case size.

Dimensions (not to scale)

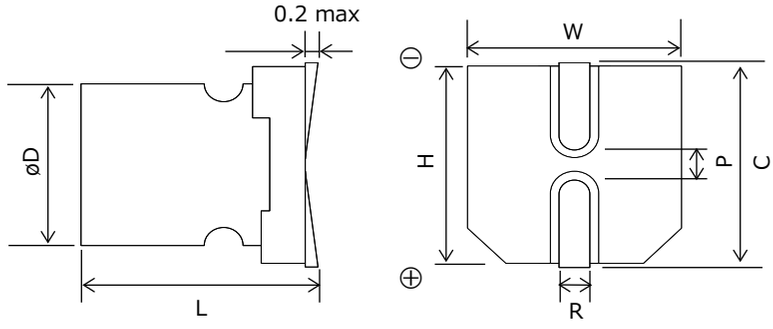

Unit : mm

Size code	øD±0.5	L +0.1 -0.4	W±0.2	H±0.2	C±0.2	R	P±0.2
E7	8.0	6.9	8.3	8.3	9.0	0.6 to 0.8	3.2
F8	10.0	7.9	10.3	10.3	11.0	0.6 to 0.8	4.6
E12	8.0	11.9	8.3	8.3	9.0	0.8 to 1.1	3.2
F12	10.0	12.6	10.3	10.3	11.0	0.8 to 1.1	4.6

Design and specifications are each subject to change without notice. Ask factory for the current technical specifications before purchase and/or use.
Should a safety concern arise regarding this product, please be sure to contact us immediately.

chanhvinh.com

Characteristics list

Rated voltage (V)	Rated capacitance (±20 %) (μF)	Case size (mm)		Size code	Specifications					Standard (Reel size : ø380)	
		øD	L		Ripple current*1 (mA rms)	Allowable ripple current*1 (mA rms)	ESR*2 (mΩ max.)	tan δ*3	LC*4 (μA)	Part number	Min. Packaging Q'ty (pcs)
63	18	8.0	6.9	E7	340	1100	60	0.12	56	63SXV18M	1000
	33	8.0	11.9	E12	930	2950	25	0.12	104	63SXV33M	400
	39	8.0	11.9	E12	930	2950	25	0.12	122	63SXV39M	400
		10.0	7.9	F8	690	2190	50	0.12	122	63SXV39MX	500
	56	8.0	11.9	E12	930	2950	25	0.12	176	63SXV56M	400
	68	10.0	12.6	F12	1030	3280	25	0.12	214	63SXV68M	400
	100	10.0	12.6	F12	1030	3280	25	0.12	315	63SXV100M	400
80	12	8.0	6.9	E7	340	1100	60	0.12	48	80SXV12M	1000
	27	8.0	11.9	E12	780	2490	35	0.12	108	80SXV27M	400
		10.0	7.9	F8	660	2080	55	0.12	108	80SXV27MX	500
	33	8.0	11.9	E12	780	2490	35	0.12	132	80SXV33M	400
	47	10.0	12.6	F12	980	3100	28	0.12	188	80SXV47M	400
	56	10.0	12.6	F12	980	3100	28	0.12	224	80SXV56M	400
100	6.8	8.0	6.9	E7	340	1100	60	0.12	34	100SXV6R8M	1000
	15	10.0	7.9	F8	630	2000	60	0.12	75	100SXV15MX	500
		8.0	11.9	E12	730	2350	40	0.12	75	100SXV15M	400
	18	10.0	12.6	F12	940	3000	30	0.12	90	100SXV18M	400
		8.0	11.9	E12	730	2350	40	0.12	90	100SXV18MX	400
	22	10.0	12.6	F12	940	3000	30	0.12	110	100SXV22M	400
	27	10.0	12.6	F12	940	3000	30	0.12	135	100SXV27M	400

*1: Ripple current (100 kHz / +105 ℃ < Tx ≦ +125 ℃) /Allowable ripple current (100 kHz / Tx ≦ +105 ℃)
*2: ESR (100 kHz to 300 kHz / +20 ℃)
*3: tan δ (120 Hz / +20 ℃)
*4: After 2 minutes
◆ Please refer to each page in this catarog for “Reflow conditions” and “Taping specifications”.

Frequency correction factor for ripple current

Frequency(f)	120 Hz ≦ f < 1 kHz	1 kHz ≦ f < 10 kHz	10 kHz ≦ f < 100 kHz	100 kHz ≦ f < 500 kHz
Coefficient	0.05	0.3	0.7	1

chanhvinh.com

Panasonic INDUSTRY

Guidelines and precautions regarding the technical information and use of our products described in this online catalog.

- If you want to use our products described in this online catalog for applications requiring special qualities or reliability, or for applications where the failure or malfunction of the products may directly jeopardize human life or potentially cause personal injury (e.g. aircraft and aerospace equipment, traffic and transportation equipment, combustion equipment, medical equipment, accident prevention, anti-crime equipment, and/or safety equipment), it is necessary to verify whether the specifications of our products fit to such applications. Please ensure that you will ask and check with our inquiry desk as to whether the specifications of our products fit to such applications use before you use our products.
- The quality and performance of our products as described in this online catalog only apply to our products when used in isolation. Therefore, please ensure you evaluate and verify our products under the specific circumstances in which our products are assembled in your own products and in which our products will actually be used.
- If you use our products in equipment that requires a high degree of reliability, regardless of the application, it is recommended that you set up protection circuits and redundancy circuits in order to ensure safety of your equipment.
- The products and product specifications described in this online catalog are subject to change for improvement without prior notice. Therefore, please be sure to request and confirm the latest product specifications which explain the specifications of our products in detail, before you finalize the design of your applications, purchase, or use our products.
- The technical information in this online catalog provides examples of our products' typical operations and application circuits. We do not guarantee the non-infringement of third party's intellectual property rights and we do not grant any license, right, or interest in our intellectual property.
- If any of our products, product specifications and/or technical information in this online catalog is to be exported or provided to non-residents, the laws and regulations of the exporting country, especially with regard to security and export control, shall be observed.

<Regarding the Certificate of Compliance with the EU RoHS Directive/REACH Regulations>

- The switchover date for compliance with the RoHS Directive/REACH Regulations varies depending on the part number or series of our products.
- When you use the inventory of our products for which it is unclear whether those products are compliant with the RoHS Directive/REACH Regulation, please select "Sales Inquiry" in the website inquiry form and contact us.

We do not take any responsibility for the use of our products outside the scope of the specifications, descriptions, guidelines and precautions described in this online catalog.

chanhvinh.com

Notices

■ Applicable laws and regulations

・This product complies with the RoHS Directive (Restriction of the use of certain hazardous substances in electrical and electronic equipment (DIRECTIVE 2011/65/EU and (EU)2015/863)).
・No Ozone Depleting Chemicals(ODC's), controlled under the Montreal Protocol Agreement, are used in producing this product.
We do not use PBBs or PBDEs as brominated flame retardants.
・Export procedure which followed export related regulations, such as foreign exchange and a foreign trade method, on the occasion of export of this product.
・These products are not dangerous goods on the transportation as identified by UN(United Nations) numbers or UN classification.

■ Limited applications

・This capacitor is designed to be used for electronics circuits such as audio/visual equipment, home appliances, computers and other office equipment, optical equipment, measuring equipment.
・Prior to usage of this capacitor for applications requiring high reliability and safety and malfunction of capacitor might threaten human life or property, it is highly recommended to confirm the usage of this capacitors with Panasonic.

■ Intellectual property rights and licenses

・The technical information in this specification provides examples of our products' typical operations and application circuits. We do not guarantee the non-infringement of third party's intellectual property rights and we do not grant any license, right, or interest in our intellectual property.

Items to be observed

■ For specification

・This specification guarantees the quality and performance of the product as individual components.
The durability differs depending on the environment and the conditions of usage.
Before use, check and evaluate their compatibility with actual conditions when installed in the products.
When safety requirements cannot be satisfied in your technical examination, inform us immediately.
・Do not use the products beyond the specifications described in this document.

■ Upon application to products where safety is regarded as important

Install the following systems for a fail-safe design to ensure safety if these products are to be used in equipment where a defect in these products may cause the loss of human life or other signification damage, such as damage to vehicles (automobile, train, vessel), traffic lights, medical equipment, aerospace equipment, electric heating appliances, combustion/ gas equipment, rotating rotating equipment, and disaster/crime prevention equipment.

(1) The system is equipped with a protection circuit and protection device.
(2) The system is equipped with a redundant circuit or other system to prevent an unsafe status in the event of a single fault.

■ Conditions of use

・Before using the products, carefully check the effects on their quality and performance, and determined whether or not they can be used. These products are designed and manufactured for general-purpose and standard use in general electronic equipment. These products are not intended for use in the following special conditions.

(1) In liquid, such as Water, Oil, Chemicals, or Organic solvent.
(2) In direct sunlight, outdoors, or in dust.
(3) In vapor, such as dew condensation water of resistive element, or water leakage, salty air, or air with a high concentration corrosive gas, such as Cl_2, H_2S, NH_3, SO_2, or NOx.
(4) In an environment where strong static electricity or electromagnetic waves exist.
(5) Mounting or placing heat-generating components or inflammables, such as vinyl-coated wires, near these products.
(6) Sealing or coating of these products or a printed circuit board on which these products are mounted, with resin and other material.
(7) Using resolvent, water or water-soluble cleaner for flux cleaning agent after soldering. (In particular, when using water or a water-soluble cleaning agent, be careful not to leave water residues)
(8) Using in the atmosphere where strays acid or alkaline.
(9) Using in the atmosphere where there are excessive vibration and shock.
(10) Using in the atmosphere where there are low pressure or decompression.

・Please arrange circuit design for preventing impulse or transitional voltage.
Do not apply voltage, which exceeds the full rated voltage when the capacitors receive impulse voltage, instantaneous high voltage, high pulse voltage etc.
・Our products there is a product are using an electrolyte solution. Therefore, misuse can result in rapid deterioration of characteristics and functions of each product. Electrolyte leakage damages printed circuit and affects performance, characteristics, and functions of customer system.

chanhvinh.com

⚠ Guidelines and precautions（OS-CON）

1. Circuit design

1.1 Prohibited circuits

(1) Leakage current of the OS-CON may increase in the following conditions.
  (a) Soldering
  (b) When voltage is not applied : high temperature no-load test, high temperature and high humiditynoload test, rapidly changing temperature test, etc.

(2) Avoid the use of the OS-CON in the following type of circuits because leakage current may increase.
  (a) High-impedance circuits
  (b) Coupling circuits
  (c) Time constant circuits
  (d) Other circuits that are significantly affected by leakage current.
  ✻ If you plan to use 2 or more OS-CONs in a series connection, please contact us before use。

1.2 Failure and life-span

The failure rate is 0.5 % /1000 h (Confidence level : 60 %) based on JIS C 5003.
The prospective failure is not zero. The mainly failure modes are as follows.

1.2-1 Contingency failure

The most common failure mode is a short circuit. Mainly caused by the soldering or operating temperature environment, along with heat stresses, electrical stresses or mechanical stressesas follows.

・Applying voltage over the rated voltage.
・Applying reverse voltage
・Excessive mechanical stress
・Applying rush current by sudden charge or discharge out of the specification.

(1) The following phenomenon is seen when short-current is applied to the OS-CON.
  (a) When current is relatively low. (ø10 : approx 1 A or less, ø8 : approx 0.5 A or less, ø6.3 : approx 0.2 A or less)
  The OS-CON becomes heated, but no effects are visible even when the current is continously carried.
  (b) When the short circuit currents exceed the mentioned value above.
  After internal temperature increase, sealing rubber may be turned over.
  In some cases, odorous gas may be produced.

(2) In case a short circuit occurs, ensure safety by fully considering the followings.
  (a) If odorous gas is released, turn off the main power of the equipment.
  In this case, keep your face and hands away from the area.
  (b) Though it depends on the conditions, it takes seconds to minutes before odorant gas generates.
  Protective circuit should operate in this period.
  (c) If the gas comes into eyes, rinse immediately. If the gas is inhaled, gargle immediately.
  (d) Do not lick the electrolyte. If the electrolyte touches skin, wash it off with soap immediately.
  (e) The OS-CON contains combustible substances. In case a large current continues to flow after a short circuit, in the worst case, the shorted-out section may ignite. For safety, install a redundant circuit or a protective circuit, etc.

1.2-2 Wear-out failure (life time)

When lifetime span exceeded the specified guarantee time of endurance and damp heat, electrolyte might insulate and cause electric characteristic changed. This is called an open circuit.
The electric characteristics of capacitance and ESR may possibly change within the specified range in specifications even if it is used under the condition of the rated voltage, electric and mechanical performance. Please note it when designing.

1.3 Leakage current

Mechanical stress may cause OS-CON’s leakage current increased.
In such a case, leakage current will gradually decrease by applying voltage (withinthe category voltage and the upper limit of category temperature).

1.4 Rapid charge and discharge limitation

Allowance of a large rush current to flow due to rapid charge and discharge may result in short circuit or large leakage current. The protection circuit, to maintain high reliability, is recommended when rush current to flow to the OS-CON is in the following cases.

(1) Products which 10 times of allowable ripple current is less than 10 A : It is when 10 A or over of rush current is applied.
(2) Products which 10 times of allowable ripple current is 10 A or over : It is when rush current, which the figure is over 10 times of allowable ripple current, is applied.

chanhvinh.com

2. Mounting

2.1 Soldering with a soldering iron

(1) When lead terminals for radial lead type must be processed because the lead pitch and the PCB holes do not match, process them without any stresses to the OS-CON before soldering.
(2) Solder without any excessive stresses to the OS-CON itself.
(3) When the OS-CON has been soldered once and needs to be removed, remove it after the solder has been completely melted.
(4) Do not let the tip of the soldering iron touch the OS-CON itself.

2.2 Flow soldering

(1) Do not apply flow soldering to OS-CON SMD type.
(2) Do not solder the OS-CON itself by submerging it in melted solder.
(3) Solder the opposite side that the OS-CON is mounted on.
(4) Note that flux does not adhere to anywhere expect the lead terminal.
(5) Note that other components do not fall over and touch the OS-CON when soldering.

2.3 Reflow soldering

(1) Do not apply reflow soldering to OS-CON Radial Lead type.
(2) Please contact us for setting VPS conditions.

2.4 Capacitor handling after soldering

Do not subject the OS-CON to excessive stress as follows.
(1) Do not tilt, bend or twist the OS-CON.
(2) Do not move the PCB with holding the OS-CON itself.
(3) Do not hit the OS-CON with objects.
(4) When stacking PCBs, make sure that the OS-CON does not touch other PCBs or components.

2.5 Circuit board cleaning

Check the following items before washing PC board with these detergents: high quality alcohol-based cleaning fluid such as Pine-a ST-100S, clean thru 750H, 750L, 710M, 750K or Techno Care FRW 14 through 17 or detergents including substitute freon as AK-225AES or IPA.
(1) Use immersion or ultrasonic waves to clean within 2 minutes.
(2) The temperature of the cleaning fluid should be less than 60 °C.
(3) Watch the contamination of the detergent such as conductivity, pH, specific gravity, water content, etc.
(4) Do not store the OS-CON in a location subject to gases from the cleaning fluid or in an airtight container after cleaning.
(5) Dry the PCB or OS-CON with hot air that should be less than the upper category temperature.
(6) Please note that indication may disappear when rubbing print side after washing depending on a cleaner.
(7) Please contact us for details about detergents, cleaning methods and detergents other than those listed above.

2.6 Fixatives and coating materials

(1) Select the appropriate covering and sealant materials for the OS-CON. In particular, don’t use acetone in the fixative, coating agent and diluent.
(2) Before applying the fixative or coating, completely remove any flux residue and foreign matter from the area where the board and the OS-CON will be jointed together.
(3) Allow any detergent to dry before applying the fixative or coating.
(4) Please contact us for the fixative and coating heat curing conditions.

2.7 Capacitor insulation

Be sure to completely separate the case, negative lead terminal, positive lead terminal and PC board patterns with each other due to the following reasons.
(1) Insulation is not guaranteed at a part of resin on the surface of a case.
(2) It offers inconstant resistance between a case and a negative lead terminal and it isn’t insulated.

chanhvinh.com

3. Storage

Open the bags just before mounting and use up all products once opened,
For keeping a good solderability, store the OS-CON as follows.

		Before unsealing	After unsealing
SMD type*1		Within 24 months after shipment	Within 30 days from opening (packaged with carrier tape)
Radial lead type	Bag packing product	Within 30 months after shipment	Within 7 days from opening
	Taping product	Within 24 months after shipment	

*1 : The JEDEC J-STD-020 standard is not applicable

✻ Intellectual property right

We, Panasonic Group are providing the product and service that customers can use without anxiety, and are working positively on the protection of our products underintellectual property rights.

Representative patents relating to OS-CON are as follows:

US Patent No.7158367