chanhvinh.com

inventronics

OSRAM

product - technical datasheet

ELEMENT 60/220-240/24 G2

ELEMENT G2 24V | Constant Voltage – Non dimmable

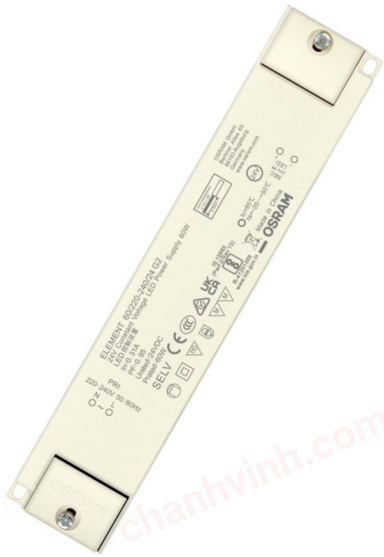

Product family features

- Linear form factor
- Power factor: >0.95 at full load
- Total Harmonic Distortion (THD): < 15%
- Output voltage tolerance: < 3%
- Up to 30,000 h @ T_c max / up to 50,000 h @ T_c -10 °C
- Lifetime: up to 30,000 h (temperature at max. t_c)

Product family benefits

- High efficiency up to 92%
- Higher quality of light thanks to < 3% output ripple current
- Excellent price/performance ratio
- Class II design for wide application
- 3 years guarantee

Specifications are subject to changes without notice.

© 2024, Inventronics GmbH. All rights reserved. Inventronics is a licensee of the OSRAM brand. OSRAM is a trademark of ams OSRAM

chanhvinh.com

Areas of application

- Decorative lighting in hospitality, restaurants and Shops
- Shelf lighting
- Cove lighting
- Under cabinet lighting

chanhvinh.com

chanhvinh.com

Technical data

Electrical data

Nominal input voltage	220…240 V
Mains frequency	50…60 Hz
Input voltage AC	198…264 V
Input voltage DC	not relevant
Total harmonic distortion	< 10 %
Power factor λ	0.95
Efficiency in full-load	88 % [1)]
Device power loss	8.2 W [2)]
Inrush current	< 25 A [3)]
Max. ECG no. on circuit breaker 10 A (B)	10
Max. ECG no. on circuit breaker 16 A (B)	15
Surge capability (L-N)	1 kV
Nominal output voltage	24 V
U-OUT (working voltage)	25 V
Nominal output power	60 W
Maximum output power	60 W [4)]
Galvanic isolation	SELV

1) at 230 V, 50 Hz
2) At Full load, 230 V, 50 Hz
3) At 340 µs
4) at steady state

chanhvinh.com

chanhvinh.com

Dimensions & weight

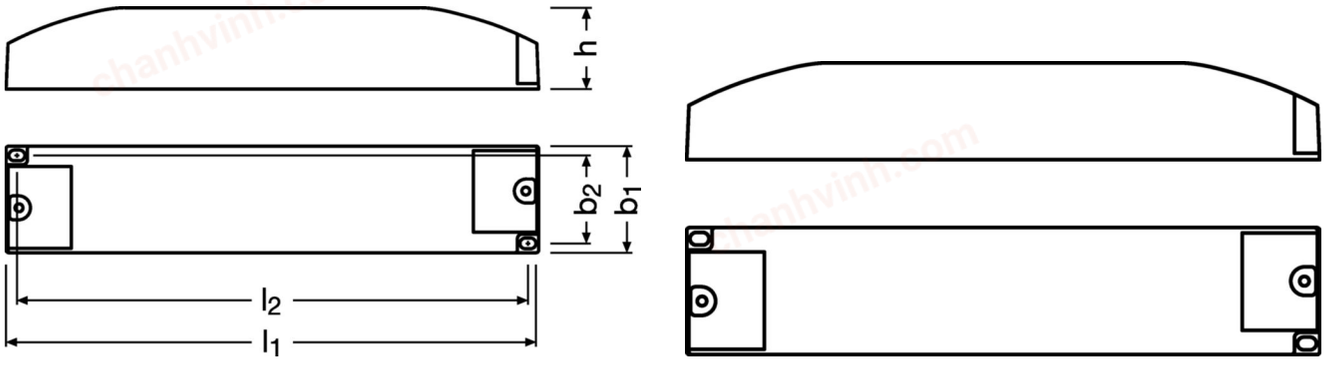

Length	200.0 mm
Width	40.0 mm
Height	31.0 mm
Mounting hole spacing, length	192 mm
Cable cross-section, input side	0.75…1.5 mm²
Cable cross-section, output side	0.75…1.5 mm²
Wire preparation length, input side	5.0 mm
Wire preparation length, output side	5.0 mm
Product weight	296.00 g

Colors & materials

Casing material	Plastic

Temperatures & operating conditions

Ambient temperature range	-20…+50 °C
Maximum temperature at tc test point	85 °C
Max.housing temperature in case of fault	110 °C
Temperature range at storage	-40…+85 °C
Permitted rel. humidity during operation	5…85 % [1)]

1) Non-condensing

Specifications are subject to changes without notice.

© 2024, Inventronics GmbH. All rights reserved. Inventronics is a licensee of the OSRAM brand. OSRAM is a trademark of ams OSRAM

chanhvinh.com

Lifespan

ECG lifetime	30000 h [1)]

1) At maximum T_c / 10% failure rate

Capabilities

Dimmable	No
Max. cable length to lamp/LED module	3.0 m [1)]
Suitable for fixtures with prot. class	I / II
Type of connection, input side	Terminal
Type of connection, output side	Terminal
Number of channels	1
Overheating protection	Yes
Overload protection	Yes
Short-circuit protection	Yes
Intended for no-load operation	No

1) Output wires must be routed as close as possible to each other

chanhvinh.com

chanhvinh.com

Certificates & standards

Approval marks – approval	CE / RCM / CCC / MM
Standards	Acc. to IEC 61347-1 / Acc. to IEC 61347-2-13 / Acc. to IEC 62384 / Acc. to IEC 61000-3-2 / Acc. to CISPR 15 / Acc. to IEC 61000-3-3 / Acc. to IEC 61547
Type of protection	IP20
Protection class	2

Logistical data

Commodity code	85044083900

Environmental information

Information according Art. 33 of EU Regulation (EC) 1907/2006 (REACh)	
Date of Declaration	24-05-2024
Primary Article Identifier	4052899605527
Declaration No. in SCIP database	In work

chanhvinh.com

© 2024, Inventronics GmbH. All rights reserved. Inventronics is a licensee of the OSRAM brand. OSRAM is a trademark of ams OSRAM

chanhvinh.com

Additional product information

- EMI pass verified with wire length of 3 m, from the ECG to the LED module at full load.
- Wiring longer than 3 m from ECG to LED module is possible, but site installation conditions may interfere with EMI with these longer cables. EMI is therefore not verified in this condition.
- For wires longer than 3 m, the appropriate cable cross section must be carefully selected to reduce voltage drop.

chanhvinh.com

Specifications are subject to changes without notice.

© 2024,Inventronics GmbH. All rights reserved. Inventronics is a licensee of the OSRAM brand. OSRAM is a trademark of ams OSRAM

chanhvinh.com

Download Data

File		
Product Datasheet	PDF	►ELEMENT 60 G2 Technical Datasheet (EN)
CAD data	Compressed	►ELEMENT 60 24V G2 STEP 041219
CAD data	Compressed	►ELEMENT 60 24V G2 IGS 041219
Mandatory Publications	PDF	►ELEMENT G2 UK DoC 4307614 01 061022
Declarations of conformity	PDF	►ELEMENT 24V G2 CE 3776665 07 080823
User instruction	PDF	►ELEMENT G2 Constant Voltage Power Supply

Ecodesign regulation information:

Intended for use with LED modules.
The forward voltage of the LED light source shall be within the defined operating window of the control gear in all operating conditions including dimming if applicable.

Separate control gear and light sources must be disposed of at certified disposal companies in accordance with Directive 2012/19/EU (WEEE) in the EU and with Waste Electrical and Electronic Equipment (WEEE) Regulations 2013 in the UK. For this purpose, collection points for recycling centres and take-back systems (CRSO) are available from retailers or private disposal companies, which accept separate control gear and light sources free of charge. In this way, raw materials are conserved and materials are recycled.

chanhvinh.com

© 2024, Inventronics GmbH. All rights reserved. Inventronics is a licensee of the OSRAM brand. OSRAM is a trademark of ams OSRAM

chanhvinh.com

inventronics

OSRAM

product - technical datasheet

Logistical Data

Product code	Product description	Packaging unit (Pieces/Unit)	Dimensions (length x width x height)	Volume	Gross weight
4052899605527	ELEMENT 60/220-240/24 G2	Shipping carton box 30 Pieces	421 x 225 x 141 mm	13.36 dm³	9493.00 g

The mentioned product code describes the smallest quantity unit which can be ordered. One shipping unit can contain one or more single products. When placing an order, for the quantity please enter single or multiples of a shipping unit

References / Links

For more information on the multi-level guarantee and the terms and conditions of the guarantee visit https://www.inventronics-light.com/multilevel-guarantees

Disclaimer

Subject to change without notice. Errors and omission excepted. Always make sure to use the most recent release.

© 2024, Inventronics GmbH. All rights reserved. Inventronics is a licensee of the OSRAM brand. OSRAM is a trademark of ams OSRAM