chanhvinh.com

inventronics

OSRAM

product - technical datasheet

ELEMENT 30/220-240/12 G2

ELEMENT G2 12V | Constant Voltage – Non dimmable



Product family features

- Linear form factor
- Power factor: >0.95 at full load
- Total Harmonic Distortion (THD): < 15%
- Output voltage tolerance: < 3%
- Up to 30,000 h @ T_c max / up to 50,000 h @ T_c -10 °C
- Lifetime: up to 30,000 h (temperature at max. t_c)

Product family benefits

- High efficiency (up to 91 %)
- Higher quality of light thanks to < 3% output ripple current
- Excellent price/performance ratio
- Class II design for wide application
- 3 years guarantee

Specifications are subject to changes without notice.

© 2024, Inventronics GmbH. All rights reserved. Inventronics is a licensee of the OSRAM brand. OSRAM is a trademark of ams OSRAM

chanhvinh.com

Areas of application

- Decorative lighting in hospitality, restaurants and Shops
- Shelf lighting
- Cove lighting
- Under cabinet lighting

chanhvinh.com

chanhvinh.com

Technical data

Electrical data

Nominal input voltage	220…240 V
Mains frequency	50…60 Hz
Input voltage AC	198…264 V
Power factor λ	> 0.95
Efficiency in full-load	86 % [1)]
Device power loss	4.9 W [2)]
Inrush current	<13.2 A [3)]
Max. ECG no. on circuit breaker 10 A (B)	29
Max. ECG no. on circuit breaker 16 A (B)	47
Surge capability (L/N-Ground)	2 kV
Surge capability (L-N)	1 kV
Nominal output voltage	12.5 V
U-OUT (working voltage)	12.125 V ~ 12.875 V
Nominal output power	30 W
Maximum output power	30 W
Galvanic isolation	SELV

1) at 230 V, 50 Hz
2) At Full load, 230 V, 50 Hz
3) Max, th = 200µs

© 2024, Inventronics GmbH. All rights reserved. Inventronics is a licensee of the OSRAM brand. OSRAM is a trademark of ams OSRAM

chanhvinh.com

Dimensions & weight

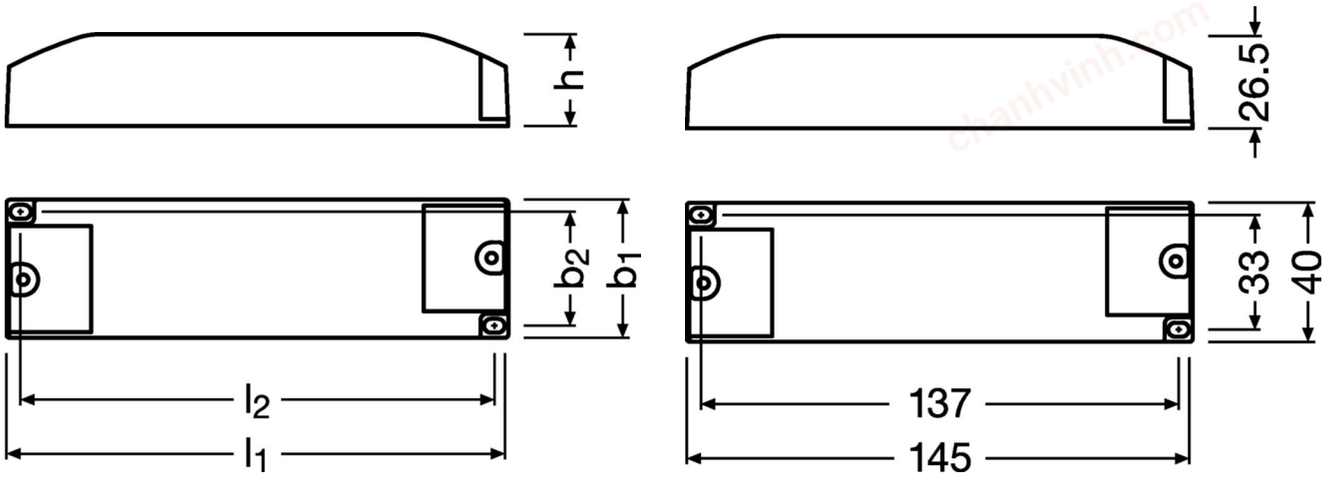

Length	145.0 mm
Width	40.0 mm
Height	26.5 mm
Cable cross-section, input side	0.75…1.5 mm²
Cable cross-section, output side	0.5…1.5 mm²
Wire preparation length, input side	5.0 mm
Product weight	100.00 g

Colors & materials

Casing material	Plastic

Temperatures & operating conditions

Ambient temperature range	-20…+50 °C
Maximum temperature at tc test point	75 °C
Max.housing temperature in case of fault	110 °C
Temperature range at storage	-40…+85 °C
Permitted rel. humidity during operation	5…85 % [1)]

1) Maximum 56 days/year at 85 %

Specifications are subject to changes without notice.

© 2024, Inventronics GmbH. All rights reserved. Inventronics is a licensee of the OSRAM brand. OSRAM is a trademark of ams OSRAM

chanhvinh.com

Lifespan

ECG lifetime	30000 h [1)]

1) At maximum T_c = 75°C / 10% failure rate / At maximum T_c = 65°C / 10% failure rate

Capabilities

Dimmable	No
Max. cable length to lamp/LED module	3.0 m [1)]
Suitable for fixtures with prot. class	I / II
Number of channels	1
Short-circuit protection	Yes
Intended for no-load operation	No

1) Output wires must be routed as close as possible to each other

chanhvinh.com

© 2024, Inventronics GmbH. All rights reserved. Inventronics is a licensee of the OSRAM brand. OSRAM is a trademark of ams OSRAM

chanhvinh.com

Certificates & standards

Approval marks – approval	BIS / CCC / CE / MM / RCM / UKCA
Standards	Acc. to EN 61347-1 / Acc. to EN 61347-2-13 / Acc. to EN 55015 / Acc. to EN 61547 / Acc. to EN 60598-1 / Acc. to EN 62384 / Acc. to CISPR 15 / Acc. to EN 61000-3-2/IEC 61000-3-2
Type of protection	IP20
Protection class	2

Logistical data

Commodity code	85044083900

Environmental information

Information according Art. 33 of EU Regulation (EC) 1907/2006 (REACh)	
Date of Declaration	24-05-2024
Primary Article Identifier	4062172277846
Declaration No. in SCIP database	In work

chanhvinh.com

© 2024, Inventronics GmbH. All rights reserved. Inventronics is a licensee of the OSRAM brand. OSRAM is a trademark of ams OSRAM

chanhvinh.com

Download Data

File		
Mandatory Publications	PDF	►ELEMENT 12V G2 CE 4399675 03 160823
Mandatory Publications	PDF	►ELEMENT 12V G2 UK DoC 4438367 061022
User instruction	PDF	►ELEMENT G2

chanhvinh.com

© 2024,Inventronics GmbH. All rights reserved. Inventronics is a licensee of the OSRAM brand. OSRAM is a trademark of ams OSRAM

chanhvinh.com

Logistical Data

Product code	Product description	Packaging unit (Pieces/Unit)	Dimensions (length x width x height)	Volume	Gross weight
4062172277846	ELEMENT 30/220-240/12 G2	Shipping carton box 40 Pieces	421 x 315 x 96 mm	12.73 dm³	4559.00 g

The mentioned product code describes the smallest quantity unit which can be ordered. One shipping unit can contain one or more single products. When placing an order, for the quantity please enter single or multiples of a shipping unit

Disclaimer

Subject to change without notice. Errors and omission excepted. Always make sure to use the most recent release.

chanhvinh.com

© 2024, Inventronics GmbH. All rights reserved. Inventronics is a licensee of the OSRAM brand. OSRAM is a trademark of ams OSRAM