chanhvinh.com

GRM60 Series

Plastic Filter Kit
Fits 60mm Fans



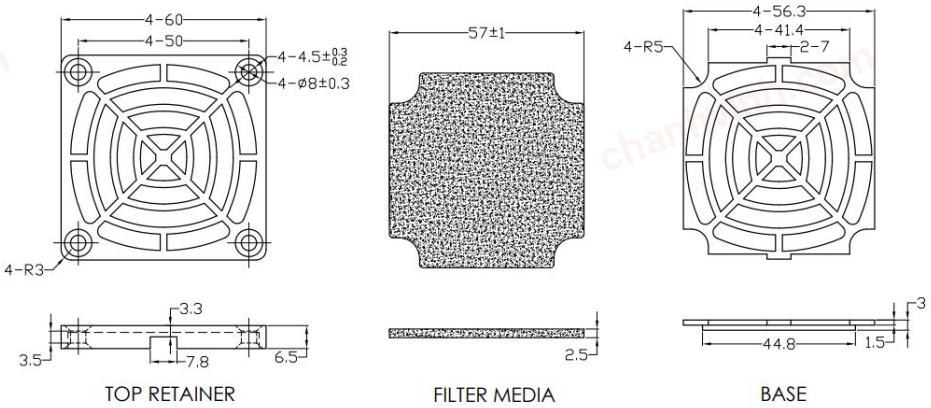

Guard & Retainer	Plastic - Reinforced ABS, UL Approved Materials, Rating UL94V-O	Removable retainer makes cleaning or replacing media simple.
Media	Polyurethane foam material meets UL94 HF-1 or higher. Porous mesh 30PPI, 45PPI, or 60PPI available. PPI = Pores Per Inch. 30 or 45 PPI recommended for most fan applications. Low air resistance, filtration of particulate matter, noise abatement.	

Part Number	Description
GRM60-30	60mm Fan filter kit, includes G60P guard, R60P retainer, and M60-30 media
GRM60-45	60mm Fan filter kit, includes G60P guard, R60P retainer, and M60-45 media
GRM60-30/PK	10-Pack GRM60-30 filter kits, Boxed
GRM60-45/PK	10-Pack GRM60-45 filter kits, Boxed

Knight Electronics, Inc.
10557 Metric Drive
Dallas, TX 75243
214-340-0265

Revised 2/1/2022