chanhvinh.com

DATA SHEET
www.onsemi.com

NPN Epitaxial Silicon Transistor

SS8050

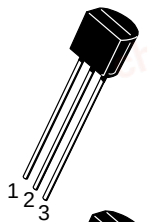

TO−92−3
CASE 135AN

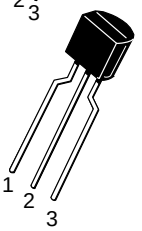

TO−92−3
CASE 135AR

1. Emitter
2. Base
3. Collector

Features

- 2 W Output Amplifier of Portable Radios in Class B Push−Pull Operation
- Complementary to SS8550
- Collector Current: I_C = 1.5 A
- These Devices are Pb−Free, Halogen Free/BFR Free and are RoHS Compliant

ABSOLUTE MAXIMUM RATINGS (T_A = 25°C unless otherwise noted)

Parameter	Symbol	Value	Unit
Collector−Base Voltage	V_{CBO}	40	V
Collector−Emitter Voltage	V_{CEO}	25	V
Emitter−Base Voltage	V_{EBO}	6	V
Collector Current	I_C	1.5	A
Junction Temperature	T_J	150	°C
Storage Temperature	T_{STG}	−65 to 150	°C

Stresses exceeding those listed in the Maximum Ratings table may damage the device. If any of these limits are exceeded, device functionality should not be assumed, damage may occur and reliability may be affected.

THERMAL CHARACTERISTICS (Note 1)

(T_A = 25°C unless otherwise noted)

Parameter	Symbol	Value	Unit
Power Dissipation	P_D	1	W
Derate Above 25°C		8	mW/°C
Thermal Resistance, Junction−to−Ambient	$R_{\theta JA}$	125	°C/W

1. PCB size: FR−4, 76 mm x 114 mm x 1.57 mm (3.0 inch x 4.5 inch x 0.062 inch) with minimum land pattern size.

MARKING DIAGRAM

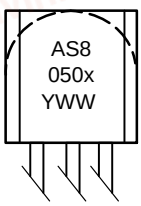

S8050x = Specific Device Code
Line 1: A = Assembly Location
Line 2: x = B, C or D
Line 3: Y = Year
WW= Work Week

ORDERING INFORMATION

See detailed ordering and shipping information on page 2 of this data sheet.

© Semiconductor Components Industries, LLC, 2004

chanhvinh.com

SS8050

ELECTRICAL CHARACTERISTICS (T_C = 25°C unless otherwise noted)

Symbol	Parameter	Conditions	Min.	Typ.	Max.	Unit
BV_{CBO}	Collector−Base Breakdown Voltage	I_C = 100 μA, I_E = 0	40			V
BV_{CEO}	Collector−Emitter Breakdown Voltage	I_C = 2 mA, I_B = 0	25			V
BV_{EBO}	Emitter−Base Breakdown Voltage	I_E = 100 μA, I_C = 0	6			V
I_{CBO}	Collector Cut−Off Current	V_{CB} = 35 V, I_E = 0			100	nA
I_{EBO}	Emitter Cut−Off Current	V_{EB} = 6 V, I_C = 0			100	nA
h_{FE1}	DC Current Gain	V_{CE} = 1 V, I_C = 5 mA	45			
h_{FE2}		V_{CE} = 1 V, I_C = 100 mA	85		300	
h_{FE3}		V_{CE} = 1 V, I_C = 800 mA	40			
V_{CE}(sat)	Collector−Emitter Saturation Voltage	I_C = 800 mA, I_B = 80 mA			0.5	V
V_{BE}(sat)	Base−Emitter Saturation Voltage	I_C = 800 mA, I_B = 80 mA			1.2	V
V_{BE}(on)	Base−Emitter On Voltage	V_{CE} = 1 V, I_C = 10 mA			1	V
C_{ob}	Output Capacitance	V_{CB} = 10 V, I_E = 0, f = 1 MHz		9.0		pF
f_T	Current Gain Bandwidth Product	V_{CE} = 10 V, I_C = 50 mA	100			MHz

Product parametric performance is indicated in the Electrical Characteristics for the listed test conditions, unless otherwise noted. Product performance may not be indicated by the Electrical Characteristics if operated under different conditions.

h_{FE} CLASSIFICATION

Classification	B	C	D
h_{FE2}	85 ~ 160	120 ~ 200	160 ~ 300

ORDERING INFORMATION

Part Number	Top Mark	Package	Shipping
SS8050BBU	S8050B	TO−92−3, case 135AN (Pb−Free)	10,000 Units/ Bulk Box
SS8050CBU	S8050C	TO−92−3, case 135AN (Pb−Free)	10,000 Units/ Bulk Box
SS8050CTA	S8050C	TO−92−3, case 135AR (Pb−Free)	2,000 Units/ Fan−Fold
SS8050DBU	S8050D	TO−92−3, case 135AN (Pb−Free)	10,000 Units/ Bulk Box
SS8050DTA	S8050D	TO−92−3, case 135AR (Pb−Free)	2,000 Units/ Fan−Fold

chanhvinh.com

TYPICAL PERFORMANCE CHARACTERISTICS

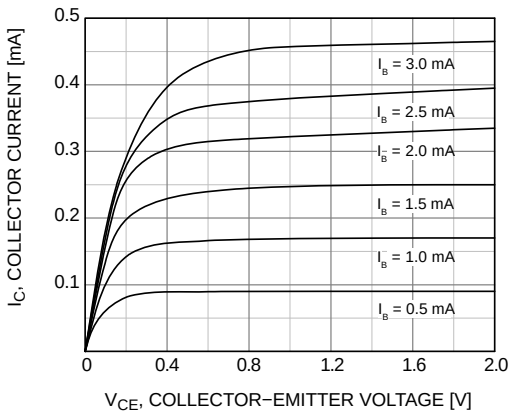

Figure 1. Static Characteristic

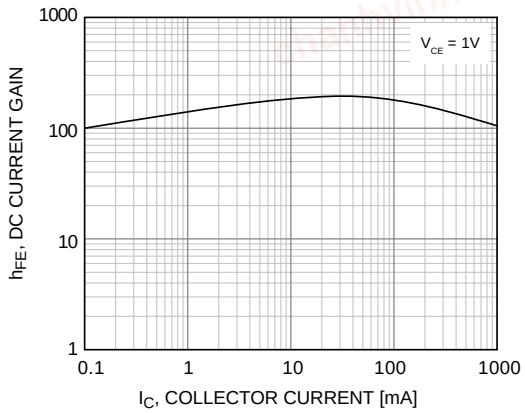

Figure 2. DC Current Gain

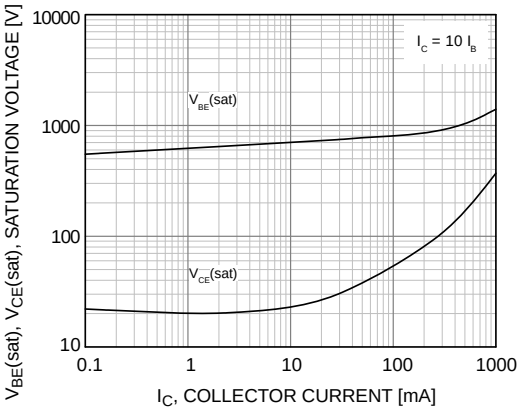

Figure 3. Base−Emitter Saturation Voltage and Collector−Emitter Saturation Voltage

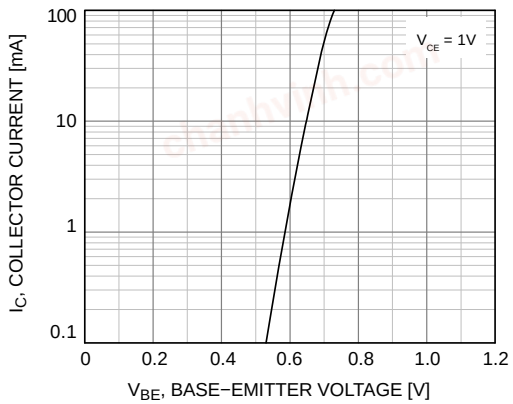

Figure 4. Base−Emitter On Voltage

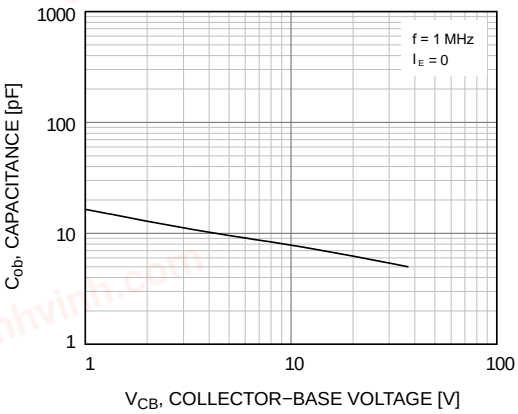

Figure 5. Collector Output Capacitance

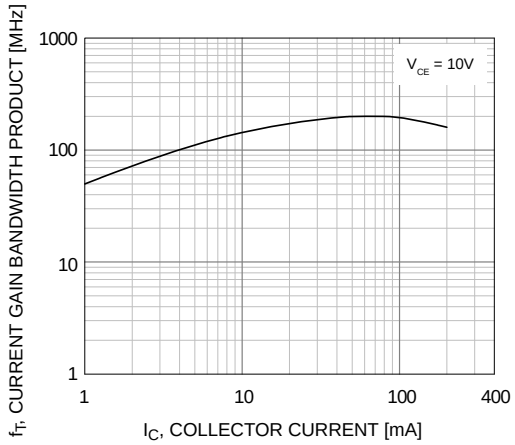

Figure 6. Current Gain Bandwidth Product

chanhvinh.com

MECHANICAL CASE OUTLINE
PACKAGE DIMENSIONS

ON Semiconductor®

TO−92 3 4.825x4.76
CASE 135AN
ISSUE O

DATE 31 JUL 2016

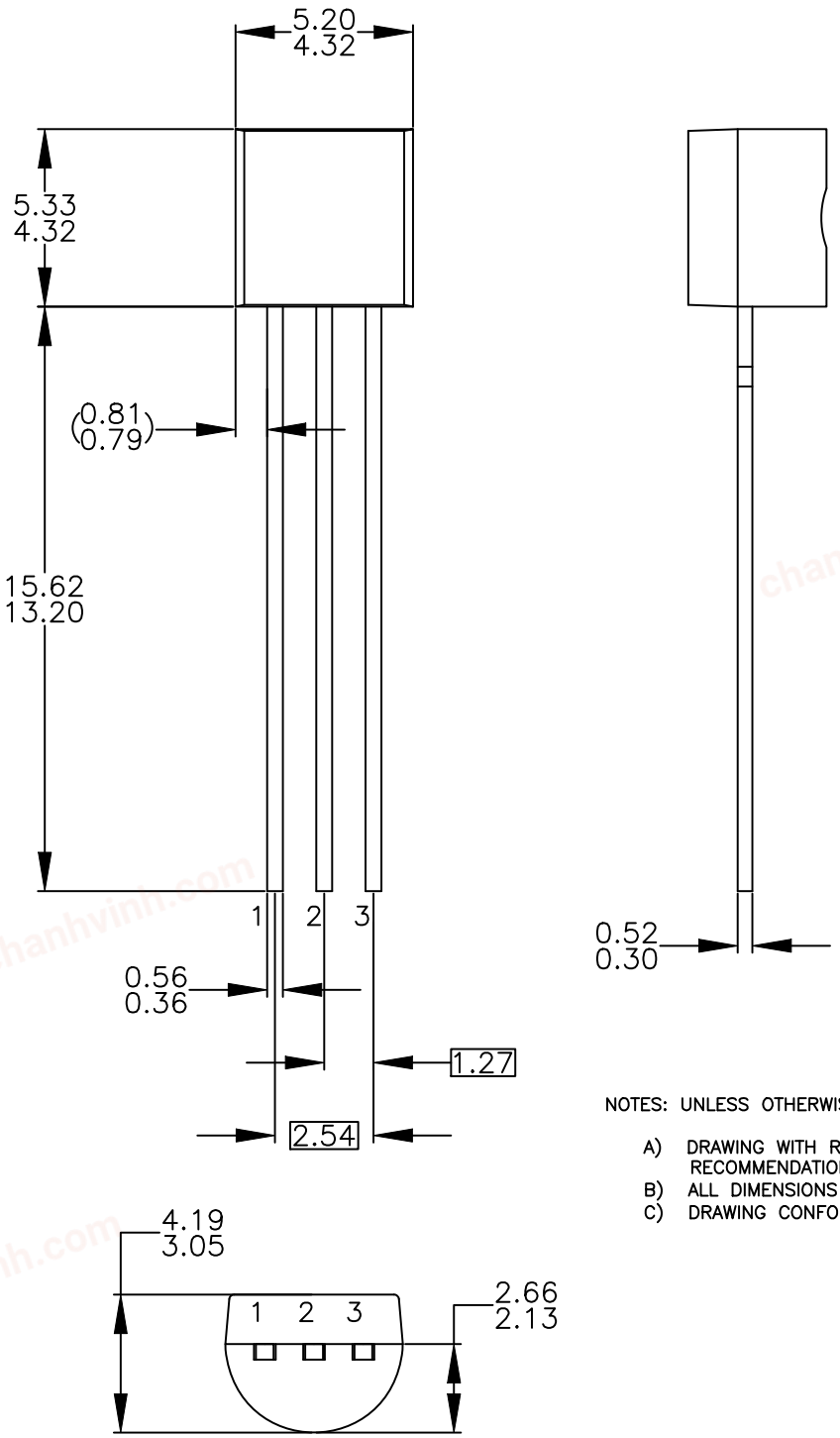

NOTES: UNLESS OTHERWISE SPECIFIED

A) DRAWING WITH REFERENCE TO JEDEC TO−92 RECOMMENDATIONS.
B) ALL DIMENSIONS ARE IN MILLIMETERS.
C) DRAWING CONFORMS TO ASME Y14.5M−2009.

DOCUMENT NUMBER:	**98AON13880G**	Electronic versions are uncontrolled except when accessed directly from the Document Repository. Printed versions are uncontrolled except when stamped "CONTROLLED COPY" in red.	
DESCRIPTION:	**TO−92 3 4.825X4.76**		**PAGE 1 OF 1**

ON Semiconductor and ON are trademarks of Semiconductor Components Industries, LLC dba ON Semiconductor or its subsidiaries in the United States and/or other countries. ON Semiconductor reserves the right to make changes without further notice to any products herein. ON Semiconductor makes no warranty, representation or guarantee regarding the suitability of its products for any particular purpose, nor does ON Semiconductor assume any liability arising out of the application or use of any product or circuit, and specifically disclaims any and all liability, including without limitation special, consequential or incidental damages. ON Semiconductor does not convey any license under its patent rights nor the rights of others.

© Semiconductor Components Industries, LLC, 2019

chanhvinh.com

MECHANICAL CASE OUTLINE
PACKAGE DIMENSIONS

ON Semiconductor®

TO−92 3 4.83x4.76 LEADFORMED
CASE 135AR
ISSUE O

DATE 30 SEP 2016

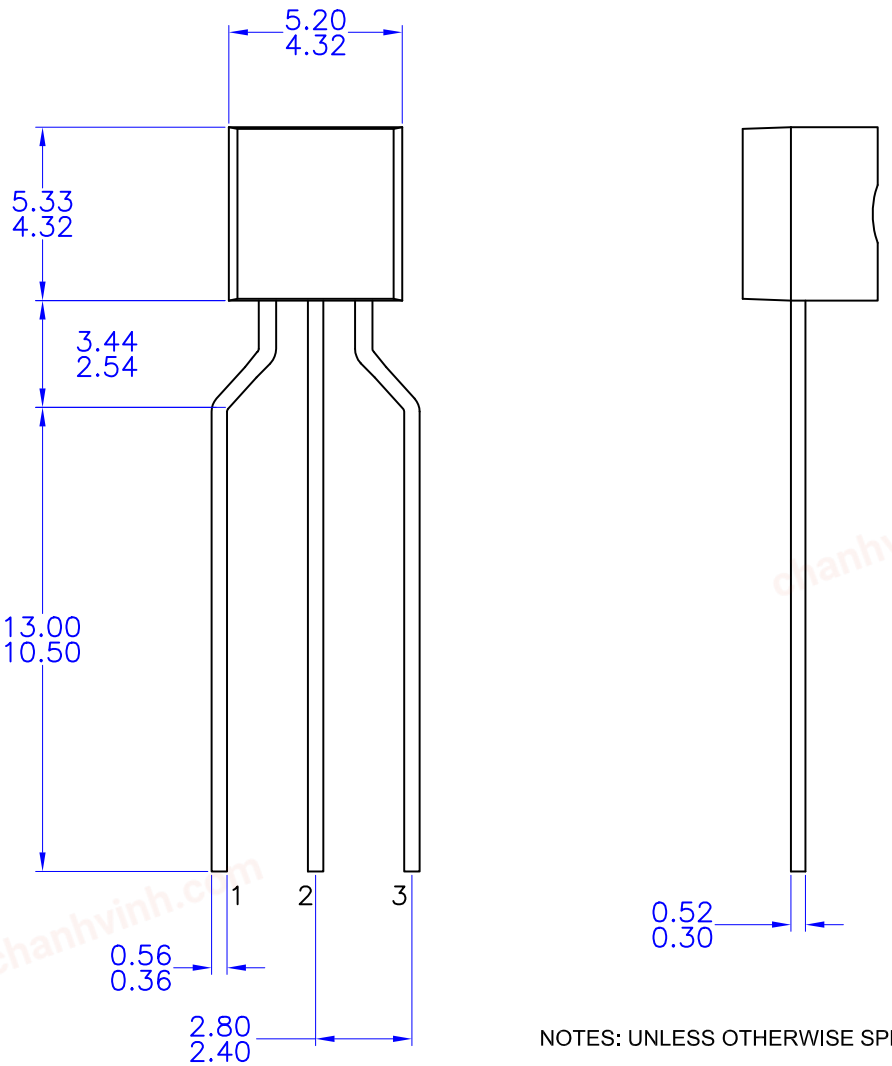

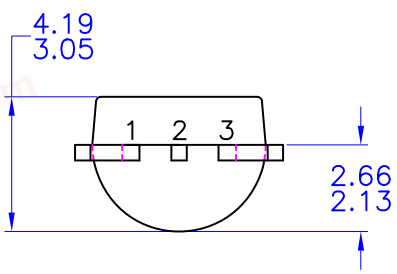

NOTES: UNLESS OTHERWISE SPECIFIED

A) DRAWING WITH REFERENCE TO JEDEC TO-92 RECOMMENDATIONS.
B) ALL DIMENSIONS ARE IN MILLIMETERS.
C) DRAWING CONFORMS TO ASME Y14.5M-1994

DOCUMENT NUMBER:	**98AON13879G**	Electronic versions are uncontrolled except when accessed directly from the Document Repository. Printed versions are uncontrolled except when stamped "CONTROLLED COPY" in red.	
DESCRIPTION:	**TO−92 3 4.83X4.76 LEADFORMED**		**PAGE 1 OF 1**

ON Semiconductor and ON are trademarks of Semiconductor Components Industries, LLC dba ON Semiconductor or its subsidiaries in the United States and/or other countries. ON Semiconductor reserves the right to make changes without further notice to any products herein. ON Semiconductor makes no warranty, representation or guarantee regarding the suitability of its products for any particular purpose, nor does ON Semiconductor assume any liability arising out of the application or use of any product or circuit, and specifically disclaims any and all liability, including without limitation special, consequential or incidental damages. ON Semiconductor does not convey any license under its patent rights nor the rights of others.

© Semiconductor Components Industries, LLC, 2019

chanhvinh.com

onsemi, ONSEMI., and other names, marks, and brands are registered and/or common law trademarks of Semiconductor Components Industries, LLC dba "**onsemi**" or its affiliates and/or subsidiaries in the United States and/or other countries. **onsemi** owns the rights to a number of patents, trademarks, copyrights, trade secrets, and other intellectual property. A listing of **onsemi**'s product/patent coverage may be accessed at www.onsemi.com/site/pdf/Patent−Marking.pdf. **onsemi** reserves the right to make changes at any time to any products or information herein, without notice. The information herein is provided "as−is" and **onsemi** makes no warranty, representation or guarantee regarding the accuracy of the information, product features, availability, functionality, or suitability of its products for any particular purpose, nor does **onsemi** assume any liability arising out of the application or use of any product or circuit, and specifically disclaims any and all liability, including without limitation special, consequential or incidental damages. Buyer is responsible for its products and applications using **onsemi** products, including compliance with all laws, regulations and safety requirements or standards, regardless of any support or applications information provided by **onsemi**. "Typical" parameters which may be provided in **onsemi** data sheets and/or specifications can and do vary in different applications and actual performance may vary over time. All operating parameters, including "Typicals" must be validated for each customer application by customer's technical experts. **onsemi** does not convey any license under any of its intellectual property rights nor the rights of others. **onsemi** products are not designed, intended, or authorized for use as a critical component in life support systems or any FDA Class 3 medical devices or medical devices with a same or similar classification in a foreign jurisdiction or any devices intended for implantation in the human body. Should Buyer purchase or use **onsemi** products for any such unintended or unauthorized application, Buyer shall indemnify and hold **onsemi** and its officers, employees, subsidiaries, affiliates, and distributors harmless against all claims, costs, damages, and expenses, and reasonable attorney fees arising out of, directly or indirectly, any claim of personal injury or death associated with such unintended or unauthorized use, even if such claim alleges that **onsemi** was negligent regarding the design or manufacture of the part. **onsemi** is an Equal Opportunity/Affirmative Action Employer. This literature is subject to all applicable copyright laws and is not for resale in any manner.

ADDITIONAL INFORMATION

TECHNICAL PUBLICATIONS:
Technical Library: www.onsemi.com/design/resources/technical−documentation
onsemi Website: www.onsemi.com

ONLINE SUPPORT: www.onsemi.com/support
For additional information, please contact your local Sales Representative at www.onsemi.com/support/sales