chanhvinh.com

FAIRCHILD SEMICONDUCTOR®

September 2006

QEB363
Subminiature Plastic Infrared Emitting Diode

Features

- T-3/4 (2mm) Surface Mount Package
- Tape & Reel Option (See Tape & Reel Specifications)
- Lead Form Options: Gullwing, Yoke, Z-Bend
- Narrow Emission Angle, 24°
- Wavelength = 940nm, GaAs
- Clear Water Lens
- Matched Photosensor: QSB363
- High Radiant Intensity

Package Dimensions

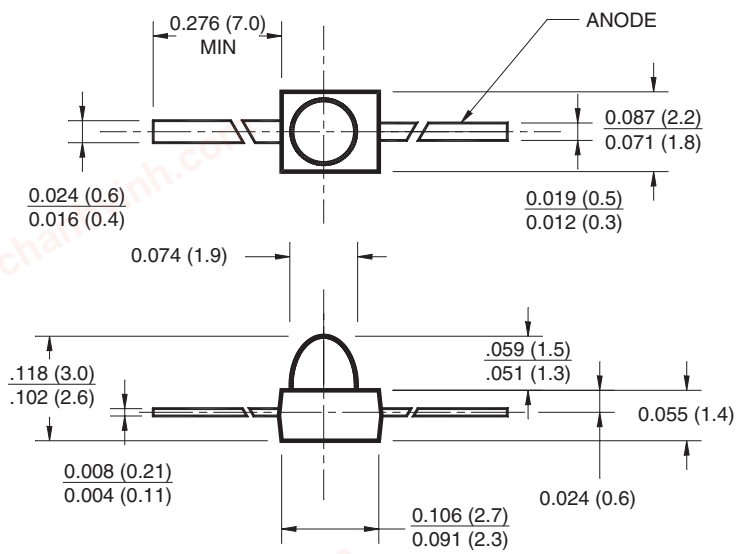

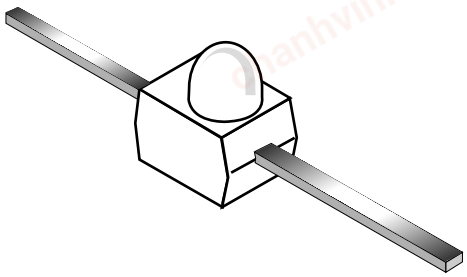

Schematic

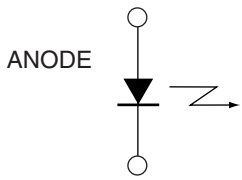

Notes:

1. Dimensions are in inches (mm).
2. Tolerance of ±.010 (.25) on all non nominal dimensions unless otherwise specified.

©2002 Fairchild Semiconductor Corporation

chanhvinh.com

Absolute Maximum Ratings (T_A = 25°C unless otherwise specified)

Symbol	Parameter	Rating	Unit
T_{OPR}	Operating Temperature	-40 to +100	°C
T_{STG}	Storage Temperature	-40 to +100	°C
T_{SOL-I}	Soldering Temperature (Iron)[2,3,4]	240 for 5 sec	°C
T_{SOL-F}	Soldering Temperature (Flow)[2,3]	260 for 10 sec	°C
I_F	Continuous Forward Current	50	mA
V_R	Reverse Voltage	5	V
P_D	Power Dissipation[1]	100	mW

Notes:

1. Derate power dissipation linearly 1.33mW/°C above 25°C.
2. RMA flux is recommended.
3. Methanol or isopropyl alcohols are recommended as cleaning agents.
4. Soldering iron 1/16" (1.6mm) minimum from housing.

Electrical/Optical Characteristics (T_A = 25°C)

Symbol	Parameter	Test Conditions	Min.	Typ.	Max.	Units
λ_P	Peak Emission Wavelength	I_F = 100mA		940		nm
Θ	Emission Angle	I_F = 100mA		±12		°
V_F	Forward Voltage	I_F = 100mA, t_p = 20ms			1.6	V
I_R	Reverse Current	V_R = 5V			100	µA
I_e	Radiant Intensity	I_F = 100mA, tp = 20ms	8			mW/sr
t_r	Rise Time	I_F = 100mA		1		µs
t_f	Fall Time	t_p = 20ms		1		µs

©2002 Fairchild Semiconductor Corporation

chanhvinh.com

Typical Performance Curves

Fig. 1 Maximum Forward Current vs. Temperature

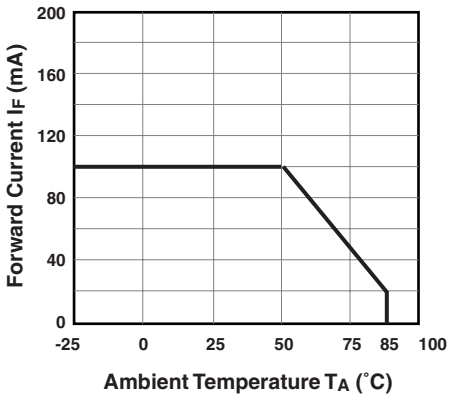

Fig. 2 Relative Radiant Intensity vs. Wavelength

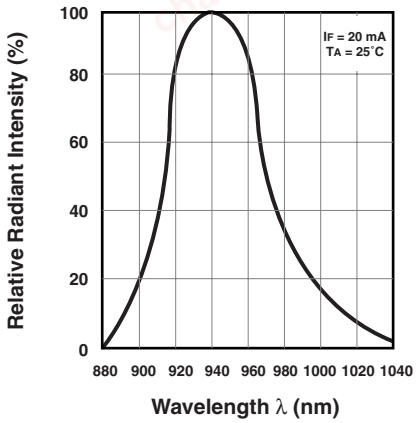

Fig. 3 Peak Emission Wavelength vs. Ambient Temperature

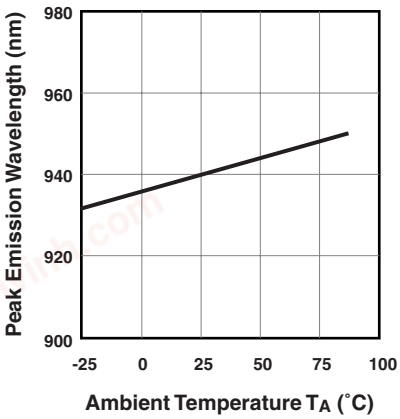

Fig. 4 Forward Current vs. Forward Voltage

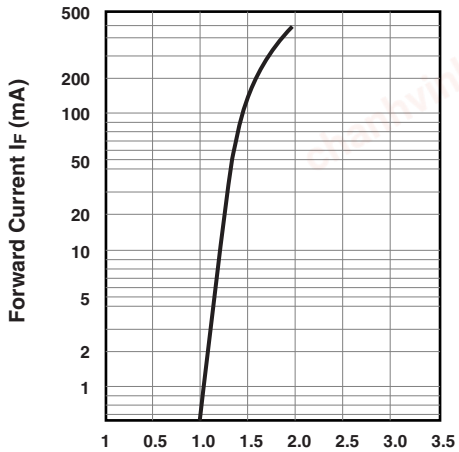

Fig. 5 Relative Radiant Flux vs. Ambient Temperature

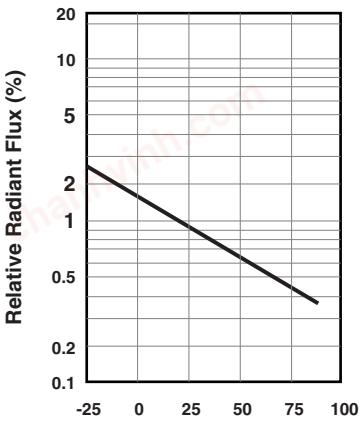

Fig. 6 Relative Radiant Intensity vs. Angular Displacement

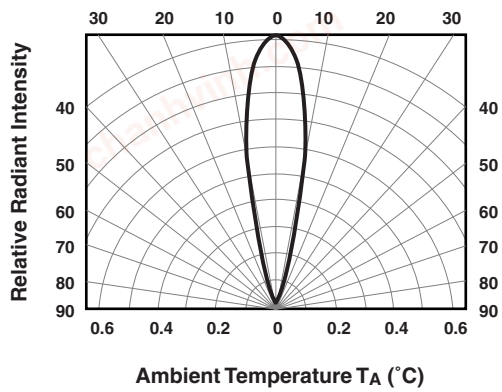

chanhvinh.com

Surface Mount Options for T-3/4 Package

Features

- Three lead forming options: Gull Wing, Yoke and Z-Bend
- Compatible with automatic placement equipment
- Supplied on tape and reel or in bulk packaging
- Compatible with vapor phase reflow solder processes

Gull Wing Lead Configuration

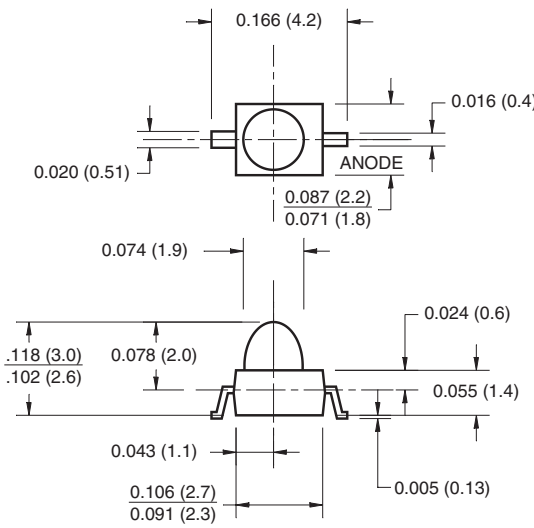

Yoke Lead Configuration

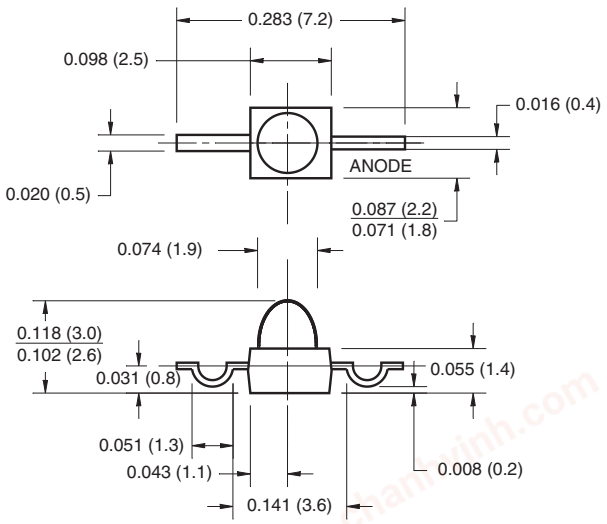

Z-Bend Lead Configuration

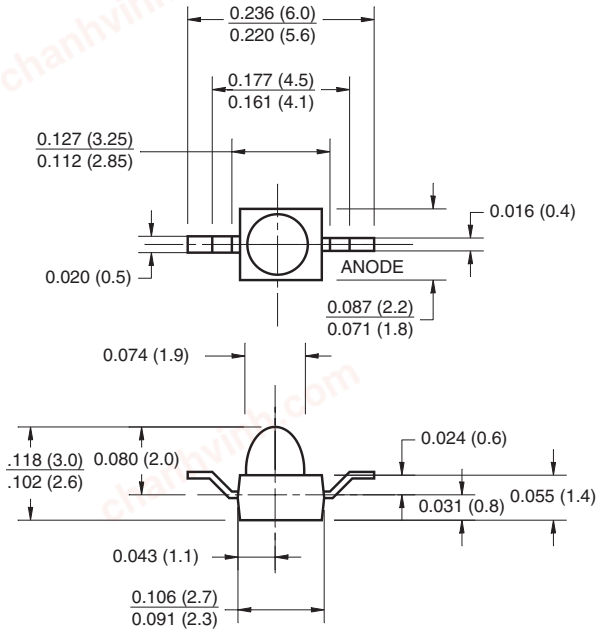

Notes: (Applies to all package drawings)

1. Dimensions are in inches (mm).
2. Tolerance of ±.010 (.25) on all non nominal dimensions unless otherwise specified.

©2002 Fairchild Semiconductor Corporation

chanhvinh.com

TRADEMARKS

The following are registered and unregistered trademarks Fairchild Semiconductor owns or is authorized to use and is not intended to be an exhaustive list of all such trademarks.

ACEx™
ActiveArray™
Bottomless™
Build it Now™
CoolFET™
CROSSVOLT™
DOME™
EcoSPARK™
E^2CMOS™
EnSigna™
FACT™
FAST®
FASTr™
FPS™
FRFET™
FACT Quiet Series™
GlobalOptoisolator™
GTO™
HiSeC™
I^2C™
i-Lo™
ImpliedDisconnect™
IntelliMAX™
ISOPLANAR™
LittleFET™
MICROCOUPLER™
MicroFET™
MicroPak™
MICROWIRE™
MSX™
MSXPro™
OCX™
OCXPro™
OPTOLOGIC®
OPTOPLANAR™
PACMAN™
POP™
Power247™
PowerEdge™
PowerSaver™
PowerTrench®
QFET®
QS™
QT Optoelectronics™
Quiet Series™
RapidConfigure™
RapidConnect™
µSerDes™
ScalarPump™
SILENT SWITCHER®
SMART START™
SPM™
Stealth™
SuperFET™
SuperSOT™-3
SuperSOT™-6
SuperSOT™-8
SyncFET™
TCM™
TinyBoost™
TinyBuck™
TinyPWM™
TinyPower™
TinyLogic®
TINYOPTO™
TruTranslation™
UHC™
UniFET™
UltraFET®
VCX™
Wire™

Across the board. Around the world.™
The Power Franchise®
Programmable Active Droop™

DISCLAIMER

FAIRCHILD SEMICONDUCTOR RESERVES THE RIGHT TO MAKE CHANGES WITHOUT FURTHER NOTICE TO ANY PRODUCTS HEREIN TO IMPROVE RELIABILITY, FUNCTION, OR DESIGN. FAIRCHILD DOES NOT ASSUME ANY LIABILITY ARISING OUT OF THE APPLICATION OR USE OF ANY PRODUCT OR CIRCUIT DESCRIBED HEREIN; NEITHER DOES IT CONVEY ANY LICENSE UNDER ITS PATENT RIGHTS, NOR THE RIGHTS OF OTHERS. THESE SPECIFICATIONS DO NOT EXPAND THE TERMS OF FAIRCHILD'S WORLDWIDE TERMS AND CONDITIONS, SPECIFICALLY THE WARRANTY THEREIN, WHICH COVERS THESE PRODUCTS.

LIFE SUPPORT POLICY

FAIRCHILD'S PRODUCTS ARE NOT AUTHORIZED FOR USE AS CRITICAL COMPONENTS IN LIFE SUPPORT DEVICES OR SYSTEMS WITHOUT THE EXPRESS WRITTEN APPROVAL OF FAIRCHILD SEMICONDUCTOR CORPORATION.

As used herein:
1. Life support devices or systems are devices or systems which, (a) are intended for surgical implant into the body, or (b) support or sustain life, or (c) whose failure to perform when properly used in accordance with instructions for use provided in the labeling, can be reasonably expected to result in significant injury to the user.

2. A critical component is any component of a life support device or system whose failure to perform can be reasonably expected to cause the failure of the life support device or system, or to affect its safety or effectiveness.

PRODUCT STATUS DEFINITIONS

Definition of Terms

Datasheet Identification	Product Status	Definition
Advance Information	Formative or In Design	This datasheet contains the design specifications for product development. Specifications may change in any manner without notice.
Preliminary	First Production	This datasheet contains preliminary data, and supplementary data will be published at a later date. Fairchild Semiconductor reserves the right to make changes at any time without notice to improve design.
No Identification Needed	Full Production	This datasheet contains final specifications. Fairchild Semiconductor reserves the right to make changes at any time without notice to improve design.
Obsolete	Not In Production	This datasheet contains specifications on a product that has been discontinued by Fairchild semiconductor. The datasheet is printed for reference information only.

Rev. I20

©2002 Fairchild Semiconductor Corporation