chanhvinh.com

MOSFET - Power, N-Channel, SUPERFET® III, FAST

650 V, 360 mΩ, 10 A

NTPF360N65S3H

ON Semiconductor®

www.onsemi.com

Description

SUPERFET III MOSFET is ON Semiconductor's brand-new high voltage super-junction (SJ) MOSFET family that is utilizing charge balance technology for outstanding low on-resistance and lower gate charge performance. This advanced technology is tailored to minimize conduction loss, provides superior switching performance, and withstand extreme dv/dt rate.

Consequently, SUPERFET III FAST MOSFET series helps minimize various power systems and improve system efficiency.

Features

- 700 V @ T_J = 150°C
- Typ. $R_{DS(on)}$ = 296 mΩ
- Ultra Low Gate Charge (Typ. Q_g = 17.5 nC)
- Low Effective Output Capacitance (Typ. $C_{oss(eff.)}$ = 180 pF)
- 100% Avalanche Tested
- These Devices are Pb−Free and are RoHS Compliant

Applications

- Computing / Display Power Supplies
- Telecom / Server Power Supplies
- Industrial Power Supplies
- Lighting / Charger / Adapter

V_{DSS}	$R_{DS(ON)}$ MAX	I_D MAX
650 V	360 mΩ @ 10 V	10 A

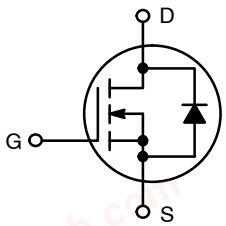

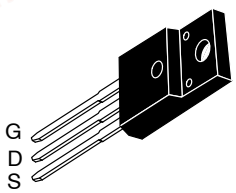

TO−220 FULLPAK
CASE 221D

MARKING DIAGRAM

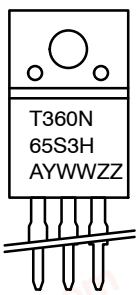

T360N65S3H = Specific Device Code
A = Assembly Location
Y = Year
WW = Work Week
ZZ = Lot Code

ORDERING INFORMATION

See detailed ordering and shipping information on page 2 of this data sheet.

© Semiconductor Components Industries, LLC, 2020

chanhvinh.com

NTPF360N65S3H

ABSOLUTE MAXIMUM RATINGS (T_C = 25°C, Unless otherwise specified)

Symbol	Parameter		Value	Unit
V_{DSS}	Drain to Source Voltage		650	V
V_{GSS}	Gate to Source Voltage	DC	±30	V
		AC (f > 1 Hz)	±30	V
I_D	Drain Current	Continuous (T_C = 25°C)	10*	A
		Continuous (T_C = 100°C)	6*	
I_{DM}	Drain Current	Pulsed (Note 1)	28*	A
E_{AS}	Single Pulsed Avalanche Energy (Note 2)		75	mJ
I_{AS}	Avalanche Current (Note 2)		1.9	A
E_{AR}	Repetitive Avalanche Energy (Note 1)		0.83	mJ
dv/dt	MOSFET dv/dt		120	V/ns
	Peak Diode Recovery dv/dt (Note 3)		20	
P_D	Power Dissipation	(T_C = 25°C)	26	W
		Derate Above 25°C	0.21	W/°C
T_J, T_{STG}	Operating and Storage Temperature Range		−55 to +150	°C
T_L	Maximum Lead Temperature for Soldering, 1/8″ from Case for 5 s		260	°C

Stresses exceeding those listed in the Maximum Ratings table may damage the device. If any of these limits are exceeded, device functionality should not be assumed, damage may occur and reliability may be affected.
*Drain current limited by maximum junction temperature.
1. Repetitive rating: pulse-width limited by maximum junction temperature.
2. I_{AS} = 1.9 A, R_G = 25 Ω, starting T_J = 25°C.
3. I_{SD} ≤ 5.0 A, di/dt ≤ 200 A/μs, V_{DD} ≤ 400 V, starting T_J = 25°C.

THERMAL CHARACTERISTICS

Symbol	Parameter	Value	Unit
$R_{\theta JC}$	Thermal Resistance, Junction to Case, Max.	4.71	°C/W
$R_{\theta JA}$	Thermal Resistance, Junction to Ambient, Max.	62.5	

PACKAGE MARKING AND ORDERING INFORMATION

Part Number	Top Marking	Package	Shipping
NTPF360N65S3H	T360N65S3H	TO−220 FULLPAK	50 Units / Tube

chanhvinh.com

ELECTRICAL CHARACTERISTICS (T_C = 25°C unless otherwise noted)

Symbol	Parameter	Test Conditions	Min	Typ	Max	Unit
OFF CHARACTERISTICS						
BV_{DSS}	Drain to Source Breakdown Voltage	V_{GS} = 0 V, I_D = 1 mA, T_J = 25°C	650			V
		V_{GS} = 0 V, I_D = 1 mA, T_J = 150°C	700			V
$\Delta BV_{DSS}/\Delta T_J$	Breakdown Voltage Temperature Coefficient	I_D = 10 mA, Referenced to 25°C		0.63		V/°C
I_{DSS}	Zero Gate Voltage Drain Current	V_{DS} = 650 V, V_{GS} = 0 V			1	μA
		V_{DS} = 520 V, T_C = 125°C		2.6		
I_{GSS}	Gate to Body Leakage Current	V_{GS} = ±30 V, V_{DS} = 0 V			±100	nA
ON CHARACTERISTICS						
$V_{GS(th)}$	Gate Threshold Voltage	V_{GS} = V_{DS}, I_D = 0.7 mA	2.4		4.0	V
$R_{DS(on)}$	Static Drain to Source On Resistance	V_{GS} = 10 V, I_D = 5.0 A		296	360	mΩ
g_{FS}	Forward Transconductance	V_{DS} = 20 V, I_D = 5.0 A		11.2		S
DYNAMIC CHARACTERISTICS						
C_{iss}	Input Capacitance	V_{DS} = 400 V, V_{GS} = 0 V, f = 250 kHz		916		pF
C_{oss}	Output Capacitance			15		pF
$C_{oss(eff.)}$	Effective Output Capacitance	V_{DS} = 0 V to 400 V, V_{GS} = 0 V		180		pF
$C_{oss(er.)}$	Energy Related Output Capacitance	V_{DS} = 0 V to 400 V, V_{GS} = 0 V		24		pF
$Q_{g(tot)}$	Total Gate Charge at 10 V	V_{DS} = 400 V, I_D = 5.0 A, V_{GS} = 10 V (Note 4)		17.5		nC
Q_{gs}	Gate to Source Gate Charge			4.3		nC
Q_{gd}	Gate to Drain “Miller” Charge			5		nC
ESR	Equivalent Series Resistance	f = 1 MHz		0.9		Ω
SWITCHING CHARACTERISTICS						
$t_{d(on)}$	Turn-On Delay Time	V_{DD} = 400 V, I_D = 5.0 A, V_{GS} = 10 V, R_g = 12 Ω (Note 4)		15		ns
t_r	Turn-On Rise Time			6.7		ns
$t_{d(off)}$	Turn-Off Delay Time			45		ns
t_f	Turn-Off Fall Time			7		ns
SOURCE-DRAIN DIODE CHARACTERISTICS						
I_S	Maximum Continuous Source to Drain Diode Forward Current				10	A
I_{SM}	Maximum Pulsed Source to Drain Diode Forward Current				28	A
V_{SD}	Source to Drain Diode Forward Voltage	V_{GS} = 0 V, I_{SD} = 5.0 A			1.2	V
t_{rr}	Reverse Recovery Time	V_{DD} = 400 V, I_{SD} = 5.0 A, dI_F/dt = 100 A/μs		204		ns
Q_{rr}	Reverse Recovery Charge			1.9		μC

Product parametric performance is indicated in the Electrical Characteristics for the listed test conditions, unless otherwise noted. Product performance may not be indicated by the Electrical Characteristics if operated under different conditions.

4. Essentially independent of operating temperature typical characteristics.

chanhvinh.com

TYPICAL CHARACTERISTICS

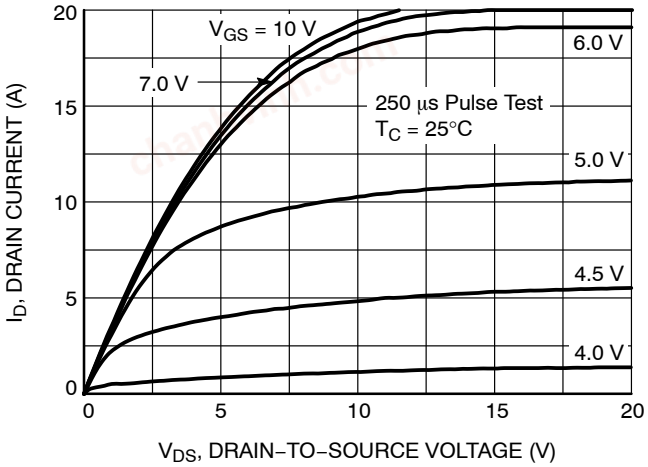

Figure 1. On−Region Characteristics

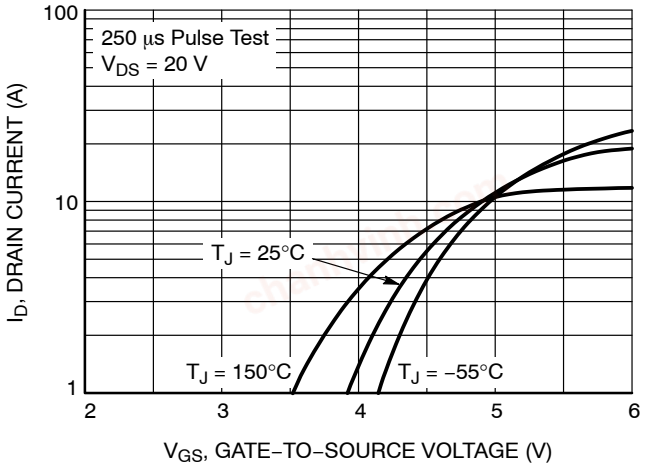

Figure 2. Transfer Characteristics

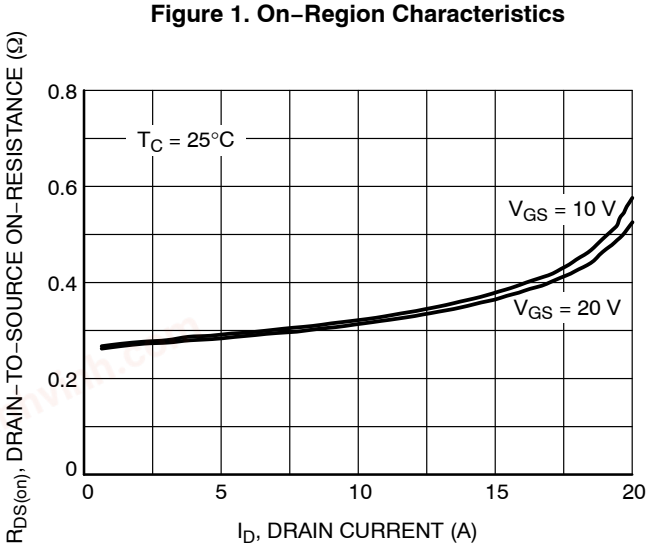

Figure 3. On Resistance Variation vs. Drain Current and Gate Voltage

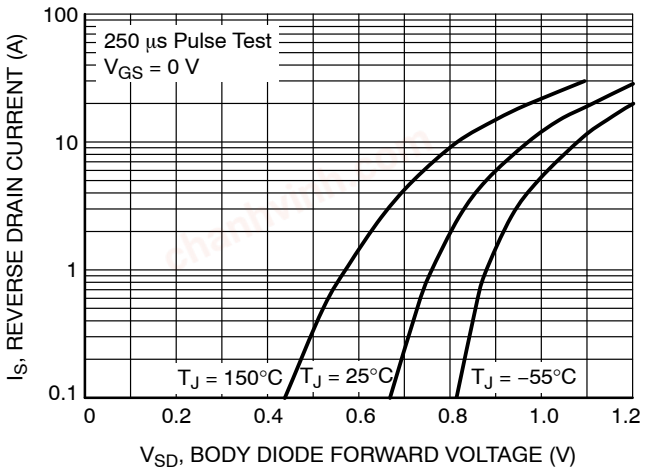

Figure 4. Diode Forward Voltage Variation vs. Source Current and Temperature

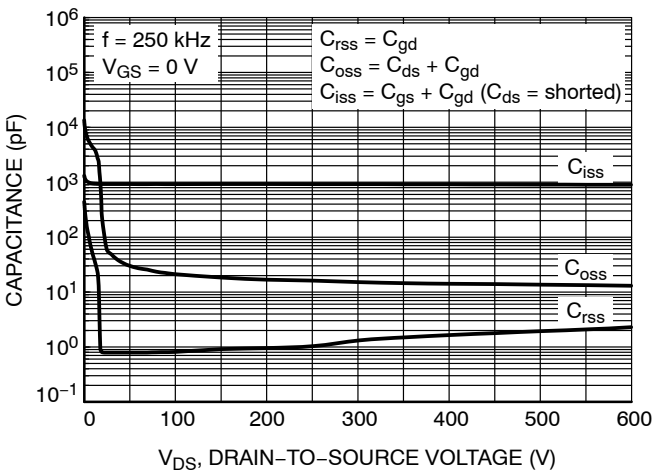

Figure 5. Capacitance Characteristics

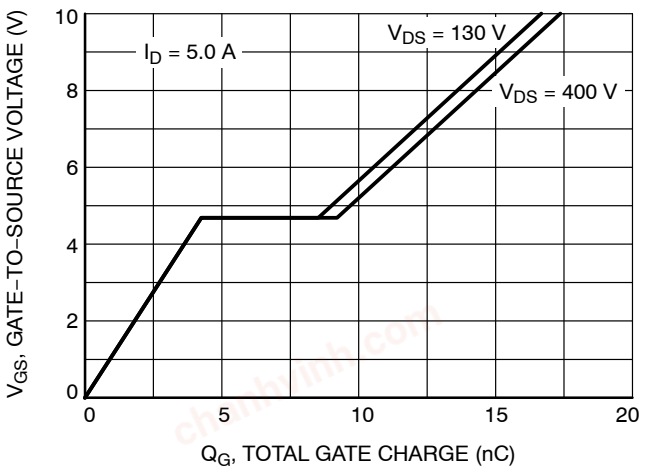

Figure 6. Gate Charge Characteristics

chanhvinh.com

TYPICAL CHARACTERISTICS

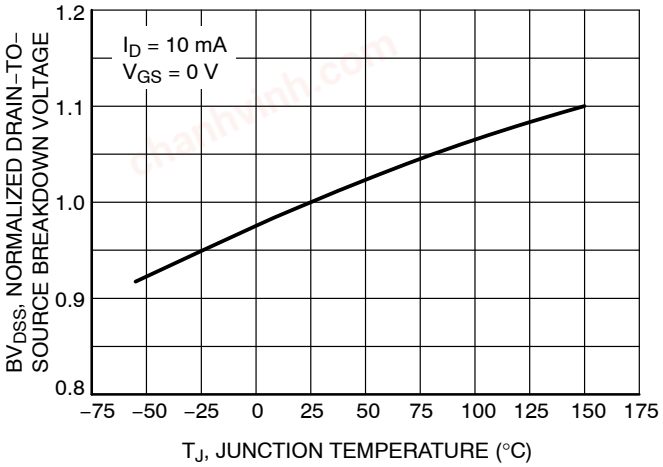

Figure 7. Breakdown Voltage Variation vs. Temperature

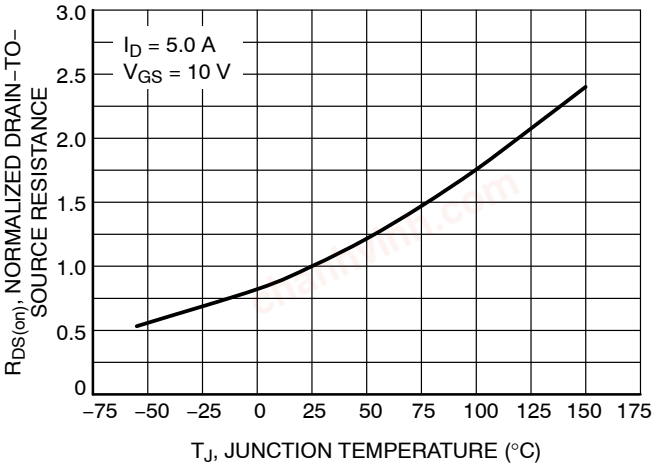

Figure 8. On−Resistance Variation vs. Temperature

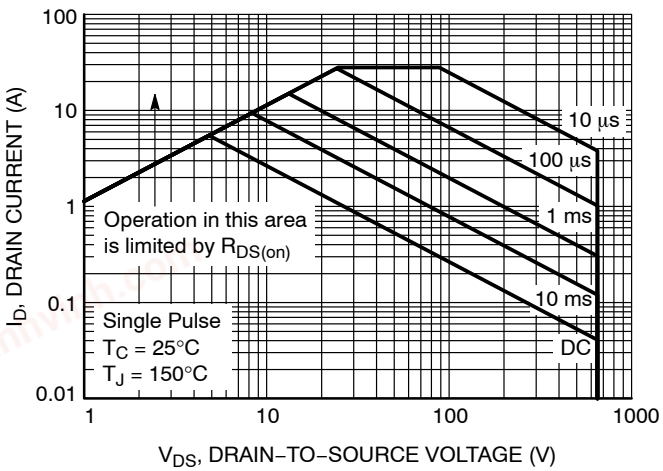

Figure 9. Maximum Safe Operating Area

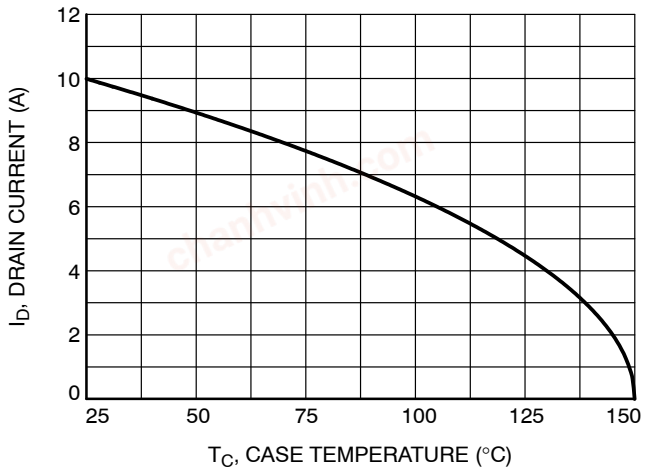

Figure 10. Maximum Drain Current vs. Case Temperature

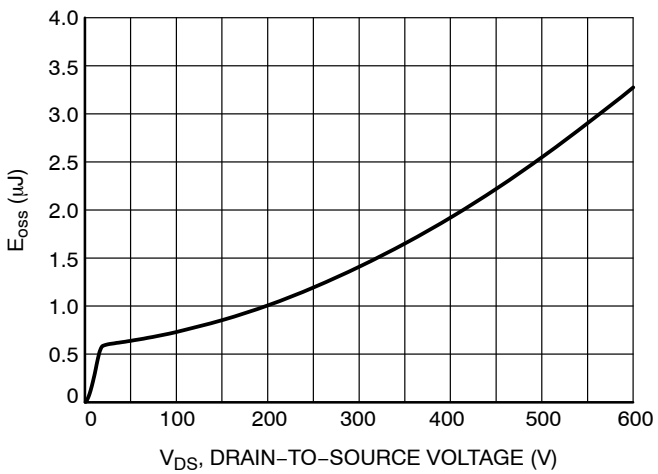

Figure 11. E_{oss} vs. Drain−to−Source Voltage

chanhvinh.com

TYPICAL CHARACTERISTICS

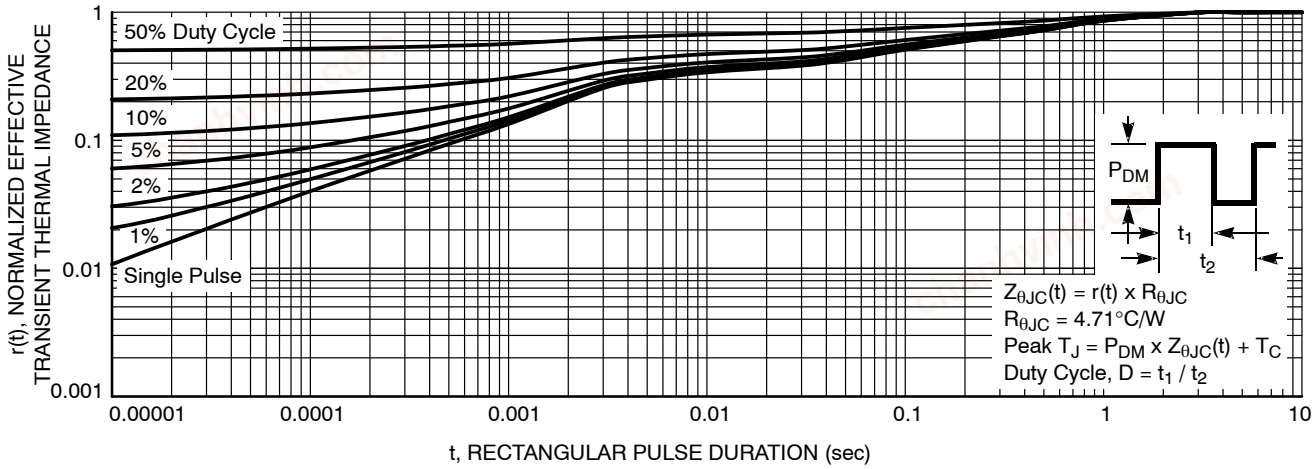

Figure 12. Transient Thermal Response Curve

chanhvinh.com

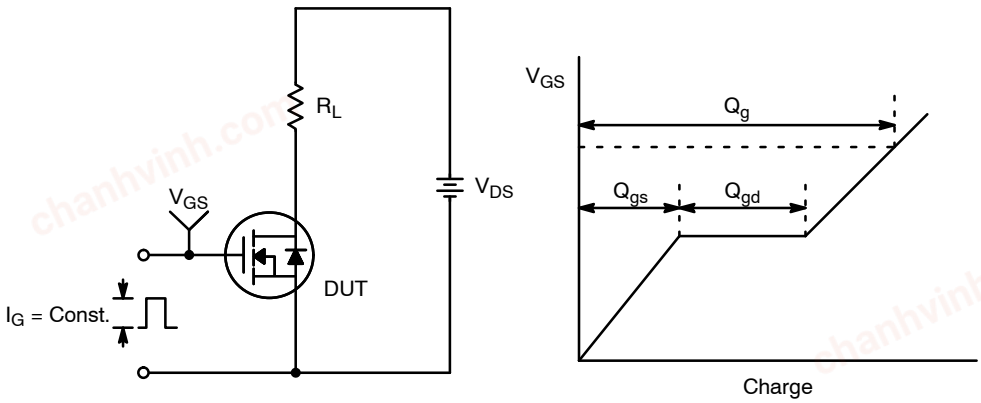

Figure 13. Gate Charge Test Circuit & Waveform

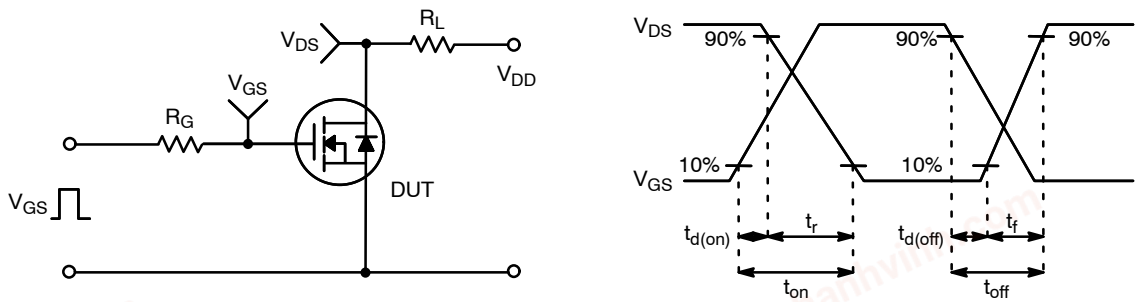

Figure 14. Resistive Switching Test Circuit & Waveforms

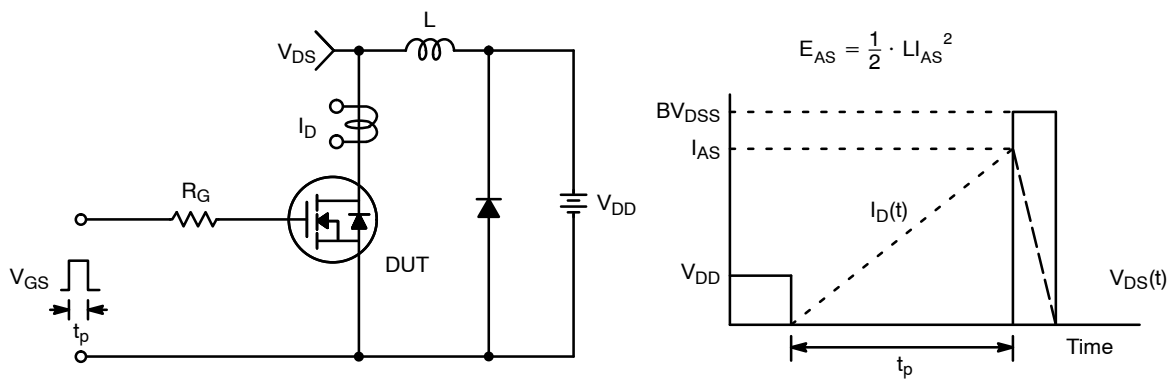

Figure 15. Unclamped Inductive Switching Test Circuit & Waveforms

chanhvinh.com

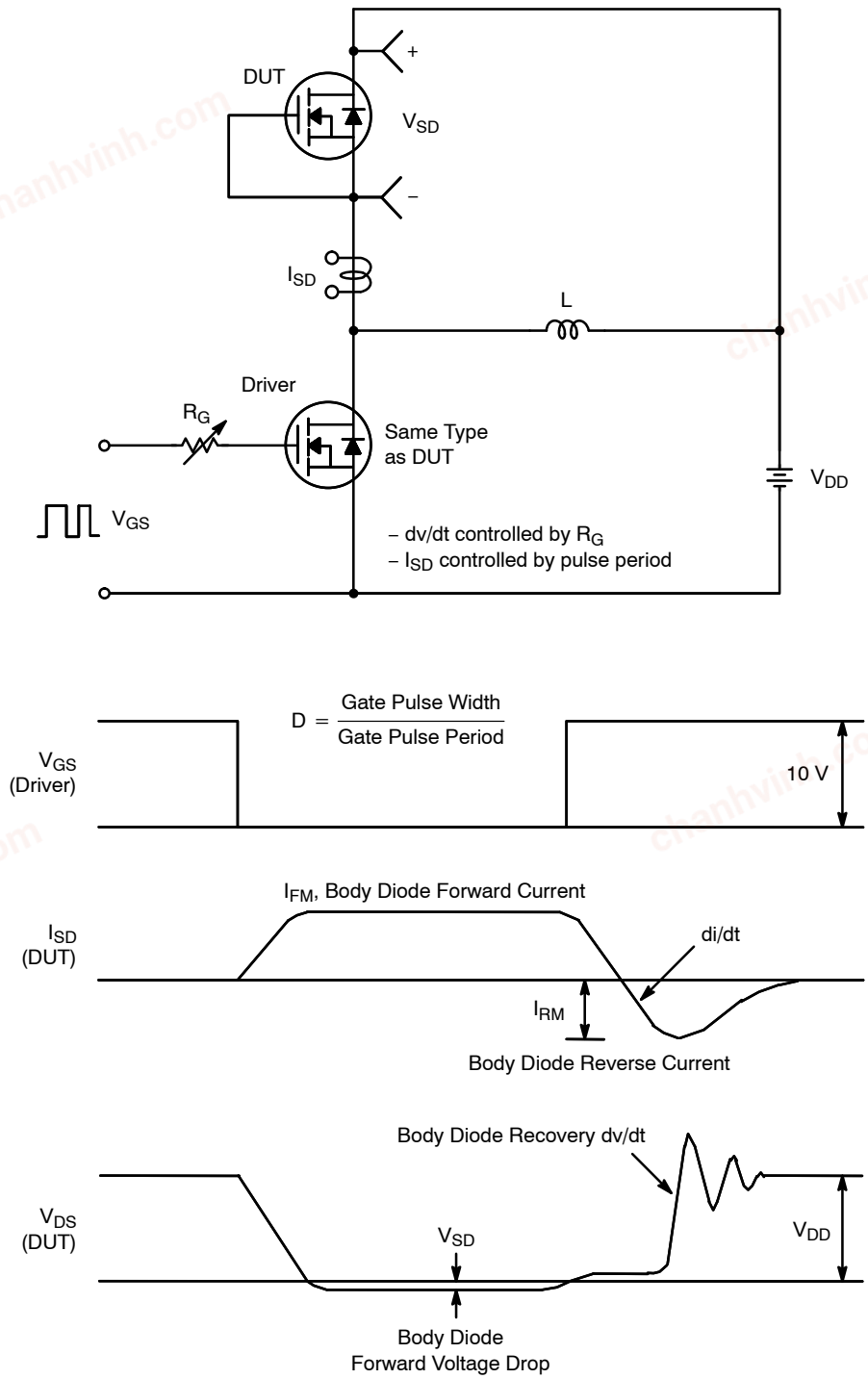

Figure 16. Peak Diode Recovery dv/dt Test Circuit & Waveforms

SUPERFET is a registered trademark of Semiconductor Components Industries, LLC (SCILLC) or its subsidiaries in the United States and/or other countries.

chanhvinh.com

NTPF360N65S3H

PACKAGE DIMENSIONS

TO−220 FULLPAK
CASE 221D−03
ISSUE K

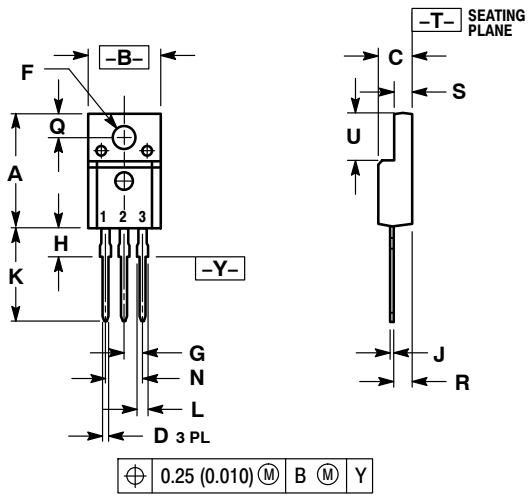

NOTES:
1. DIMENSIONING AND TOLERANCING PER ANSI Y14.5M, 1982.
2. CONTROLLING DIMENSION: INCH
3. 221D−01 THRU 221D−02 OBSOLETE, NEW STANDARD 221D−03.

	INCHES		MILLIMETERS	
DIM	MIN	MAX	MIN	MAX
A	0.617	0.635	15.67	16.12
B	0.392	0.419	9.96	10.63
C	0.177	0.193	4.50	4.90
D	0.024	0.039	0.60	1.00
F	0.116	0.129	2.95	3.28
G	0.100 BSC		2.54 BSC	
H	0.118	0.135	3.00	3.43
J	0.018	0.025	0.45	0.63
K	0.503	0.541	12.78	13.73
L	0.048	0.058	1.23	1.47
N	0.200 BSC		5.08 BSC	
Q	0.122	0.138	3.10	3.50
R	0.099	0.117	2.51	2.96
S	0.092	0.113	2.34	2.87
U	0.239	0.271	6.06	6.88

ON Semiconductor and ON are trademarks of Semiconductor Components Industries, LLC dba ON Semiconductor or its subsidiaries in the United States and/or other countries. ON Semiconductor owns the rights to a number of patents, trademarks, copyrights, trade secrets, and other intellectual property. A listing of ON Semiconductor's product/patent coverage may be accessed at www.onsemi.com/site/pdf/Patent−Marking.pdf. ON Semiconductor reserves the right to make changes without further notice to any products herein. ON Semiconductor makes no warranty, representation or guarantee regarding the suitability of its products for any particular purpose, nor does ON Semiconductor assume any liability arising out of the application or use of any product or circuit, and specifically disclaims any and all liability, including without limitation special, consequential or incidental damages. Buyer is responsible for its products and applications using ON Semiconductor products, including compliance with all laws, regulations and safety requirements or standards, regardless of any support or applications information provided by ON Semiconductor. "Typical" parameters which may be provided in ON Semiconductor data sheets and/or specifications can and do vary in different applications and actual performance may vary over time. All operating parameters, including "Typicals" must be validated for each customer application by customer's technical experts. ON Semiconductor does not convey any license under its patent rights nor the rights of others. ON Semiconductor products are not designed, intended, or authorized for use as a critical component in life support systems or any FDA Class 3 medical devices or medical devices with a same or similar classification in a foreign jurisdiction or any devices intended for implantation in the human body. Should Buyer purchase or use ON Semiconductor products for any such unintended or unauthorized application, Buyer shall indemnify and hold ON Semiconductor and its officers, employees, subsidiaries, affiliates, and distributors harmless against all claims, costs, damages, and expenses, and reasonable attorney fees arising out of, directly or indirectly, any claim of personal injury or death associated with such unintended or unauthorized use, even if such claim alleges that ON Semiconductor was negligent regarding the design or manufacture of the part. ON Semiconductor is an Equal Opportunity/Affirmative Action Employer. This literature is subject to all applicable copyright laws and is not for resale in any manner.

PUBLICATION ORDERING INFORMATION

LITERATURE FULFILLMENT:
Email Requests to: orderlit@onsemi.com

ON Semiconductor Website: www.onsemi.com

TECHNICAL SUPPORT
North American Technical Support:
Voice Mail: 1 800−282−9855 Toll Free USA/Canada
Phone: 011 421 33 790 2910

Europe, Middle East and Africa Technical Support:
Phone: 00421 33 790 2910
For additional information, please contact your local Sales Representative

◊