chanhvinh.com

MOSFET - Power, N-Channel, SUPERFET® III, FAST

650 V, 250 mΩ, 13 A

NTD250N65S3H

ON Semiconductor®

www.onsemi.com

V_{DSS}	$R_{DS(ON)}$ MAX	I_D MAX
650 V	250 mΩ @ 10 V	13 A

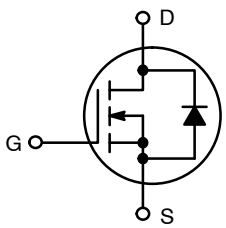

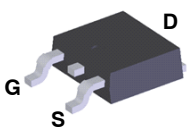

D–PAK
CASE 369AS

Description

SUPERFET III MOSFET is ON Semiconductor's brand-new high voltage super-junction (SJ) MOSFET family that is utilizing charge balance technology for outstanding low on-resistance and lower gate charge performance. This advanced technology is tailored to minimize conduction loss, provides superior switching performance, and withstand extreme dv/dt rate.

Consequently, SUPERFET III FAST MOSFET series helps minimize various power systems and improve system efficiency.

Features

- 700 V @ T_J = 150°C
- Typ. $R_{DS(on)}$ = 201 mΩ
- Ultra Low Gate Charge (Typ. Q_g = 24 nC)
- Low Effective Output Capacitance (Typ. $C_{oss(eff.)}$ = 229 pF)
- 100% Avalanche Tested
- These Devices are Pb–Free and are RoHS Compliant

Applications

- Computing / Display Power Supplies
- Telecom / Server Power Supplies
- Industrial Power Supplies
- Lighting / Charger / Adapter

MARKING DIAGRAM

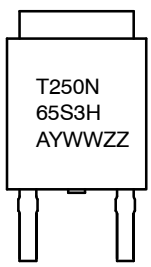

T250N65S3H = Specific Device Code
A = Assembly Location
Y = Year
WW = Work Week
ZZ = Lot Code

ORDERING INFORMATION

See detailed ordering and shipping information on page 2 of this data sheet.

© Semiconductor Components Industries, LLC, 2020

chanhvinh.com

ABSOLUTE MAXIMUM RATINGS (T_C = 25°C, Unless otherwise specified)

Symbol	Parameter		Value	Unit
V_{DSS}	Drain to Source Voltage		650	V
V_{GSS}	Gate to Source Voltage	DC	±30	V
		AC (f > 1 Hz)	±30	V
I_D	Drain Current	Continuous (T_C = 25°C)	13	A
		Continuous (T_C = 100°C)	8	
I_{DM}	Drain Current	Pulsed (Note 1)	36	A
E_{AS}	Single Pulsed Avalanche Energy (Note 2)		108	mJ
I_{AS}	Avalanche Current (Note 2)		2.9	A
E_{AR}	Repetitive Avalanche Energy (Note 1)		1.06	mJ
dv/dt	MOSFET dv/dt		120	V/ns
	Peak Diode Recovery dv/dt (Note 3)		20	
P_D	Power Dissipation	(T_C = 25°C)	106	W
		Derate Above 25°C	0.85	W/°C
T_J, T_{STG}	Operating and Storage Temperature Range		−55 to +150	°C
T_L	Maximum Lead Temperature for Soldering, 1/8″ from Case for 5 s		260	°C

Stresses exceeding those listed in the Maximum Ratings table may damage the device. If any of these limits are exceeded, device functionality should not be assumed, damage may occur and reliability may be affected.

1. Repetitive rating: pulse-width limited by maximum junction temperature.
2. I_{AS} = 2.9 A, R_G = 25 Ω, starting T_J = 25°C.
3. I_{SD} ≤ 6.5 A, di/dt ≤ 200 A/μs, V_{DD} ≤ 400 V, starting T_J = 25°C.

THERMAL CHARACTERISTICS

Symbol	Parameter	Value	Unit
$R_{\theta JC}$	Thermal Resistance, Junction to Case, Max.	1.18	°C/W
$R_{\theta JA}$	Thermal Resistance, Junction to Ambient, Max. (Note 4)	40	

4. Device on 1 in^2 pad 2 oz copper pad on 1.5 x 1.5 in. board of FR−4 material.

PACKAGE MARKING AND ORDERING INFORMATION

Part Number	Top Marking	Package	Reel Size	Tape Width	Shipping†
NTD250N65S3H	T250N65S3H	D−PAK	330 mm	16 mm	2500 / Tape & Reel

†For information on tape and reel specifications, including part orientation and tape sizes, please refer to our Tape and Reel Packaging Specifications Brochure, BRD8011/D.

chanhvinh.com

ELECTRICAL CHARACTERISTICS (T_C = 25°C unless otherwise noted)

Symbol	Parameter	Test Conditions	Min	Typ	Max	Unit
OFF CHARACTERISTICS						
BV_{DSS}	Drain to Source Breakdown Voltage	V_{GS} = 0 V, I_D = 1 mA, T_J = 25°C	650			V
		V_{GS} = 0 V, I_D = 1 mA, T_J = 150°C	700			V
$\Delta BV_{DSS}/\Delta T_J$	Breakdown Voltage Temperature Coefficient	I_D = 10 mA, Referenced to 25°C		0.63		V/°C
I_{DSS}	Zero Gate Voltage Drain Current	V_{DS} = 650 V, V_{GS} = 0 V			3	μA
		V_{DS} = 520 V, T_C = 125°C		0.7		
I_{GSS}	Gate to Body Leakage Current	V_{GS} = ±30 V, V_{DS} = 0 V			±100	nA
ON CHARACTERISTICS						
$V_{GS(th)}$	Gate Threshold Voltage	V_{GS} = V_{DS}, I_D = 1.1 mA	2.4		4.0	V
$R_{DS(on)}$	Static Drain to Source On Resistance	V_{GS} = 10 V, I_D = 6.5 A		201	250	mΩ
g_{FS}	Forward Transconductance	V_{DS} = 20 V, I_D = 6.5 A		14		S
DYNAMIC CHARACTERISTICS						
C_{iss}	Input Capacitance	V_{DS} = 400 V, V_{GS} = 0 V, f = 250 kHz		1261		pF
C_{oss}	Output Capacitance			19		pF
$C_{oss(eff.)}$	Effective Output Capacitance	V_{DS} = 0 V to 400 V, V_{GS} = 0 V		229		pF
$C_{oss(er.)}$	Energy Related Output Capacitance	V_{DS} = 0 V to 400 V, V_{GS} = 0 V		33		pF
$Q_{g(tot)}$	Total Gate Charge at 10 V	V_{DS} = 400 V, I_D = 6.5 A, V_{GS} = 10 V (Note 5)		24		nC
Q_{gs}	Gate to Source Gate Charge			5.9		nC
Q_{gd}	Gate to Drain “Miller” Charge			6.8		nC
ESR	Equivalent Series Resistance	f = 1 MHz		0.9		Ω
SWITCHING CHARACTERISTICS						
$t_{d(on)}$	Turn-On Delay Time	V_{DD} = 400 V, I_D = 6.5 A, V_{GS} = 10 V, R_g = 12 Ω (Note 5)		18		ns
t_r	Turn-On Rise Time			8.2		ns
$t_{d(off)}$	Turn-Off Delay Time			54		ns
t_f	Turn-Off Fall Time			4.2		ns
SOURCE-DRAIN DIODE CHARACTERISTICS						
I_S	Maximum Continuous Source to Drain Diode Forward Current				13	A
I_{SM}	Maximum Pulsed Source to Drain Diode Forward Current				36	A
V_{SD}	Source to Drain Diode Forward Voltage	V_{GS} = 0 V, I_{SD} = 6.5 A			1.2	V
t_{rr}	Reverse Recovery Time	V_{DD} = 400 V, I_{SD} = 6.5 A, dI_F/dt = 100 A/μs		233		ns
Q_{rr}	Reverse Recovery Charge			2.5		μC

Product parametric performance is indicated in the Electrical Characteristics for the listed test conditions, unless otherwise noted. Product performance may not be indicated by the Electrical Characteristics if operated under different conditions.

5. Essentially independent of operating temperature typical characteristics.

chanhvinh.com

TYPICAL CHARACTERISTICS

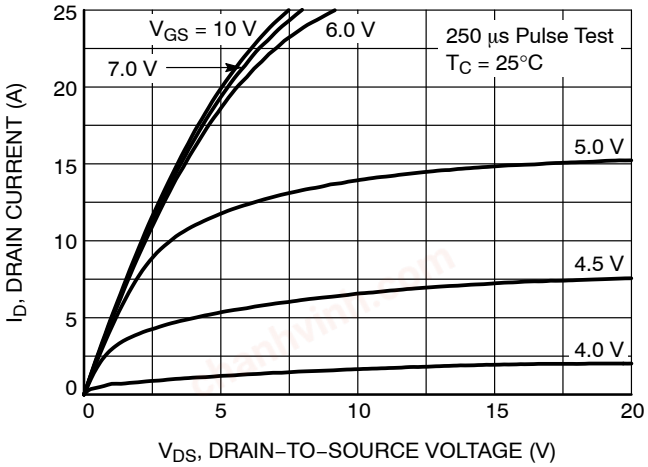

Figure 1. On−Region Characteristics

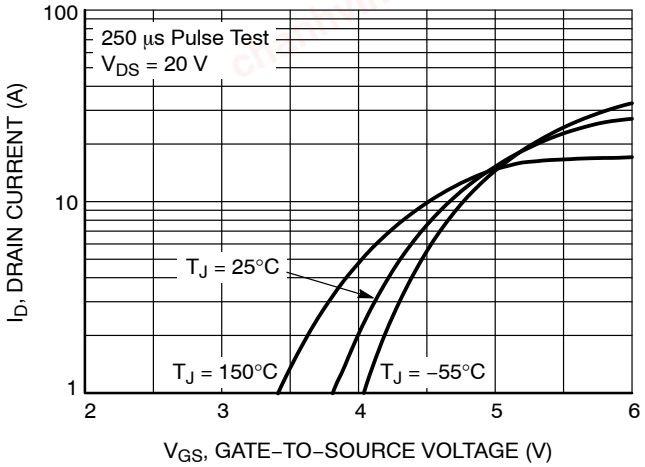

Figure 2. Transfer Characteristics

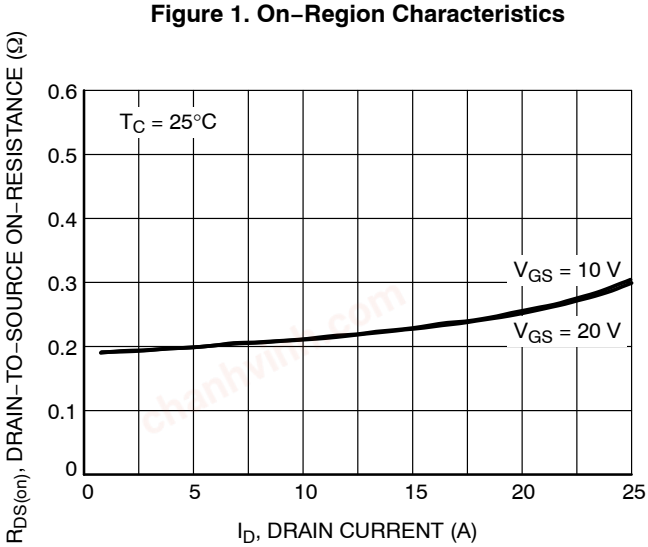

Figure 3. On Resistance Variation vs. Drain Current and Gate Voltage

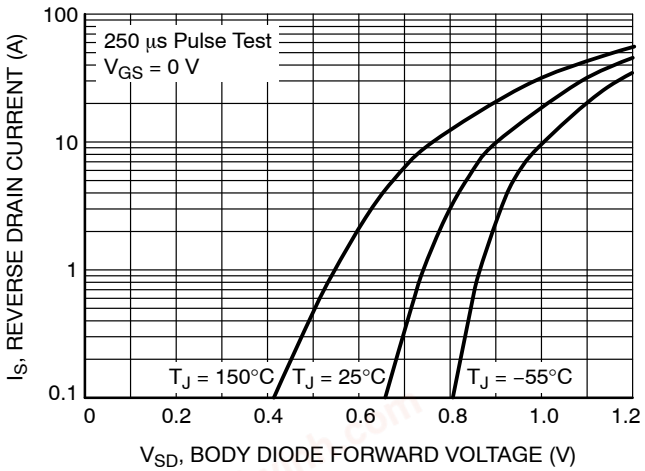

Figure 4. Diode Forward Voltage Variation vs. Source Current and Temperature

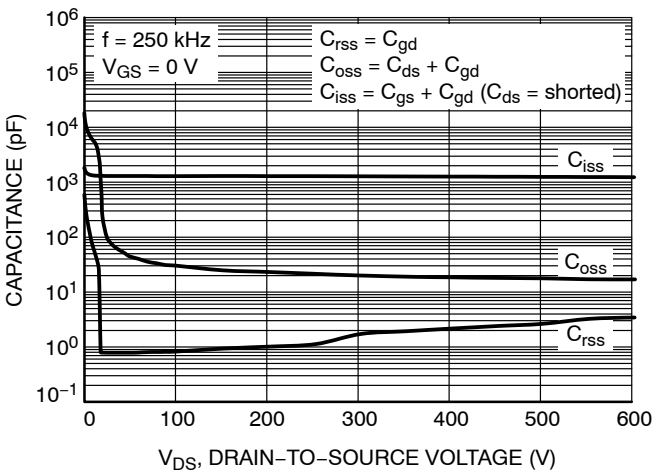

Figure 5. Capacitance Characteristics

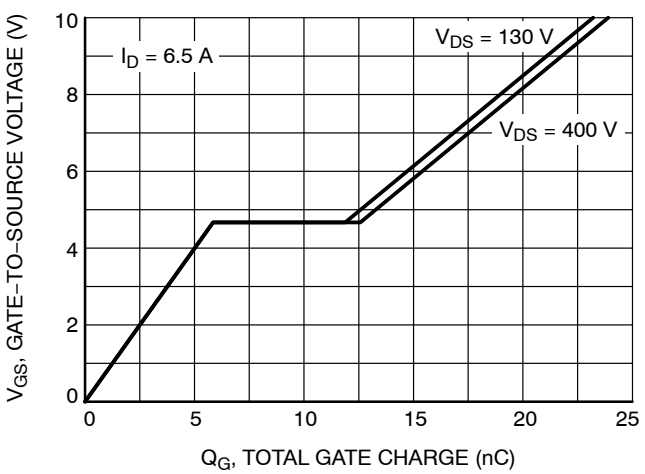

Figure 6. Gate Charge Characteristics

chanhvinh.com

TYPICAL CHARACTERISTICS

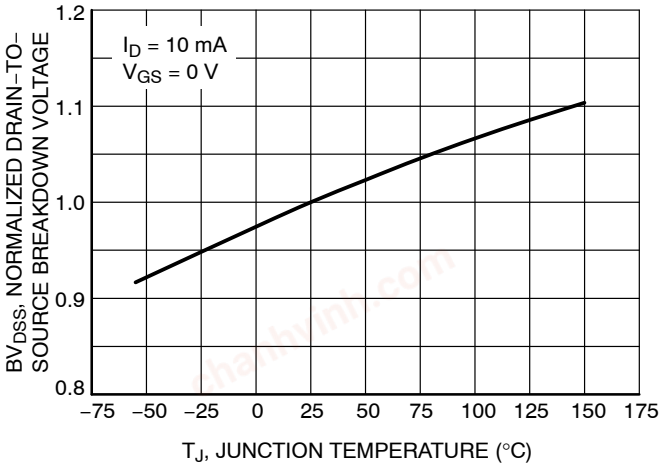

Figure 7. Breakdown Voltage Variation vs. Temperature

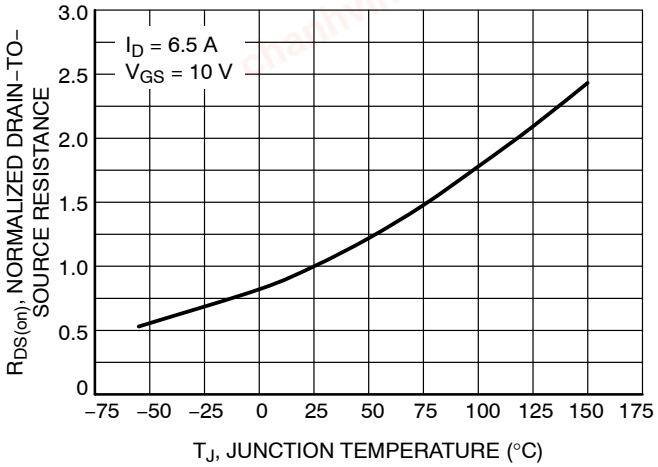

Figure 8. On−Resistance Variation vs. Temperature

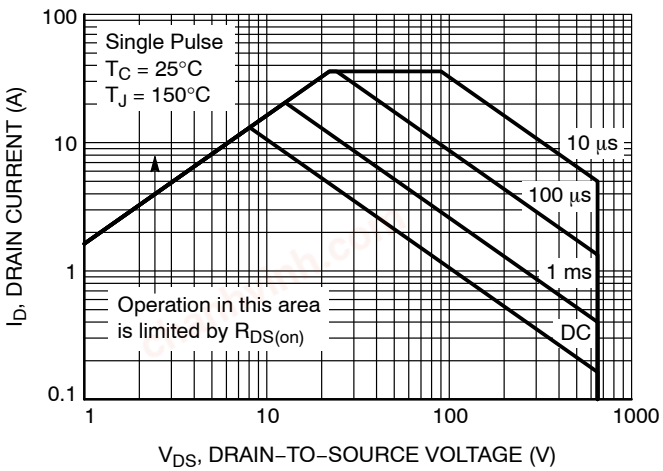

Figure 9. Maximum Safe Operating Area

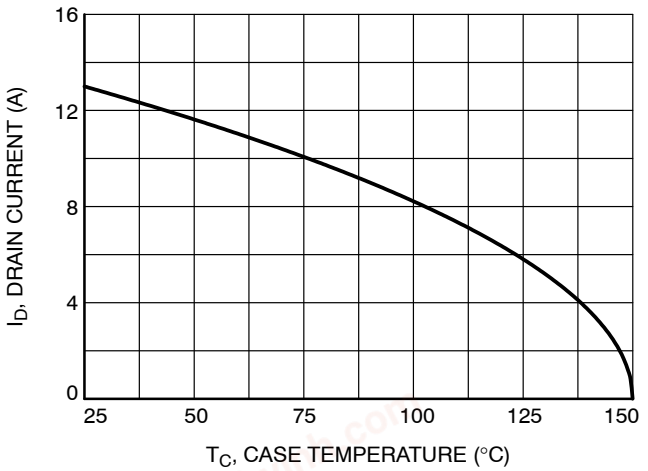

Figure 10. Maximum Drain Current vs. Case Temperature

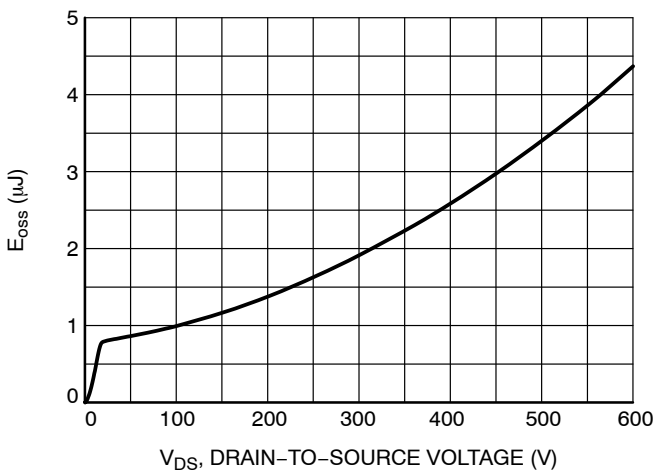

Figure 11. E_{oss} vs. Drain−to−Source Voltage

chanhvinh.com

TYPICAL CHARACTERISTICS

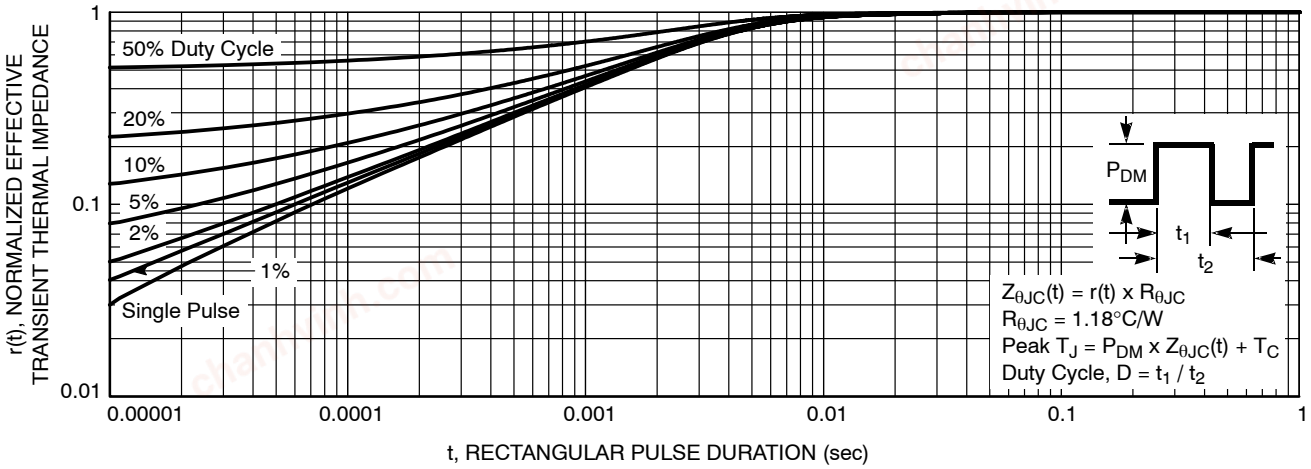

Figure 12. Transient Thermal Response Curve

chanhvinh.com

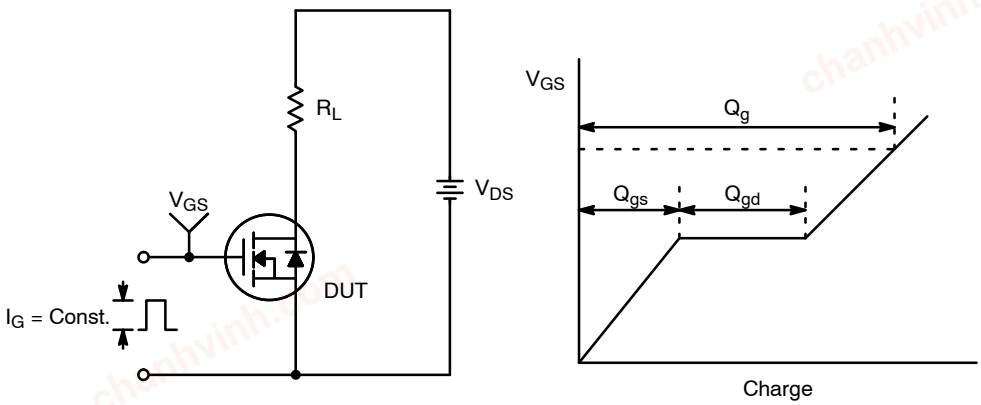

Figure 13. Gate Charge Test Circuit & Waveform

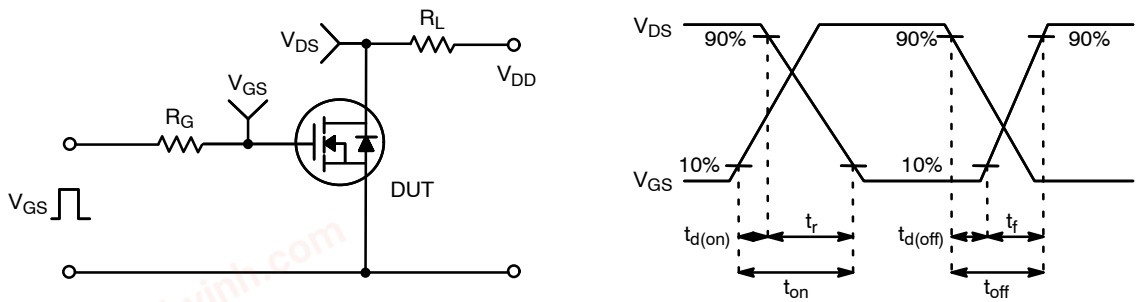

Figure 14. Resistive Switching Test Circuit & Waveforms

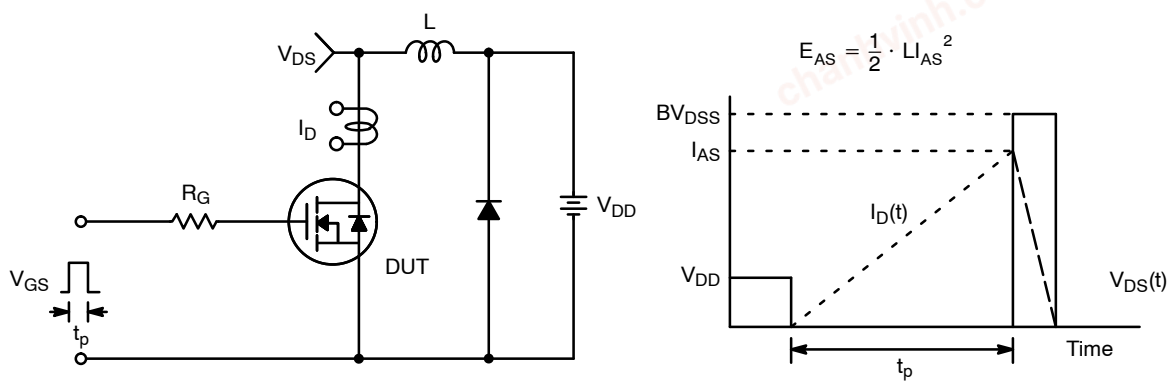

Figure 15. Unclamped Inductive Switching Test Circuit & Waveforms

chanhvinh.com

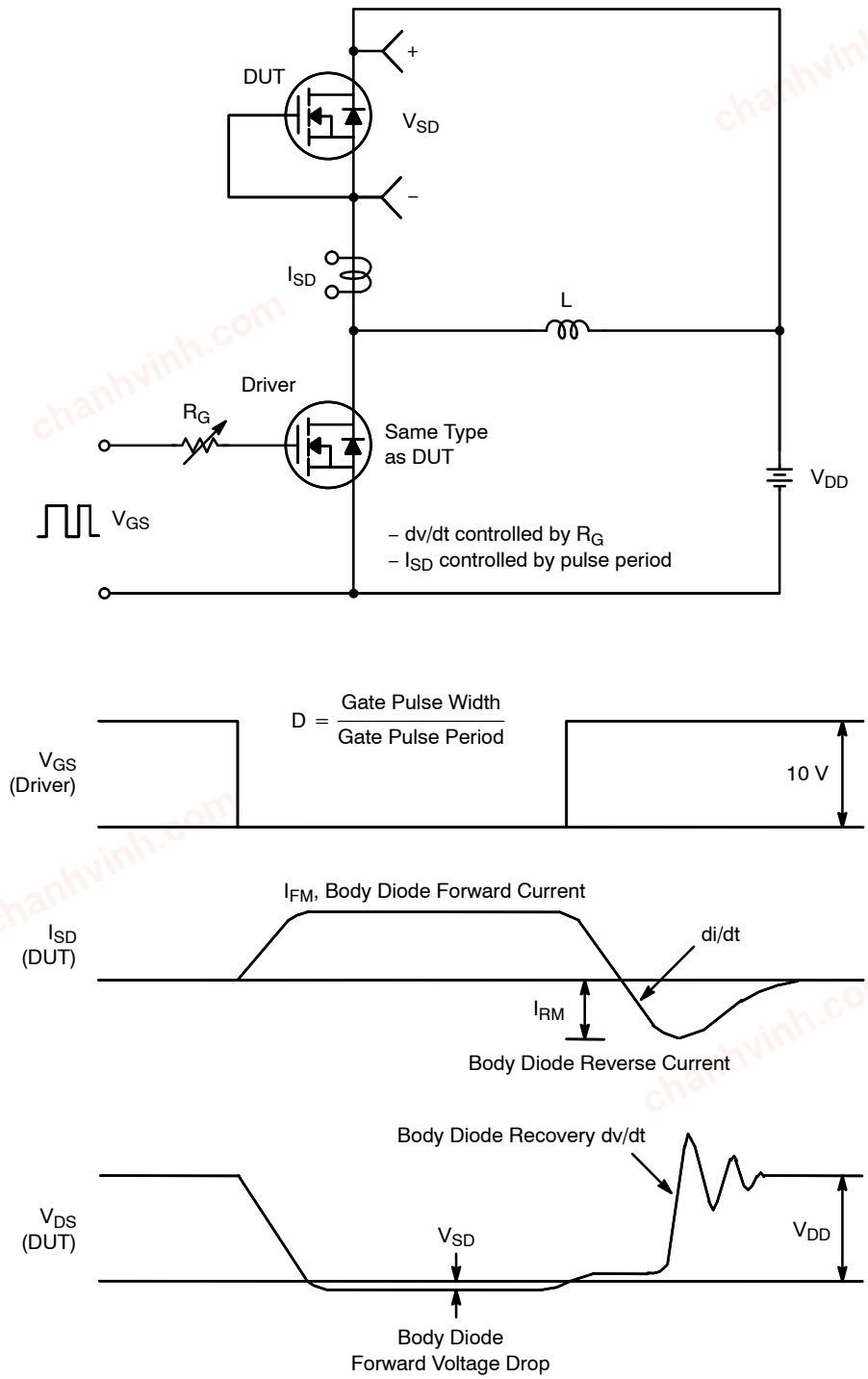

Figure 16. Peak Diode Recovery dv/dt Test Circuit & Waveforms

SUPERFET is a registered trademark of Semiconductor Components Industries, LLC (SCILLC) or its subsidiaries in the United States and/or other countries.

chanhvinh.com

NTD250N65S3H

PACKAGE DIMENSIONS

DPAK3 (TO−252 3 LD)
CASE 369AS
ISSUE O

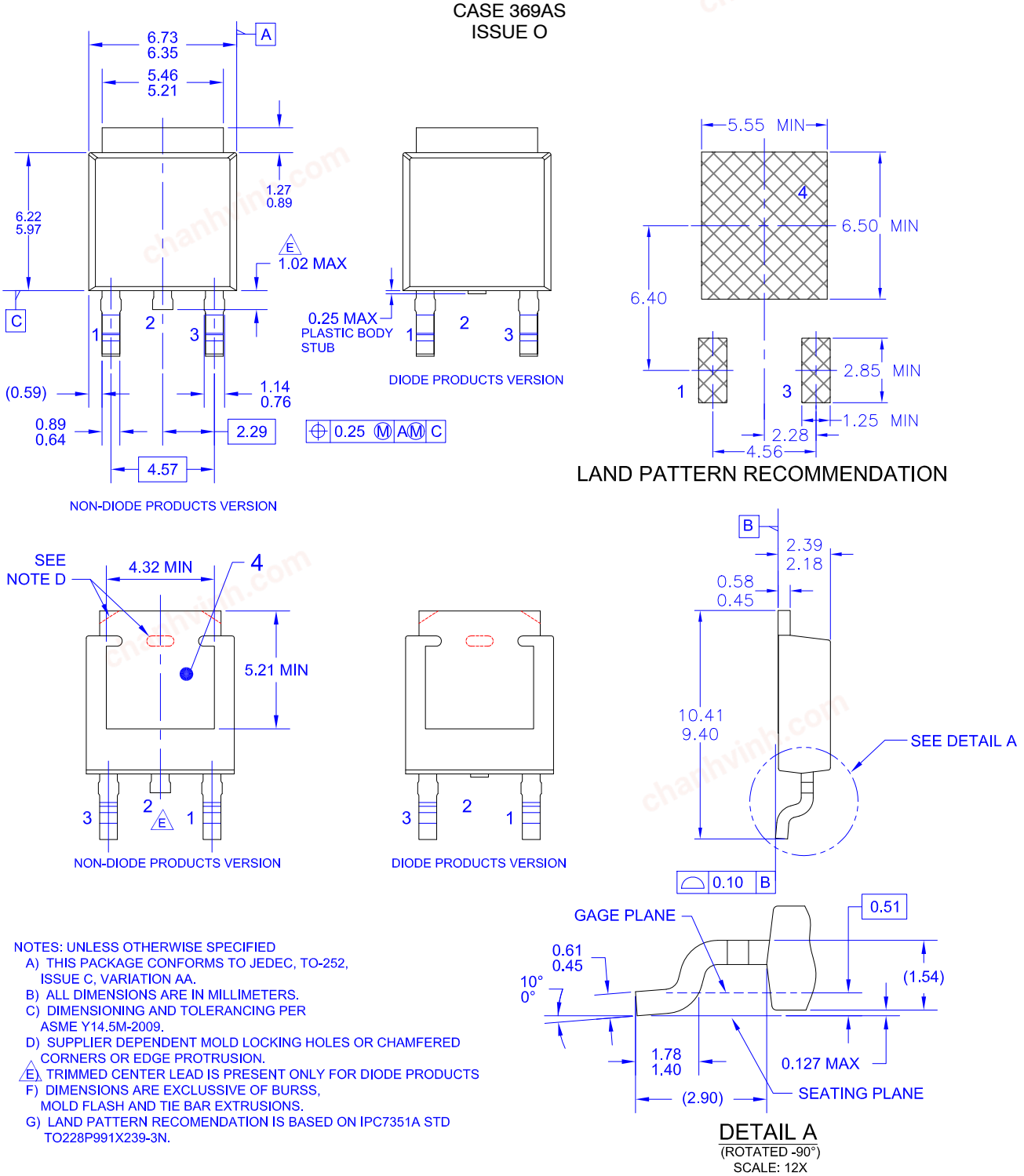

NOTES: UNLESS OTHERWISE SPECIFIED
A) THIS PACKAGE CONFORMS TO JEDEC, TO-252, ISSUE C, VARIATION AA.
B) ALL DIMENSIONS ARE IN MILLIMETERS.
C) DIMENSIONING AND TOLERANCING PER ASME Y14.5M-2009.
D) SUPPLIER DEPENDENT MOLD LOCKING HOLES OR CHAMFERED CORNERS OR EDGE PROTRUSION.
E) TRIMMED CENTER LEAD IS PRESENT ONLY FOR DIODE PRODUCTS
F) DIMENSIONS ARE EXCLUSSIVE OF BURSS, MOLD FLASH AND TIE BAR EXTRUSIONS.
G) LAND PATTERN RECOMENDATION IS BASED ON IPC7351A STD TO228P991X239-3N.

chanhvinh.com

NTD250N65S3H

ON Semiconductor and ON are trademarks of Semiconductor Components Industries, LLC dba ON Semiconductor or its subsidiaries in the United States and/or other countries. ON Semiconductor owns the rights to a number of patents, trademarks, copyrights, trade secrets, and other intellectual property. A listing of ON Semiconductor's product/patent coverage may be accessed at www.onsemi.com/site/pdf/Patent−Marking.pdf. ON Semiconductor reserves the right to make changes without further notice to any products herein. ON Semiconductor makes no warranty, representation or guarantee regarding the suitability of its products for any particular purpose, nor does ON Semiconductor assume any liability arising out of the application or use of any product or circuit, and specifically disclaims any and all liability, including without limitation special, consequential or incidental damages. Buyer is responsible for its products and applications using ON Semiconductor products, including compliance with all laws, regulations and safety requirements or standards, regardless of any support or applications information provided by ON Semiconductor. "Typical" parameters which may be provided in ON Semiconductor data sheets and/or specifications can and do vary in different applications and actual performance may vary over time. All operating parameters, including "Typicals" must be validated for each customer application by customer's technical experts. ON Semiconductor does not convey any license under its patent rights nor the rights of others. ON Semiconductor products are not designed, intended, or authorized for use as a critical component in life support systems or any FDA Class 3 medical devices or medical devices with a same or similar classification in a foreign jurisdiction or any devices intended for implantation in the human body. Should Buyer purchase or use ON Semiconductor products for any such unintended or unauthorized application, Buyer shall indemnify and hold ON Semiconductor and its officers, employees, subsidiaries, affiliates, and distributors harmless against all claims, costs, damages, and expenses, and reasonable attorney fees arising out of, directly or indirectly, any claim of personal injury or death associated with such unintended or unauthorized use, even if such claim alleges that ON Semiconductor was negligent regarding the design or manufacture of the part. ON Semiconductor is an Equal Opportunity/Affirmative Action Employer. This literature is subject to all applicable copyright laws and is not for resale in any manner.

PUBLICATION ORDERING INFORMATION

LITERATURE FULFILLMENT:
Email Requests to: orderlit@onsemi.com

ON Semiconductor Website: www.onsemi.com

TECHNICAL SUPPORT
North American Technical Support:
Voice Mail: 1 800−282−9855 Toll Free USA/Canada
Phone: 011 421 33 790 2910

Europe, Middle East and Africa Technical Support:
Phone: 00421 33 790 2910
For additional information, please contact your local Sales Representative

◊