chanhvinh.com

NCP45780

Advance Information

ecoSwitch™ Advanced Load Management

Controlled Load Switch with Reverse Current Protection and Low R_{ON}

The NCP45780 load management device provides a component and area−reducing solution for efficient power domain switching with inrush current limit via soft start. This device is designed to integrate control and driver functionality with back−to−back high performance low on−resistance power MOSFETs in a single package. This cost effective solution is ideal for reverse current applications and the specific power management and disconnect functions used in USB Type−C and Type−C Power Delivery ports.

Features

- Advanced Controller with Charge Pump
- Integrated N−Channel MOSFET with Low R_{ON}
- Soft−Start via Controlled Slew Rate
- Adjustable Slew Rate Control
- Fault Detection with Power Good Output
- Thermal Shutdown and Under Voltage Lockout
- Short−Circuit and Adjustable Over−Current Protections
- Reverse−current Protection Option
- Input Voltage Range 3 V to 24 V
- Extremely Low Standby Current
- This is a Pb−free, RoHS/REACH Compliant Device

Typical Applications

- USB Type C Power Delivery
- Reverse Current Load Switching Applications
- Servers, Set−Top Boxes and Gateways
- Notebook and Tablet Computers
- Telecom, Networking, Medical and Industrial Equipment
- Hot−Swap Devices and Peripheral Ports

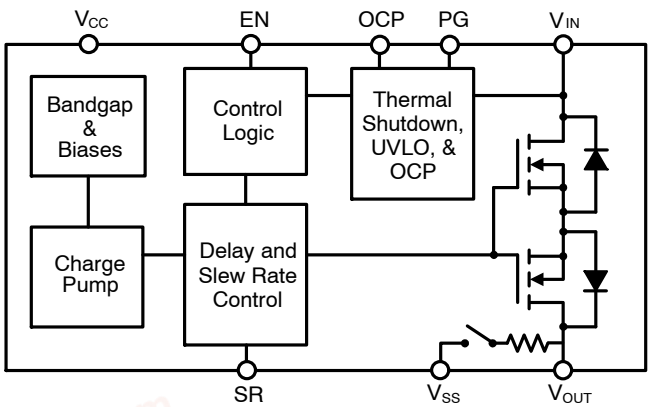

Figure 1. Block Diagram

This document contains information on a new product. Specifications and information herein are subject to change without notice.

ON Semiconductor®

www.onsemi.com

R_{ON} TYP	V_{CC}	V_{IN}	I_{MAX}
8.8 mΩ	4.5 V	3.0 V	12.5 A
8.8 mΩ	3.3 V	4.5 V	
8.8 mΩ	3.3 V	15 V	
8.8 mΩ	3.3 V	24 V	



1

DFN12, 3x3
CASE 506EN

MARKING DIAGRAM

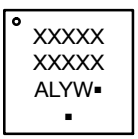

XXXX = Specific Device Code
A = Assembly Location
L = Wafer Lot
Y = Year
W = Work Week
▪ = Pb−Free Package

(Note: Microdot may be in either location)

PIN CONFIGURATION

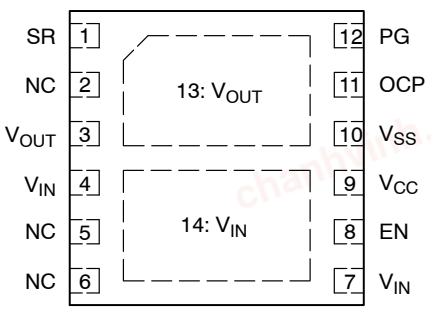

(Top View)

ORDERING INFORMATION

Device	Package	Shipping
NCP45780IMN24RTWG	DFN12	TBD

© Semiconductor Components Industries, LLC, 2018

chanhvinh.com

Table 1. PIN DESCRIPTION

Pin	Name	Function
1	SR	Slew Rate control pin. Slew rate adjustment made with an external capacitor to GND; float if not used.
3,13	V_{OUT}	Source of MOSFET connected to load. Includes an internal bleed resistor to GND. – **Pin 16 should be used for high current (>0.5 A)**
4,7,14	V_{IN}	Input voltage (3 V – 24 V) – **Pin 13 should be used for high current (>0.5 A)**
8	EN	Active−high digital input used to turn on the MOSFET driver, pin has an internal pull down resistor to GND.
9	V_{CC}	Driver supply voltage (3.0 V – 5.5 V)
10	V_{SS}	Driver ground
11	OCP	Over−current protection trip point adjustment made with a voltage applied (0 V – 1.2 V), pin has an internal pull up resistor to EN; short to ground if over−current protection is not needed.
12	PG	Active−high, open−drain output that indicates when the gate of the MOSFET is fully charged, external pull up resistor ≥ 100 kΩ to an external voltage source required; tie to GND if not used.

Table 2. ABSOLUTE MAXIMUM RATINGS

Rating	Symbol	Value	Unit
Supply Voltage Range	V_{CC}	−0.3 to 6	V
Input Voltage Range	V_{IN}	−0.3 to 30	V
Output Voltage Range	V_{OUT}	−0.3 to 30	V
EN Input Voltage Range	V_{EN}	GND−0.3 to (V_{CC} + 0.3)	V
PG Output Voltage Range (Note 1)	V_{PG}	−0.3 to 6	V
OCP Input Voltage Range	V_{OCP}	−0.3 to 6	V
Thermal Resistance, Junction−to−Ambient, Steady State (Note 2)	$R_{\theta JA}$	28.6	°C/W
Thermal Resistance, Junction−to−Case (V_{IN} Paddle)	$R_{\theta JC}$	1.7	°C/W
Continuous MOSFET Current @ T_A = 25°C (Note 2)	I_{MAX}	20	A
Total Power Dissipation @ T_A = 25°C (Note 2) Derate above T_A = 25°C	P_D	3.49 34.9	W mW/°C
Storage Temperature Range	T_{STG}	−55 to 150	°C
Lead Temperature, Soldering (10 sec.)	T_{SLD}	260	°C
ESD Capability, Human Body Model (Notes 3 and 4)	ESD_{HBM}	2	kV
ESD Capability, Charged Device Model (Notes 3 and 4)	ESD_{CDM}	1	kV
Latch−up Current Immunity (Note 3)	LU	100	mA

Stresses exceeding those listed in the Maximum Ratings table may damage the device. If any of these limits are exceeded, device functionality should not be assumed, damage may occur and reliability may be affected.

1. PG is an open drain output that requires an external pull−up resistor > 100 kΩ to an external voltage source.
2. Surface−mounted on FR4 board using the minimum recommended pad size, 1 oz Cu. Over current protection will limit maximum realized current to 12.5 A at highest setting.
3. Tested by the following methods @ T_A = 25°C:
   ESD Human Body Model tested per JESD22−A114
   ESD Charged Device Model per ESD STM5.3.1
   Latch−up Current tested per JESD78
4. Rating is for all pins except for V_{IN} and V_{OUT} which are tied to the internal MOSFET's Drain and Source. Typical MOSFET ESD performance for V_{IN} and V_{OUT} should be expected and these devices should be treated as ESD sensitive.

chanhvinh.com

Table 3. OPERATING RANGES

Rating	Symbol	Min	Max	Unit
VCC – (V_{IN} > 4.5 V)	V_{CC}	3	5.5	V
VCC – (V_{IN} < 4.5 V)	V_{CC}	4.5	5.5	V
VIN – (V_{CC} > 4.5 V)	V_{IN}	3	24	V
VIN – (V_{CC} < 4.5 V)	V_{IN}	4.5	24	V
OCP External Resistor to VSS	R_{OCP}	short	open	kΩ
VSS	V_{SS}		0	V
Ambient Temperature	T_A	−40	85	°C
Junction Temperature	T_J	−40	125	°C

Functional operation above the stresses listed in the Recommended Operating Ranges is not implied. Extended exposure to stresses beyond the Recommended Operating Ranges limits may affect device reliability.

Table 4. ELECTRICAL CHARACTERISTICS (T_J = 25°C, V_{CC} = 3 V – 5.5 V, unless otherwise specified)

Parameter	Conditions	Symbol	Min	Typ	Max	Unit
On−Resistance	V_{CC} = 4.5 V; V_{IN} = 3 V	R_{ON}		8.8		mΩ
	V_{CC} = 3.3 V; V_{IN} = 4.5 V			8.8		
	V_{CC} = 3.3 V; V_{IN} = 15 V			8.8		
	V_{CC} = 3.3 V; V_{IN} = 24 V			8.8		
Leakage Current – V_{IN} to V_{OUT} (Note 5)	V_{EN} = 0 V; V_{IN} = 24 V	I_{LEAK}		0.1	1.0	μA
V_{IN} Control Current – V_{IN} to V_{SS}		I_{INCTL}		1.0	2.0	μA
Supply Standby Current (Note 6)	V_{EN} = 0 V	I_{STBY}		10		μA
Supply Dynamic Current (Note 7)	V_{EN} = V_{CC}	I_{DYN}			1.0	mA
Bleed Resistance		R_{BLEED}	75		200	kΩ
EN Input High Voltage		V_{IH}	2			V
EN Input Low Voltage		V_{IL}			0.8	V
EN Input Leakage Current	V_{EN} = 0 V	I_{IL}	−1.0		1	μA
EN Pull Down Resistance		R_{PD}	76	100	124	kΩ
PG Output Low Voltage	I_{SINK} = 5 mA	V_{OL}			0.2	V
PG Output Leakage Current	V_{TERM} = 3.3 V	I_{OH}		5	100	nA
Slew Rate Control Constant (Note 8)		K_{SR}		100		μA
FAULT PROTECTIONS						
Thermal Shutdown Threshold (Note 9)		T_{SDT}		145		°C
Thermal Shutdown Hysteresis (Note 9)		T_{HYS}		20		°C
V_{IN} Under Voltage Lockout Threshold	V_{IN} rising	V_{UVLO}		2		V
V_{IN} Under Voltage Lockout Hysteresis		V_{HYS}		200		mV
Over−Current Protection Trip	R_{OCP} = open	I_{TRIP}		2.5		A
	R_{OCP} = 100 kΩ			5		
	R_{OCP} = 32 kΩ			7.5		
	R_{OCP} = 10.6 kΩ			10.0		
	R_{OCP} = short to GND			12.5		
Over−Current Protection Blanking Time		t_{OCP}	1		3.5	ms
Short−Circuit Protection Trip Current		I_{SC}		12.5		A

5. Average current from V_{IN} to V_{OUT} with MOSFET turned off.
6. Average current from V_{CC} to GND with MOSFET turned off.
7. Average current from V_{CC} to GND after charge up time of MOSFET.
8. See Applications Information section for details on how to adjust the gate slew rate.
9. Operation above T_J = 125°C is not guaranteed.

Product parametric performance is indicated in the Electrical Characteristics for the listed test conditions, unless otherwise noted. Product performance may not be indicated by the Electrical Characteristics if operated under different conditions.

chanhvinh.com

Table 5. SWITCHING CHARACTERISTICS (T_J = 25°C unless otherwise specified) (Notes 10 and 11)

Parameter	Conditions	Symbol	Min	Typ	Max	Unit
Output Slew Rate – Default	V_{CC} = 4.5 V; V_{IN} = 3 V	SR		TBD~20		V/ms
	V_{CC} = 5.0 V; V_{IN} = 3 V			TBD~20		
	V_{CC} = 3.3 V; V_{IN} = 24 V			TBD~20		
	V_{CC} = 5.0 V; V_{IN} = 24 V			TBD~20		
Output Turn−on Delay	V_{CC} = 4.5 V; V_{IN} = 3 V	T_{ON}		TBD		μs
	V_{CC} = 5.0 V; V_{IN} = 3 V			TBD		
	V_{CC} = 3.3 V; V_{IN} = 24 V			TBD		
	V_{CC} = 5.0 V; V_{IN} = 24 V			TBD		
Output Turn−off Delay	V_{CC} = 4.5 V; V_{IN} = 3 V	T_{OFF}		TBD		μs
	V_{CC} = 5.0 V; V_{IN} = 3 V			TBD		
	V_{CC} = 3.3 V; V_{IN} = 24 V			TBD		
	V_{CC} = 5.0 V; V_{IN} = 24 V			TBD		
Power Good Turn−on Time	V_{CC} = 4.5 V; V_{IN} = 3 V	$T_{PG,ON}$		TBD		ms
	V_{CC} = 5.0 V; V_{IN} = 3 V			TBD		
	V_{CC} = 3.3 V; V_{IN} = 24 V			TBD		
	V_{CC} = 5.0 V; V_{IN} = 24 V			TBD		
Power Good Turn−off Time	V_{CC} = 4.5 V; V_{IN} = 3 V	$T_{PG,OFF}$		TBD		ns
	V_{CC} = 5.0 V; V_{IN} = 3 V			TBD		
	V_{CC} = 3.3 V; V_{IN} = 24 V			TBD		
	V_{CC} = 5.0 V; V_{IN} = 24 V			TBD		

10. See below figure for Test Circuit and Timing Diagram.
11. Tested with the following conditions: $V_{TERM} = V_{CC}$; R_{PG} = 100 kΩ; R_L = 10 Ω; C_L = 0.1 μF.

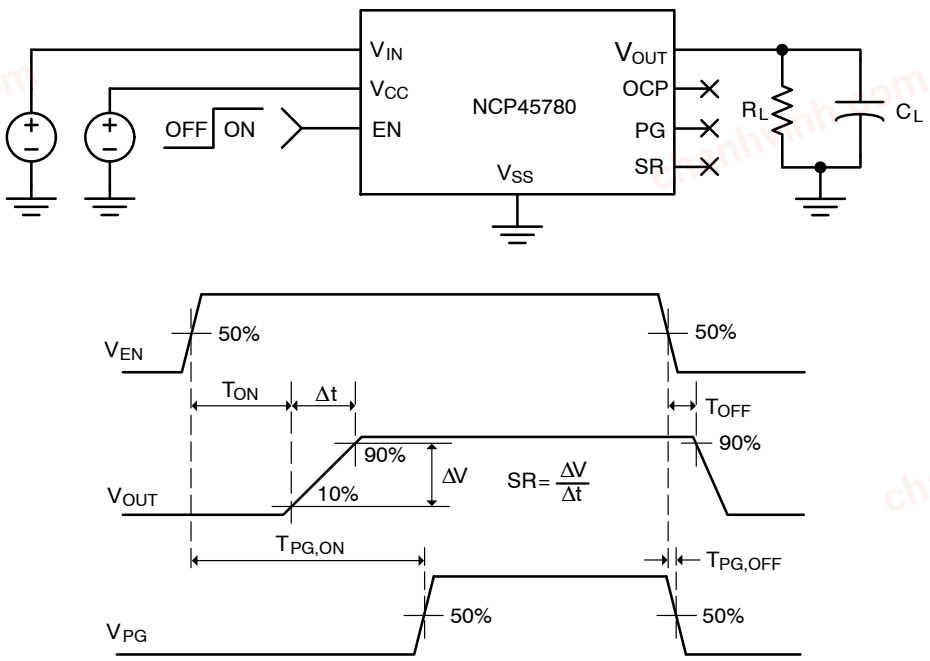

Figure 2. Switching Characteristics Test Circuit and Timing Diagrams

chanhvinh.com

APPLICATIONS INFORMATION

Enable Control

The NCP45780 part enables the MOSFET in an active−high configuration. When the EN pin is at a logic high level and the V_{CC} supply pin has an adequate voltage applied, the MOSFET will be enabled. When the EN pin is at a logic low level, the MOSFET will be disabled. An internal pull down resistor to ground on the EN pin ensures that the MOSFET will be disabled when not driven.

Short−Circuit Protection (Hard short)

The NCP45780 device is equipped with a short−circuit protection that helps protect the part and the system from a sudden high−current event, such as the output, V_{OUT}, being hard−shorted to ground.

Once active, the circuitry monitors the voltage difference between the V_{IN} pin and the V_{OUT} pin. When the difference is equal to the short−circuit protection threshold voltage, the MOSFET is turned off and the load bleed is activated. The part remains off and is latched in the Fault state until EN is toggled or V_{CC} supply voltage is cycled, at which point the MOSFET will be turned on in a controlled fashion with the normal output turn−on delay and slew rate.

Over−Current Protection (Soft short)

The NCP45780 device is equipped with an over−current protection (OCP) that helps protect the part and the system from a high current event which exceeds the expected operational current (e.g., a soft short).

In the event that the current from the V_{IN} pin to the V_{OUT} pin exceeds the OCP threshold for longer than the blanking time, the MOSFET will shut down and the PG pin is driven low. Like the short−circuit protection, the part remains latched in the Fault state until EN is toggled or V_{CC} supply voltage is cycled, at which point the MOSFET will be turned on in a controlled fashion with the normal output turn−on delay and slew rate.

The over−current trip point is determined by the resistance between the OCP pin and ground. If no over−current protection is needed, then the OCP pin should be tied to GND; if the OCP protection is disabled in this way, the short−circuit protection will still remain active.

Thermal Shutdown

The thermal shutdown of the NCP45780 device protects the part from internally or externally generated excessive temperatures. This circuitry is disabled when EN is not active to reduce standby current. When an over−temperature condition is detected, the MOSFET is turned off and the load bleed is activated.

The part comes out of thermal shutdown when the junction temperature decreases to a safe operating temperature as dictated by the thermal hysteresis. Upon exiting a thermal shutdown state, and if EN remains active, the MOSFET will be turned on in a controlled fashion with the normal output turn−on delay and slew rate.

Under Voltage Lockout

The under voltage lockout of the NCP45780 device turns the MOSFET off and activates the load bleed when the input voltage, V_{IN}, drops below the under voltage lockout threshold. This circuitry is disabled when EN is not active to reduce standby current.

If the V_{IN} voltage rises above the under voltage lockout threshold, and EN remains active, the MOSFET will be turned on in a controlled fashion with the normal output turn−on delay and slew rate.

Power Good

The NCP45780 device has a power good output (PG) that can be used to indicate when the gate of the MOSFET is fully charged. The PG pin is an active−high, open−drain output that requires an external pull up resistor, RPG, greater than or equal to 100 kΩ to an external voltage source, VTERM, that is compatible with input levels of all devices connected to this pin (as shown in Figures TBD).

The power good output can be used as the enable signal for other active−high devices in the system (as shown in Figure TBD). This allows for guaranteed by design power sequencing and reduces the number of enable signals needed from the system controller. If the power good feature is not used in the application, the PG pin should be tied to GND.

Slew Rate Control

The NCP45780 device is equipped with controlled output slew rate which provides soft start functionality. This limits the inrush current caused by capacitor charging and enables these devices to be used in hot swapping applications.

The slew rate can be decreased with an external capacitor added between the SR pin and ground. With an external capacitor present, the slew rate can be determined by the following equation:

$$\text{Slew Rate} = \frac{K_{SR}}{C_{SR}}\ [V/s] \qquad \text{(eq. 1)}$$

where K_{SR} is the specified slew rate control constant, found on page 3, and C_{SR} is the capacitor added between the SR pin and ground. Note that the slew rate of the device will always be the lower of the default slew rate and the adjusted slew rate. Therefore, if the C_{SR} is not large enough to decrease the slew rate more than the specified default value, the slew rate of the device will be the default value.

Capacitive Load

The peak in−rush current associated with the initial charging of the application load capacitance needs to stay below the specified I_{max}. C_L (capacitive load) should be less then C_{max} as defined by the following equation:

$$C_{max} = \frac{I_{max}}{SR_{typ}} \qquad \text{(eq. 2)}$$

chanhvinh.com

Where I_{max} is the maximum load current, and SR_{typ} is the typical default slew rate when no external load capacitor is added to the SR pin.

ecoSWITCH LAYOUT GUIDELINES

Electrical Layout Considerations

Correct physical PCB layout is important for proper low noise accurate operation of all ecoSWITCH products.

Power Planes: The ecoSWITCH is optimized for extremely low Ron resistance, however, improper PCB layout can substantially increase source to load series resistance by adding PCB board parasitic resistance. Solid connections to the VIN and VOUT pins of the ecoSWITCH to copper planes should be used to achieve low series resistance and good thermal dissipation. The ecoSWITCH requires ample heat dissipation for correct thermal lockout operation. The internal FET dissipates load condition dependent amounts of power in the milliseconds following the rising edge of enable, and providing good thermal conduction from the packaging to the board is critical. Direct coupling of VIN to VOUT should be avoided, as this will adversely affect slew rates. The figure below shows an example of correct power plane layout. The number and location of pins for specific ecoSWITCH products may vary. This demonstrates large planes for both VIN and VOUT, while avoiding capacitive coupling between the two planes.

chanhvinh.com

NCP45780

PACKAGE DIMENSIONS

DFN12 3x3, 0.5P
CASE 506EN
ISSUE O

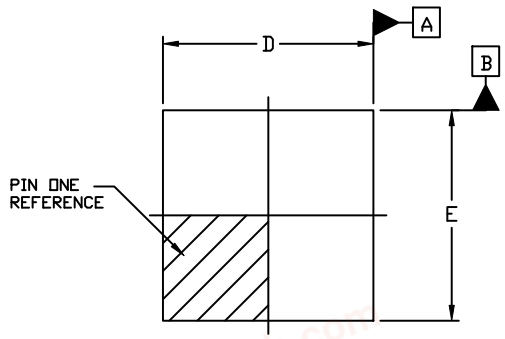

TOP VIEW

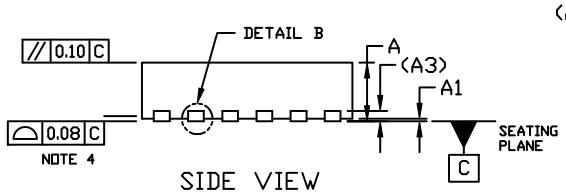

SIDE VIEW

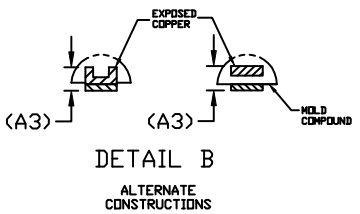

DETAIL B
ALTERNATE CONSTRUCTIONS

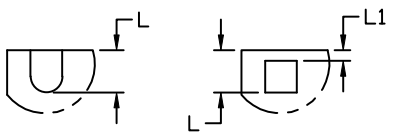

DETAIL A
ALTERNATE TERMINAL CONSTRUCTIONS

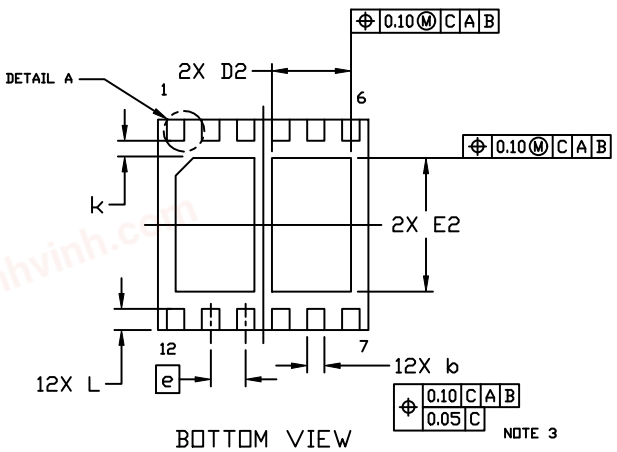

BOTTOM VIEW

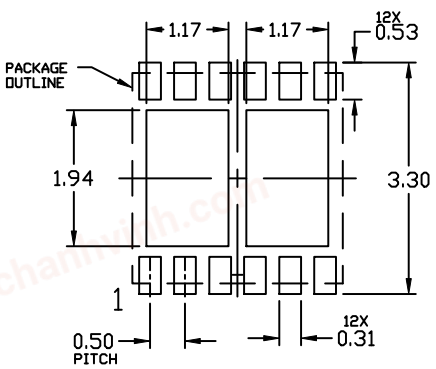

RECOMMENDED MOUNTING FOOTPRINT

NOTES:

1. DIMENSIONING AND TOLERANCING PER ASME Y14.5M, 1994.
2. CONTROLLING DIMENSION: MILLIMETERS
3. DIMENSION b APPLIES TO PLATED TERMINAL AND IS MEASURED BETWEEN 0.15 AND 0.30MM FROM TERMINAL.
4. COPLANARITY APPLIES TO THE EXPOSED PAD AS WELL AS THE TERMINALS.

	MILLIMETERS		
DIM	MIN.	NOM.	MAX.
A	0.80	0.90	1.00
A1	0.00	—	0.05
A3	0.20 REF		
b	0.20	0.25	0.30
D	2.90	3.00	3.10
D2	1.03	1.13	1.23
E	2.90	3.00	3.10
E2	1.80	1.90	2.00
e	0.50 BSC		
k	0.20	—	—
L	0.20	0.30	0.40
L1	—	—	0.15

ecoSwitch is a trademark of Semiconductor Component Industries, LLC (SCILLC)

ON Semiconductor and ON are trademarks of Semiconductor Components Industries, LLC dba ON Semiconductor or its subsidiaries in the United States and/or other countries. ON Semiconductor owns the rights to a number of patents, trademarks, copyrights, trade secrets, and other intellectual property. A listing of ON Semiconductor's product/patent coverage may be accessed at www.onsemi.com/site/pdf/Patent-Marking.pdf. ON Semiconductor reserves the right to make changes without further notice to any products herein. ON Semiconductor makes no warranty, representation or guarantee regarding the suitability of its products for any particular purpose, nor does ON Semiconductor assume any liability arising out of the application or use of any product or circuit, and specifically disclaims any and all liability, including without limitation special, consequential or incidental damages. Buyer is responsible for its products and applications using ON Semiconductor products, including compliance with all laws, regulations and safety requirements or standards, regardless of any support or applications information provided by ON Semiconductor. "Typical" parameters which may be provided in ON Semiconductor data sheets and/or specifications can and do vary in different applications and actual performance may vary over time. All operating parameters, including "Typicals" must be validated for each customer application by customer's technical experts. ON Semiconductor does not convey any license under its patent rights nor the rights of others. ON Semiconductor products are not designed, intended, or authorized for use as a critical component in life support systems or any FDA Class 3 medical devices or medical devices with a same or similar classification in a foreign jurisdiction or any devices intended for implantation in the human body. Should Buyer purchase or use ON Semiconductor products for any such unintended or unauthorized application, Buyer shall indemnify and hold ON Semiconductor and its officers, employees, subsidiaries, affiliates, and distributors harmless against all claims, costs, damages, and expenses, and reasonable attorney fees arising out of, directly or indirectly, any claim of personal injury or death associated with such unintended or unauthorized use, even if such claim alleges that ON Semiconductor was negligent regarding the design or manufacture of the part. ON Semiconductor is an Equal Opportunity/Affirmative Action Employer. This literature is subject to all applicable copyright laws and is not for resale in any manner.

PUBLICATION ORDERING INFORMATION

LITERATURE FULFILLMENT:
Literature Distribution Center for ON Semiconductor
19521 E. 32nd Pkwy, Aurora, Colorado 80011 USA
Phone: 303−675−2175 or 800−344−3860 Toll Free USA/Canada
Fax: 303−675−2176 or 800−344−3867 Toll Free USA/Canada
Email: orderlit@onsemi.com

N. American Technical Support: 800−282−9855 Toll Free USA/Canada
Europe, Middle East and Africa Technical Support:
Phone: 421 33 790 2910

ON Semiconductor Website: **www.onsemi.com**

Order Literature: http://www.onsemi.com/orderlit

For additional information, please contact your local Sales Representative