chanhvinh.com

NCP45560

ecoSWITCH™ Advanced Load Management

Controlled Load Switch with Low R_{ON}

The NCP45560 load switch provides a component and area-reducing solution for efficient power domain switching with inrush current limit via soft−start. In addition to integrated control functionality with ultra low on−resistance, this device offers system safeguards and monitoring via fault protection and power good signaling. This cost effective solution is ideal for power management and hot-swap applications requiring low power consumption in a small footprint.

Features

- Advanced Controller with Charge Pump
- Integrated N-Channel MOSFET with Ultra Low R_{ON}
- Input Voltage Range 0.5 V to 13.5 V
- Soft-Start via Controlled Slew Rate
- Adjustable Slew Rate Control
- Power Good Signal
- Thermal Shutdown
- Undervoltage Lockout
- Short-Circuit Protection
- Extremely Low Standby Current
- Load Bleed (Quick Discharge)
- This is a Pb−Free Device

Typical Applications

- Portable Electronics and Systems
- Notebook and Tablet Computers
- Telecom, Networking, Medical, and Industrial Equipment
- Set−Top Boxes, Servers, and Gateways
- Hot−Swap Devices and Peripheral Ports

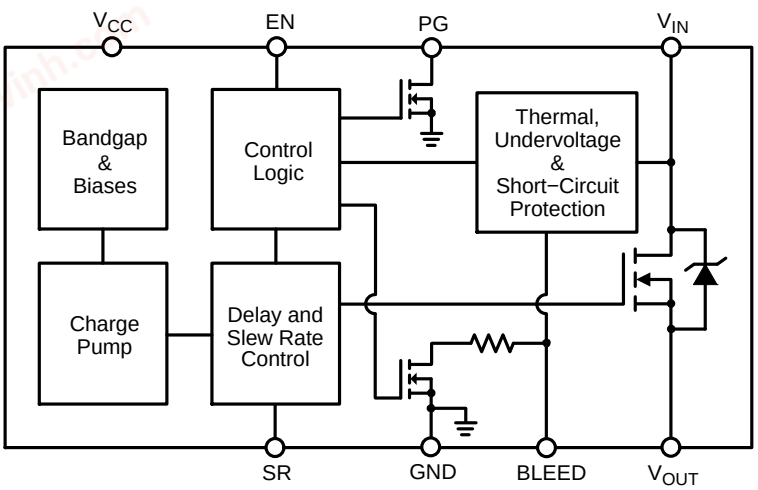

Figure 1. Block Diagram

ON Semiconductor®

www.onsemi.com

R_{ON} TYP	V_{CC}	V_{IN}	I_{MAX}
2.4 mΩ	3.3 V	1.8 V	24 A
2.6 mΩ	3.3 V	5.0 V	
3.2 mΩ	3.3 V	12 V	

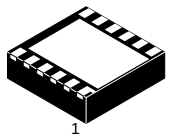

DFN12, 3x3
CASE 506CD

MARKING DIAGRAM



x = H for NCP45560−H
= L for NCP45560−L
A = Assembly Location
L = Wafer Lot
Y = Year
W = Work Week
▪ = Pb−Free Package

(Note: Microdot may be in either location)

PIN CONFIGURATION

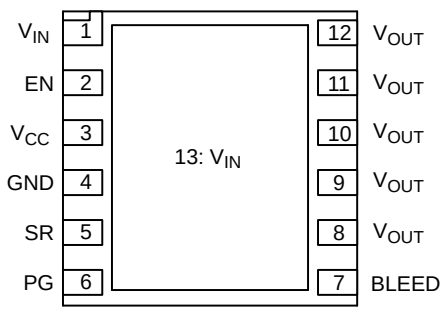

(Top View)

ORDERING INFORMATION

See detailed ordering and shipping information on page 12 of this data sheet.

© Semiconductor Components Industries, LLC, 2015

chanhvinh.com

Table 1. PIN DESCRIPTION

Pin	Name	Function
1, 13	V_{IN}	Drain of MOSFET (0.5 V – 13.5 V), Pin 1 must be connected to Pin 13
2	EN	NCP45560−H − Active−high digital input used to turn on the MOSFET, pin has an internal pull down resistor to GND
		NCP45560−L − Active−low digital input used to turn on the MOSFET, pin has an internal pull up resistor to V_{CC}
3	V_{CC}	Supply voltage to controller (3.0 V − 5.5 V)
4	GND	Controller ground
5	SR	Slew rate adjustment; float if not used
6	PG	Active−high, open−drain output that indicates when the gate of the MOSFET is fully charged, external pull up resistor ≥ 1 kΩ to an external voltage source required; tie to GND if not used.
7	BLEED	Load bleed connection, must be tied to V_{OUT} either directly or through a resistor ≤ 1 kΩ
8−12	V_{OUT}	Source of MOSFET connected to load

Table 2. ABSOLUTE MAXIMUM RATINGS

Rating	Symbol	Value	Unit
Supply Voltage Range	V_{CC}	−0.3 to 6	V
Input Voltage Range	V_{IN}	−0.3 to 18	V
Output Voltage Range	V_{OUT}	−0.3 to 18	V
EN Digital Input Range	V_{EN}	−0.3 to (V_{CC} + 0.3)	V
PG Output Voltage Range (Note 1)	V_{PG}	−0.3 to 6	V
Thermal Resistance, Junction−to−Ambient, Steady State (Note 2)	$R_{\theta JA}$	28.6	°C/W
Thermal Resistance, Junction−to−Ambient, Steady State (Note 3)	$R_{\theta JA}$	49.7	°C/W
Thermal Resistance, Junction−to−Case (V_{IN} Paddle)	$R_{\theta JC}$	1.7	°C/W
Continuous MOSFET Current @ T_A = 25°C (Notes 2 and 4)	I_{MAX}	24	A
Continuous MOSFET Current @ T_A = 25°C (Notes 3 and 4)	I_{MAX}	18.3	A
Total Power Dissipation @ T_A = 25°C (Note 2) Derate above T_A = 25°C	P_D	3.49 34.9	W mW/°C
Total Power Dissipation @ T_A = 25°C (Note 3) Derate above T_A = 25°C	P_D	2.01 20.1	W mW/°C
Storage Temperature Range	T_{STG}	−40 to 150	°C
Lead Temperature, Soldering (10 sec.)	T_{SLD}	260	°C
ESD Capability, Human Body Model (Notes 5 and 6)	ESD_{HBM}	3.0	kV
ESD Capability, Machine Model (Note 5)	ESD_{MM}	200	V
ESD Capability, Charged Device Model (Note 5)	ESD_{CDM}	1.0	kV
Latch−up Current Immunity (Notes 5 and 6)	LU	100	mA

Stresses exceeding those listed in the Maximum Ratings table may damage the device. If any of these limits are exceeded, device functionality should not be assumed, damage may occur and reliability may be affected.

1. PG is an open−drain output that requires an external pull up resistor ≥ 1 kΩ to an external voltage source.
2. Surface−mounted on FR4 board using 1 sq−in pad, 1 oz Cu.
3. Surface−mounted on FR4 board using the minimum recommended pad size, 1 oz Cu.
4. Ensure that the expected operating MOSFET current will not cause the Short−Circuit Protection to turn the MOSFET off undesirably.
5. Tested by the following methods @ T_A = 25°C:
   ESD Human Body Model tested per JESD22−A114
   ESD Machine Model tested per JESD22−A115
   ESD Charged Device Model per ESD STM5.3.1
   Latch−up Current tested per JESD78
6. Rating is for all pins except for V_{IN} and V_{OUT} which are tied to the internal MOSFET's Drain and Source. Typical MOSFET ESD performance for V_{IN} and V_{OUT} should be expected and these devices should be treated as ESD sensitive.

chanhvinh.com

Table 3. OPERATING RANGES

Rating	Symbol	Min	Max	Unit
Supply Voltage	V_{CC}	3	5.5	V
Input Voltage	V_{IN}	0.5	13.5	V
Ground	GND		0	V
Ambient Temperature	T_A	−40	85	°C
Junction Temperature	T_J	−40	125	°C

Table 4. ELECTRICAL CHARACTERISTICS (T_J = 25°C unless otherwise specified)

Parameter	Conditions (Note 7)	Symbol	Min	Typ	Max	Unit
MOSFET						
On−Resistance	V_{CC} = 3.3 V; V_{IN} = 1.8 V	R_{ON}		2.4	3.3	mΩ
	V_{CC} = 3.3 V; V_{IN} = 5 V			2.6	3.6	
	V_{CC} = 3.3 V; V_{IN} = 12 V			3.2	5.1	
Leakage Current (Note 8)	V_{EN} = 0 V; V_{IN} = 13.5 V	I_{LEAK}		0.1	1.0	μA
CONTROLLER						
Supply Standby Current (Note 9)	V_{EN} = 0 V; V_{CC} = 3 V	I_{STBY}		0.65	2.0	μA
	V_{EN} = 0 V; V_{CC} = 5.5 V			3.2	4.5	
Supply Dynamic Current (Note 10)	V_{EN} = V_{CC} = 3 V; V_{IN} = 12 V	I_{DYN}		280	400	μA
	V_{EN} = V_{CC} = 5.5 V; V_{IN} = 1.8 V			530	750	
Bleed Resistance	V_{EN} = 0 V; V_{CC} = 3 V	R_{BLEED}	86	115	144	Ω
	V_{EN} = 0 V; V_{CC} = 5.5 V		72	97	121	
Bleed Pin Leakage Current	V_{EN} = V_{CC} = 3 V, V_{IN} = 1.8 V	I_{BLEED}		6.0	10	μA
	V_{EN} = V_{CC} = 3 V, V_{IN} = 12 V			60	70	
EN Input High Voltage	V_{CC} = 3 V − 5.5 V	V_{IH}	2.0			V
EN Input Low Voltage	V_{CC} = 3 V − 5.5 V	V_{IL}			0.8	V
EN Input Leakage Current	NCP45560−H; V_{EN} = 0 V	I_{IL}		90	500	nA
	NCP45560−L; V_{EN} = V_{CC}	I_{IH}		90	500	
EN Pull Down Resistance	NCP45560−H	R_{PD}	76	100	124	kΩ
EN Pull Up Resistance	NCP45560−L	R_{PU}	76	100	124	kΩ
PG Output Low Voltage (Note 11)	V_{CC} = 3 V; I_{SINK} = 5 mA	V_{OL}			0.2	V
PG Output Leakage Current (Note 12)	V_{CC} = 3 V; V_{TERM} = 3.3 V	I_{OH}		5.0	100	nA
Slew Rate Control Constant (Note 13)	V_{CC} = 3 V	K_{SR}	26	33	40	μA
FAULT PROTECTIONS						
Thermal Shutdown Threshold (Note 14)	V_{CC} = 3 V − 5.5 V	T_{SDT}		145		°C
Thermal Shutdown Hysteresis (Note 14)	V_{CC} = 3 V − 5.5 V	T_{HYS}		20		°C
V_{IN} Undervoltage Lockout Threshold	V_{CC} = 3 V	V_{UVLO}	0.25	0.35	0.45	V
V_{IN} Undervoltage Lockout Hysteresis	V_{CC} = 3 V	V_{HYS}	25	40	60	mV
Short−Circuit Protection Threshold	V_{CC} = 3 V; V_{IN} = 0.5 V	V_{SC}	200	265	350	mV
	V_{CC} = 3 V; V_{IN} = 13.5 V		100	285	500	

7. V_{EN} shown only for NCP45560−H, (EN Active−High) unless otherwise specified.
8. Average current from V_{IN} to V_{OUT} with MOSFET turned off.
9. Average current from V_{CC} to GND with MOSFET turned off.
10. Average current from V_{CC} to GND after charge up time of MOSFET.
11. PG is an open-drain output that is pulled low when the MOSFET is disabled.
12. PG is an open-drain output that is not driven when the gate of the MOSFET is fully charged, requires an external pull up resistor ≥ 1 kΩ to an external voltage source, V_{TERM}.
13. See Applications Information section for details on how to adjust the slew rate.
14. Operation above T_J = 125°C is not guaranteed.

chanhvinh.com

Table 5. SWITCHING CHARACTERISTICS (T_J = 25°C unless otherwise specified) (Notes 15 and 16)

Parameter	Conditions	Symbol	Min	Typ	Max	Unit
Output Slew Rate	V_{CC} = 3.3 V; V_{IN} = 1.8 V	SR		12.4		kV/s
	V_{CC} = 5.0 V; V_{IN} = 1.8 V			12.6		
	V_{CC} = 3.3 V; V_{IN} = 12 V			13.7		
	V_{CC} = 5.0 V; V_{IN} = 12 V			14.0		
Output Turn−on Delay	V_{CC} = 3.3 V; V_{IN} = 1.8 V	T_{ON}		195		μs
	V_{CC} = 5.0 V; V_{IN} = 1.8 V			180		
	V_{CC} = 3.3 V; V_{IN} = 12 V			280		
	V_{CC} = 5.0 V; V_{IN} = 12 V			265		
Output Turn−off Delay	V_{CC} = 3.3 V; V_{IN} = 1.8 V	T_{OFF}		4.1		μs
	V_{CC} = 5.0 V; V_{IN} = 1.8 V			3.5		
	V_{CC} = 3.3 V; V_{IN} = 12 V			1.4		
	V_{CC} = 5.0 V; V_{IN} = 12 V			0.8		
Power Good Turn−on Time	V_{CC} = 3.3 V; V_{IN} = 1.8 V	$T_{PG,ON}$		1.71		ms
	V_{CC} = 5.0 V; V_{IN} = 1.8 V			1.08		
	V_{CC} = 3.3 V; V_{IN} = 12 V			2.15		
	V_{CC} = 5.0 V; V_{IN} = 12 V			1.35		
Power Good Turn−off Time	V_{CC} = 3.3 V; V_{IN} = 1.8 V	$T_{PG,OFF}$		28		ns
	V_{CC} = 5.0 V; V_{IN} = 1.8 V			21		
	V_{CC} = 3.3 V; V_{IN} = 12 V			28		
	V_{CC} = 5.0 V; V_{IN} = 12 V			21		

15. See below figure for Test Circuit and Timing Diagram.
16. Tested with the following conditions: V_{TERM} = V_{CC}; R_{PG} = 100 kΩ; R_L = 10 Ω; C_L = 0.1 μF.

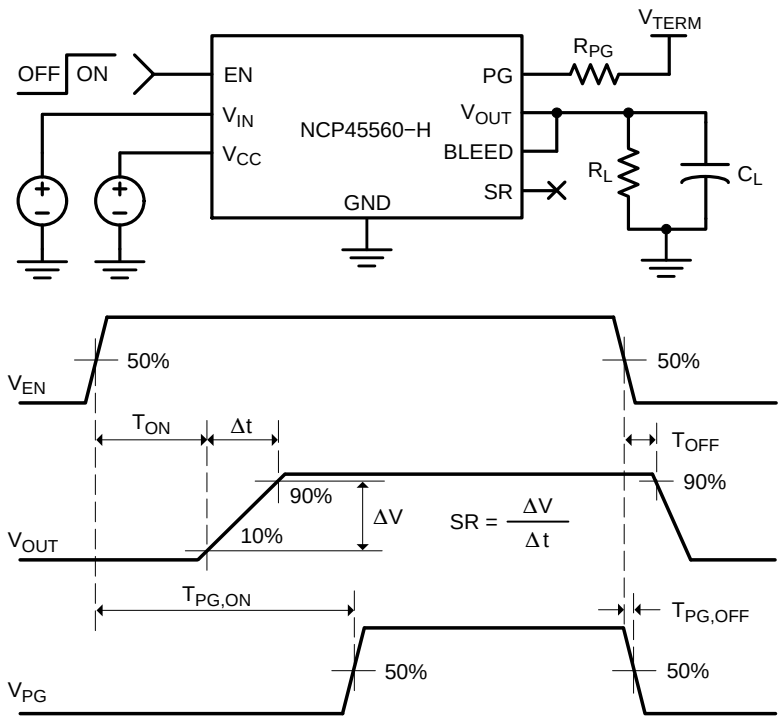

Figure 2. Switching Characteristics Test Circuit and Timing Diagrams

chanhvinh.com

TYPICAL CHARACTERISTICS

(T_J = 25°C unless otherwise specified)

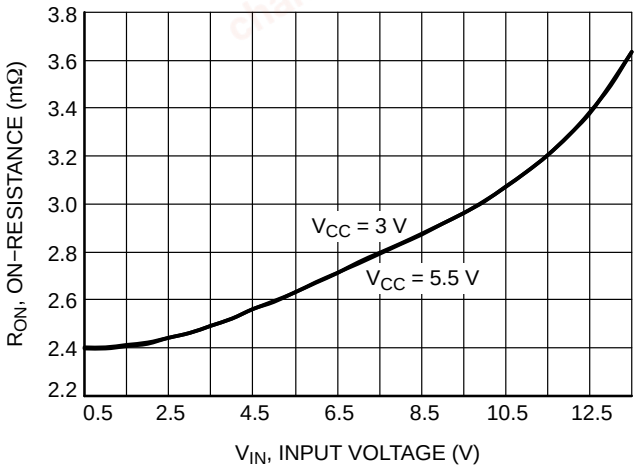

Figure 3. On−Resistance vs. Input Voltage

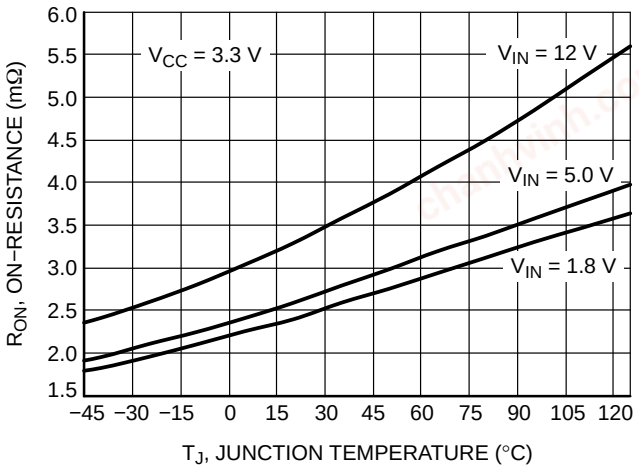

Figure 4. On−Resistance vs. Temperature

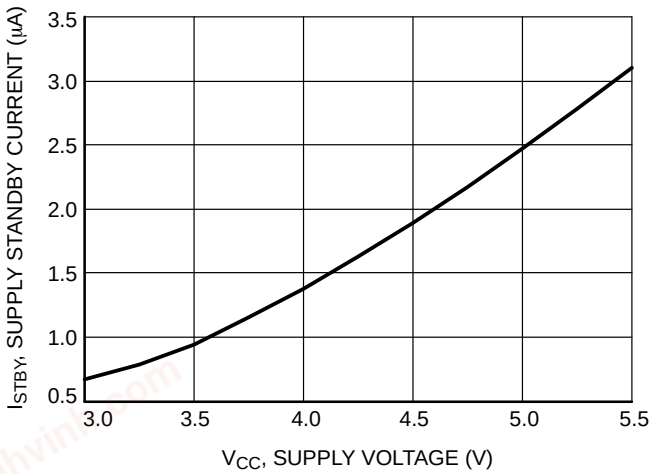

Figure 5. Supply Standby Current vs. Supply Voltage

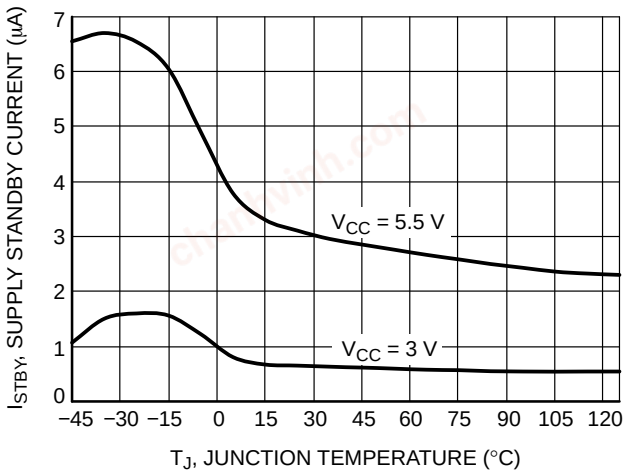

Figure 6. Supply Standby Current vs. Temperature

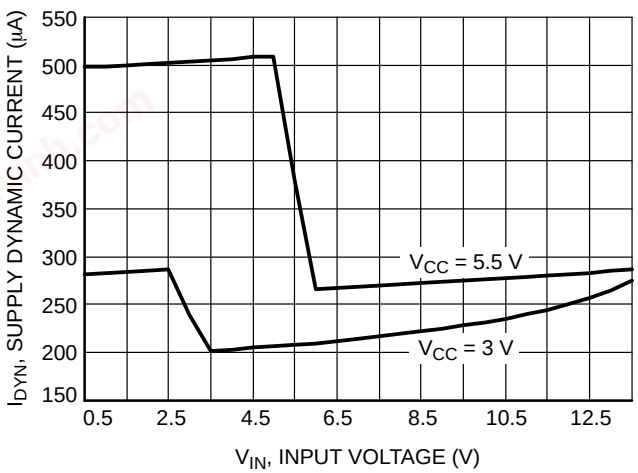

Figure 7. Supply Dynamic Current vs. Input Voltage

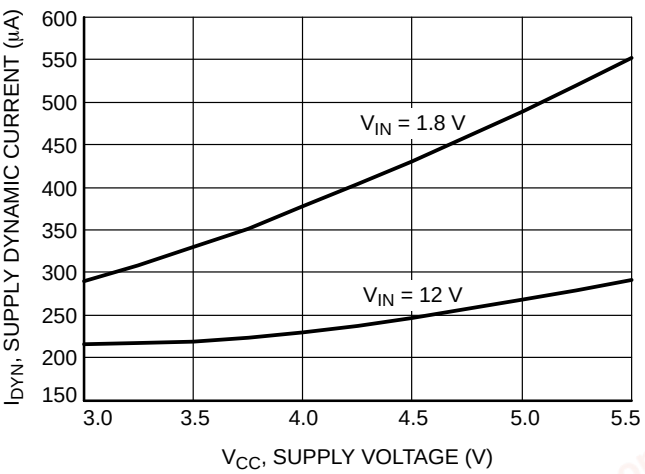

Figure 8. Supply Dynamic Current vs. Supply Voltage

chanhvinh.com

TYPICAL CHARACTERISTICS

(T_J = 25°C unless otherwise specified)

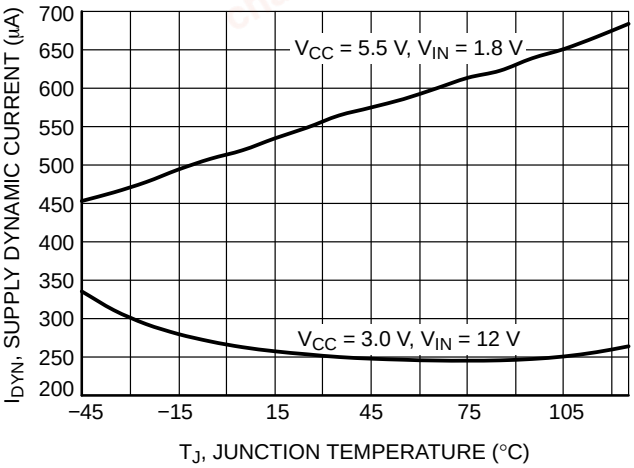

Figure 9. Supply Dynamic Current vs. Temperature

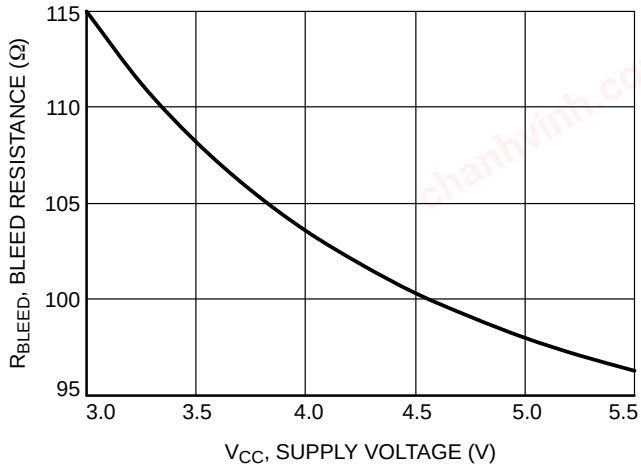

Figure 10. Bleed Resistance vs. Supply Voltage

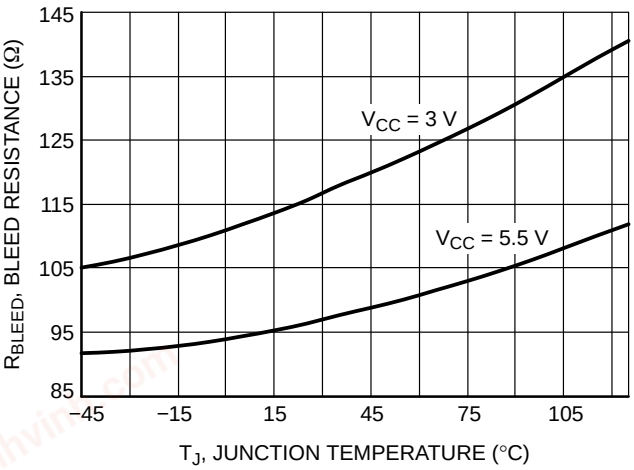

Figure 11. Bleed Resistance vs. Temperature

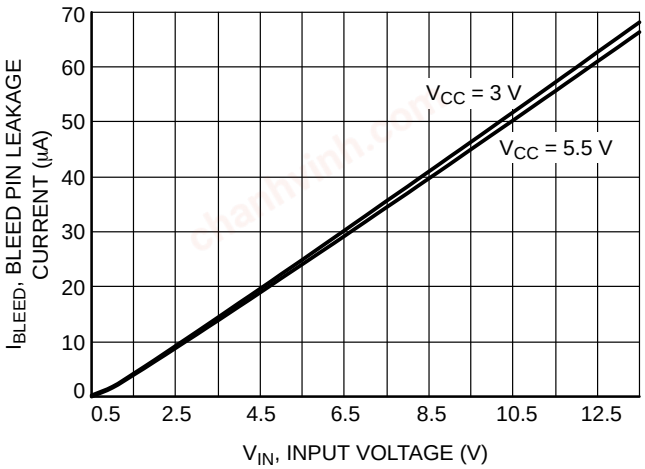

Figure 12. Bleed Pin Leakage Current vs. Input Voltage

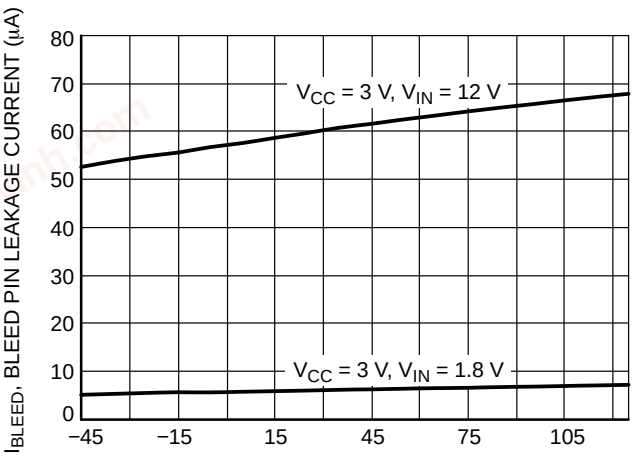

Figure 13. Bleed Pin Leakage Current vs. Temperature

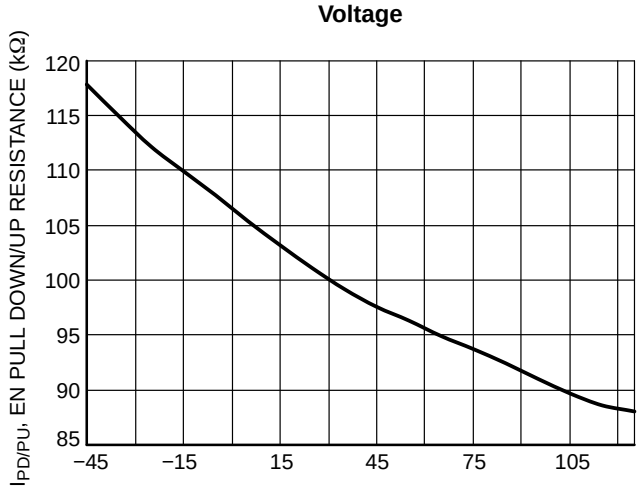

Figure 14. EN Pull Down/Up Resistance vs. Temperature

chanhvinh.com

TYPICAL CHARACTERISTICS

(T_J = 25°C unless otherwise specified)

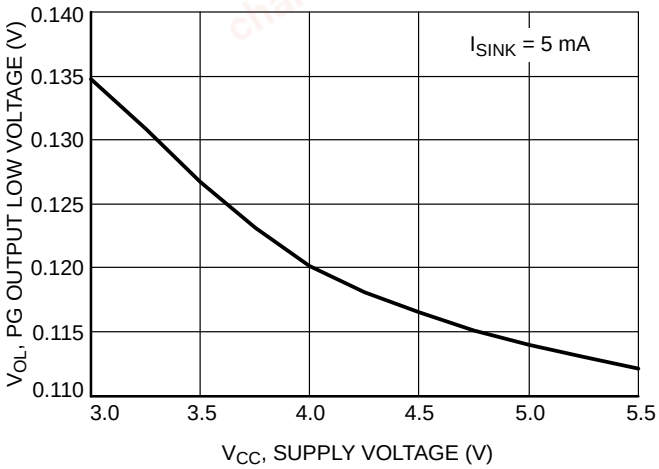

Figure 15. PG Output Low Voltage vs. Supply Voltage

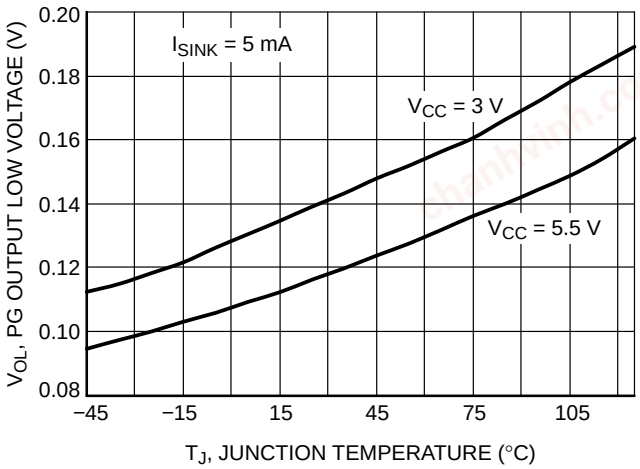

Figure 16. PG Output Low Voltage vs. Temperature

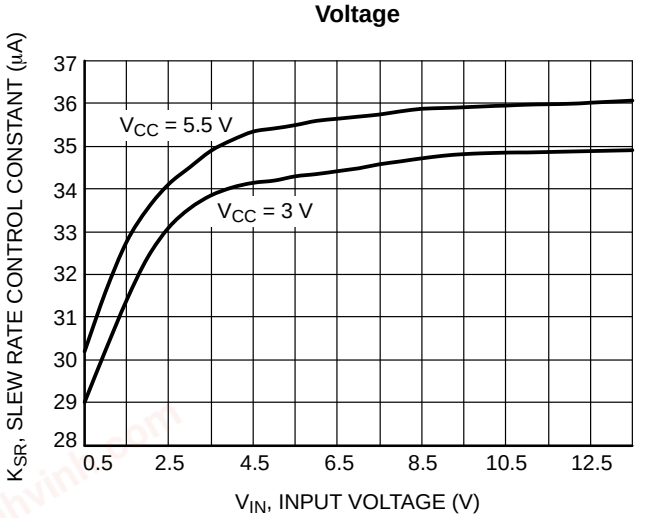

Figure 17. Slew Rate Control Constant vs. Input Voltage

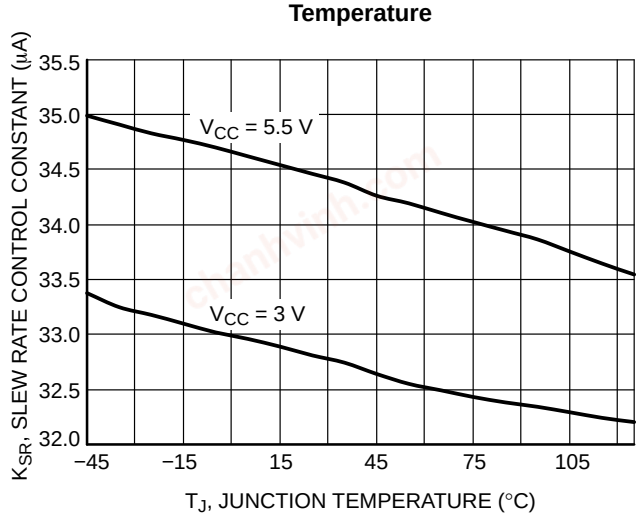

Figure 18. Slew Rate Control Constant vs. Temperature

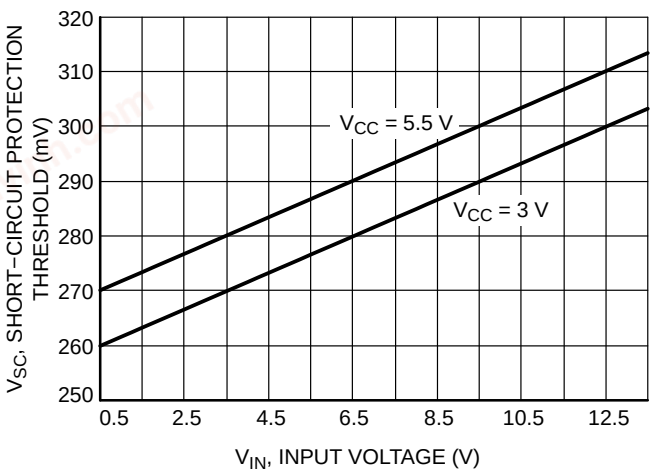

Figure 19. Short−Circuit Protection Threshold vs. Input Voltage

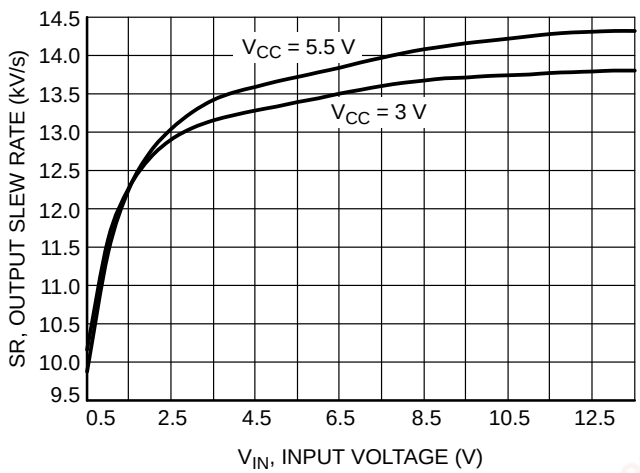

Figure 20. Output Slew Rate vs. Input Voltage

chanhvinh.com

TYPICAL CHARACTERISTICS

(T_J = 25°C unless otherwise specified)

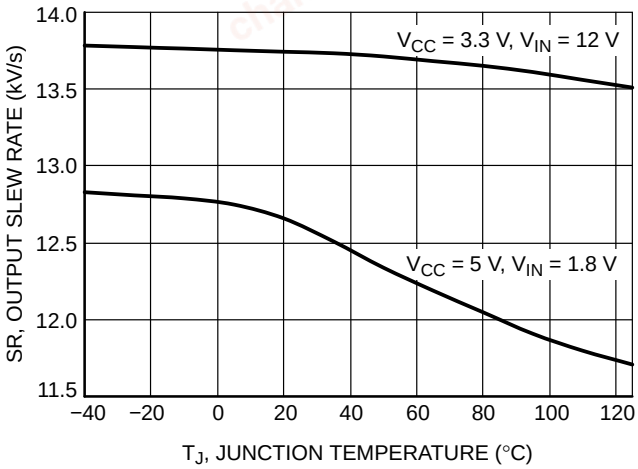

Figure 21. Output Slew Rate vs. Temperature

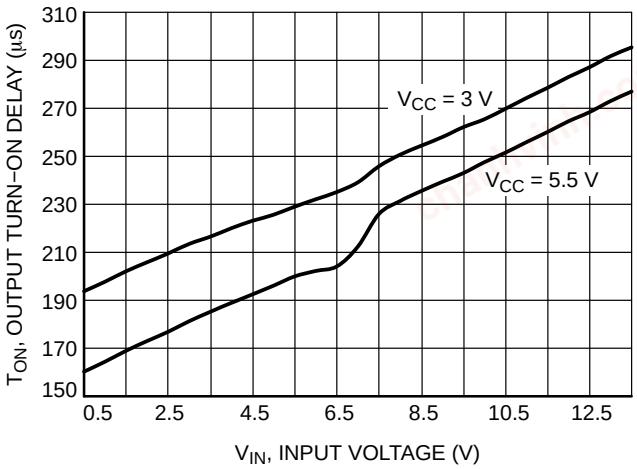

Figure 22. Output Turn−on Delay vs. Input Voltage

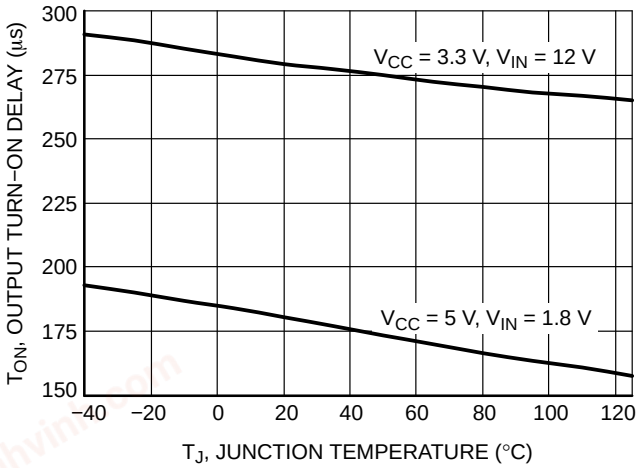

Figure 23. Output Turn−on Delay vs. Temperature

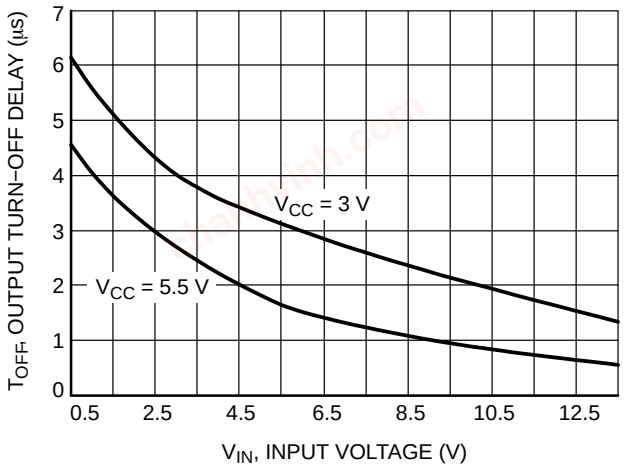

Figure 24. Output Turn−off Delay vs. Input Voltage

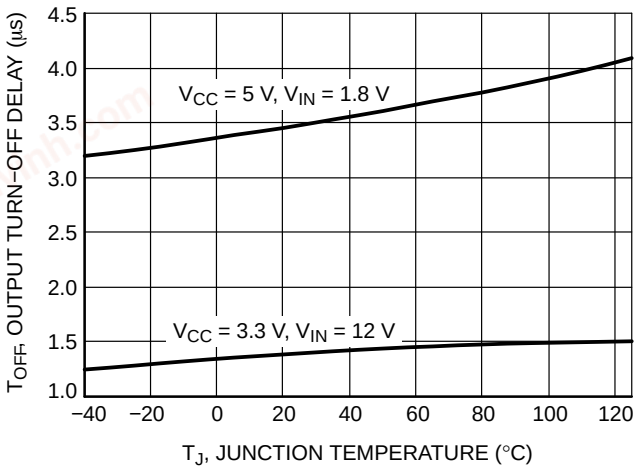

Figure 25. Output Turn−off Delay vs. Temperature

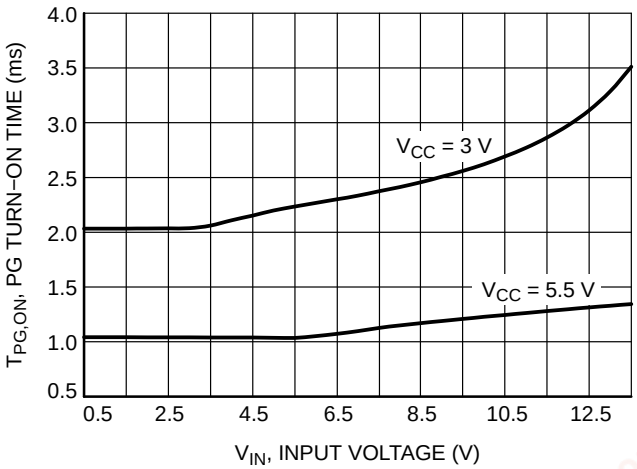

Figure 26. Power Good Turn−on Time vs. Input Voltage

chanhvinh.com

TYPICAL CHARACTERISTICS

(T_J = 25°C unless otherwise specified)

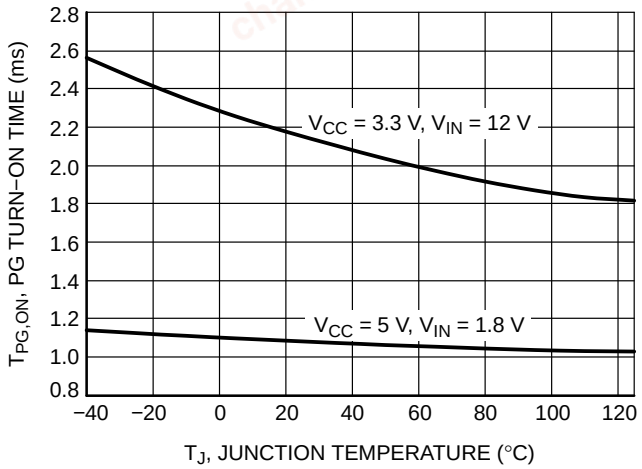

Figure 27. Power Good Turn−on Time vs. Temperature

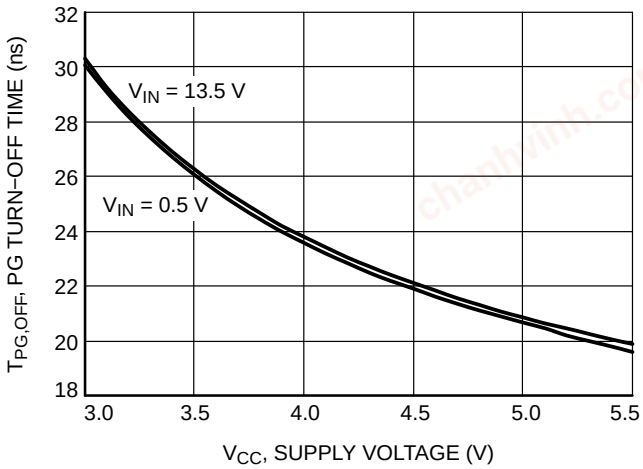

Figure 28. Power Good Turn−off Time vs. Supply Voltage

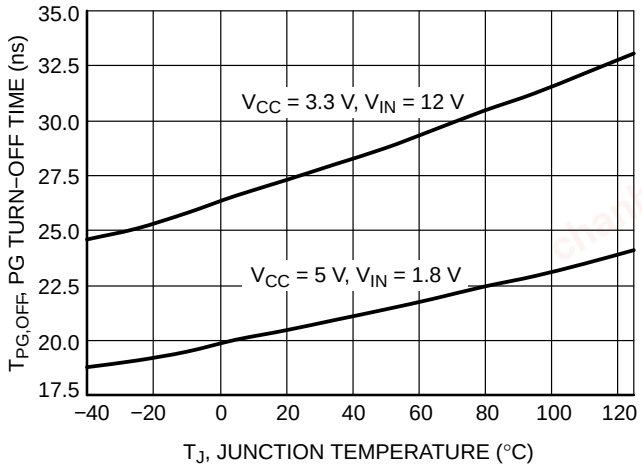

Figure 29. Power Good Turn−off Time vs. Temperature

chanhvinh.com

APPLICATIONS INFORMATION

Enable Control

The NCP45560 has two part numbers, NCP45560−H and NCP45560−L, that only differ in the polarity of the enable control.

The NCP45560−H device allows for enabling the MOSFET in an active−high configuration. When the V_{CC} supply pin has an adequate voltage applied and the EN pin is at a logic high level, the MOSFET will be enabled. Similarly, when the EN pin is at a logic low level, the MOSFET will be disabled. An internal pull down resistor to ground on the EN pin ensures that the MOSFET will be disabled when not being driven.

The NCP45560−L device allows for enabling the MOSFET in an active−low configuration. When the V_{CC} supply pin has an adequate voltage applied and the EN pin is at a logic low level, the MOSFET will be enabled. Similarly, when the EN pin is at a logic high level, the MOSFET will be disabled. An internal pull up resistor to V_{CC} on the EN pin ensures that the MOSFET will be disabled when not being driven.

Power Sequencing

The NCP45560 devices will function with any power sequence, but the output turn−on delay performance may vary from what is specified. To achieve the specified performance, there are two recommended power sequences:

1. $V_{CC} \rightarrow V_{IN} \rightarrow V_{EN}$
2. $V_{IN} \rightarrow V_{CC} \rightarrow V_{EN}$

Load Bleed (Quick Discharge)

The NCP45560 devices have an internal bleed resistor, R_{BLEED}, which is used to bleed the charge off of the load to ground after the MOSFET has been disabled. In series with the bleed resistor is a bleed switch that is enabled whenever the MOSFET is disabled. The MOSFET and the bleed switch are never concurrently active.

It is required that the BLEED pin be connected to V_{OUT} either directly (as shown in Figure 31) or through an external resistor, R_{EXT} (as shown in Figure 30). R_{EXT} should not exceed 1 kΩ and can be used to increase the total bleed resistance.

Care must be taken to ensure that the power dissipated across R_{BLEED} is kept at a safe level. The maximum continuous power that can be dissipated across R_{BLEED} is 0.4 W. R_{EXT} can be used to decrease the amount of power dissipated across R_{BLEED}.

Power Good

The NCP45560 devices have a power good output (PG) that can be used to indicate when the gate of the MOSFET is fully charged. The PG pin is an active−high, open−drain output that requires an external pull up resistor, R_{PG}, greater than or equal to 1 kΩ to an external voltage source, V_{TERM}, compatible with input levels of other devices connected to this pin (as shown in Figures 30 and 31).

The power good output can be used as the enable signal for other active−high devices in the system (as shown in Figure 32). This allows for guaranteed by design power sequencing and reduces the number of enable signals needed from the system controller. If the power good feature is not used in the application, the PG pin should be tied to GND.

Slew Rate Control

The NCP45560 devices are equipped with controlled output slew rate which provides soft start functionality. This limits the inrush current caused by capacitor charging and enables these devices to be used in hot swap applications.

The slew rate can be decreased with an external capacitor added between the SR pin and ground (as shown in Figures 30 and 31). With an external capacitor present, the slew rate can be determined by the following equation:

$$\text{Slew Rate} = \frac{K_{SR}}{C_{SR}} \text{ [V/s]} \qquad \text{(eq. 1)}$$

where K_{SR} is the specified slew rate control constant, found in Table 4, and C_{SR} is the slew rate control capacitor added between the SR pin and ground. The slew rate of the device will always be the lower of the default slew rate and the adjusted slew rate. Therefore, if the C_{SR} is not large enough to decrease the slew rate more than the specified default value, the slew rate of the device will be the default value. The SR pin can be left floating if the slew rate does not need to be decreased.

Short−Circuit Protection

The NCP45560 devices are equipped with short−circuit protection that is used to help protect the part and the system from a sudden high−current event, such as the output, V_{OUT}, being shorted to ground. This circuitry is only active when the gate of the MOSFET is fully charged.

Once active, the circuitry monitors the difference in the voltage on the V_{IN} pin and the voltage on the BLEED pin. In order for the V_{OUT} voltage to be monitored through the BLEED pin, it is required that the BLEED pin be connected to V_{OUT} either directly (as shown in Figure 31) or through a resistor, R_{EXT} (as shown in Figure 30), which should not exceed 1 kΩ. With the BLEED pin connected to V_{OUT}, the short−circuit protection is able to monitor the voltage drop across the MOSFET.

If the voltage drop across the MOSFET is greater than or equal to the short−circuit protection threshold voltage, the MOSFET is immediately turned off and the load bleed is activated. The part remains latched in this off state until EN is toggled or V_{CC} supply voltage is cycled, at which point the MOSFET will be turned on in a controlled fashion with the normal output turn−on delay and slew rate. The current through the MOSFET that will cause a short−circuit event can be calculated by dividing the short−circuit protection threshold by the expected on−resistance of the MOSFET.

chanhvinh.com

Thermal Shutdown

The thermal shutdown of the NCP45560 devices protects the part from internally or externally generated excessive temperatures. This circuitry is disabled when EN is not active to reduce standby current. When an over−temperature condition is detected, the MOSFET is immediately turned off and the load bleed is activated.

The part comes out of thermal shutdown when the junction temperature decreases to a safe operating temperature as dictated by the thermal hysteresis. Upon exiting a thermal shutdown state, and if EN remains active, the MOSFET will be turned on in a controlled fashion with the normal output turn−on delay and slew rate.

Undervoltage Lockout

The undervoltage lockout of the NCP45560 devices turns the MOSFET off and activates the load bleed when the input voltage, V_{IN}, is less than or equal to the undervoltage lockout threshold. This circuitry is disabled when EN is not active to reduce standby current.

If the V_{IN} voltage rises above the undervoltage lockout threshold, and EN remains active, the MOSFET will be turned on in a controlled fashion with the normal output turn−on delay and slew rate.

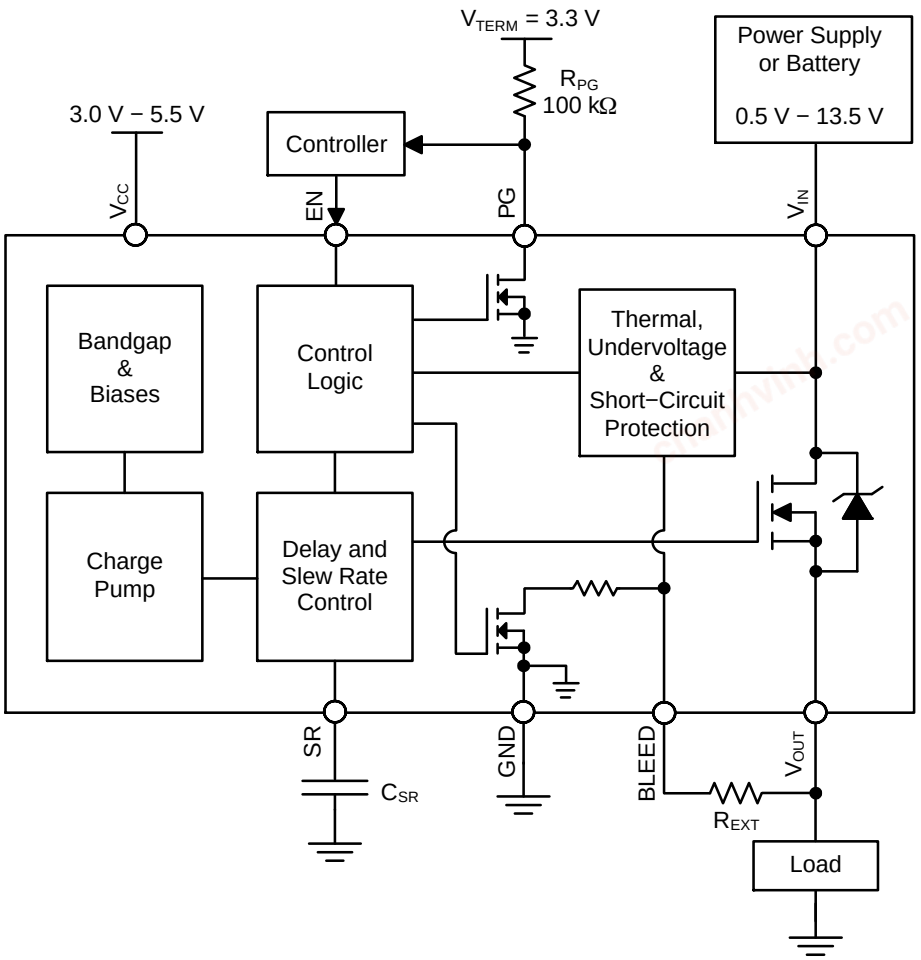

Figure 30. Typical Application Diagram − Load Switch

chanhvinh.com

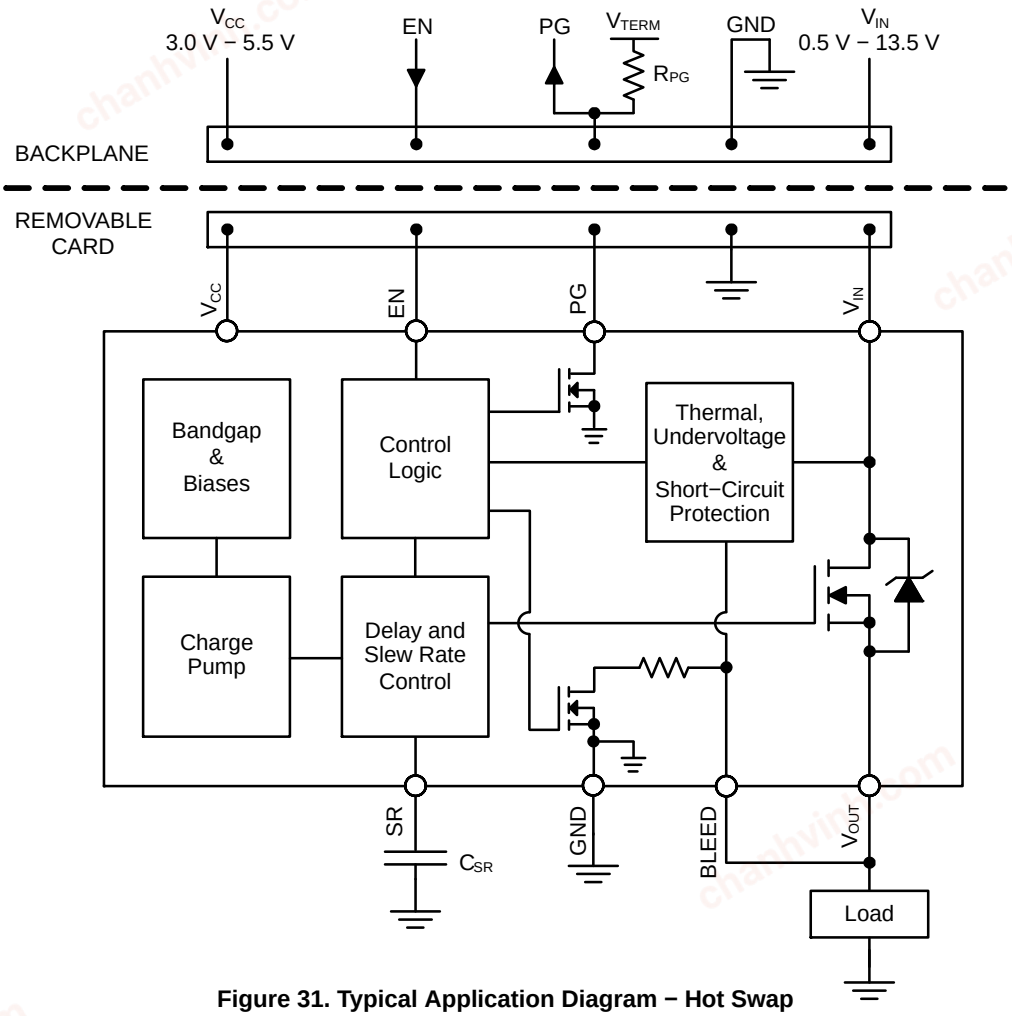

Figure 31. Typical Application Diagram − Hot Swap

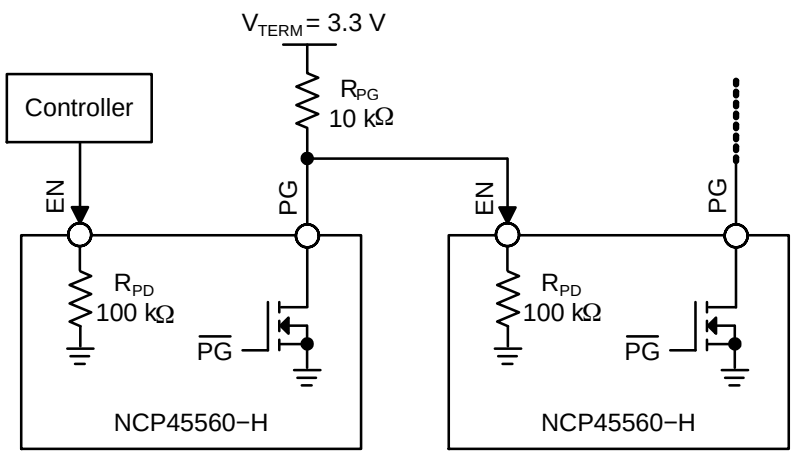

Figure 32. Simplified Application Diagram − Power Sequencing with PG Output

ORDERING INFORMATION

Device	EN Polarity	Package	Shipping†
NCP45560IMNTWG−H	Active−High	DFN12 (Pb−Free)	3000 / Tape & Reel
NCP45560IMNTWG−L	Active−Low		

†For information on tape and reel specifications, including part orientation and tape sizes, please refer to our Tape and Reel Packaging Specifications Brochure, BRD8011/D.

chanhvinh.com

NCP45560

PACKAGE DIMENSIONS

DFN12 3x3, 0.5P
CASE 506CD
ISSUE A

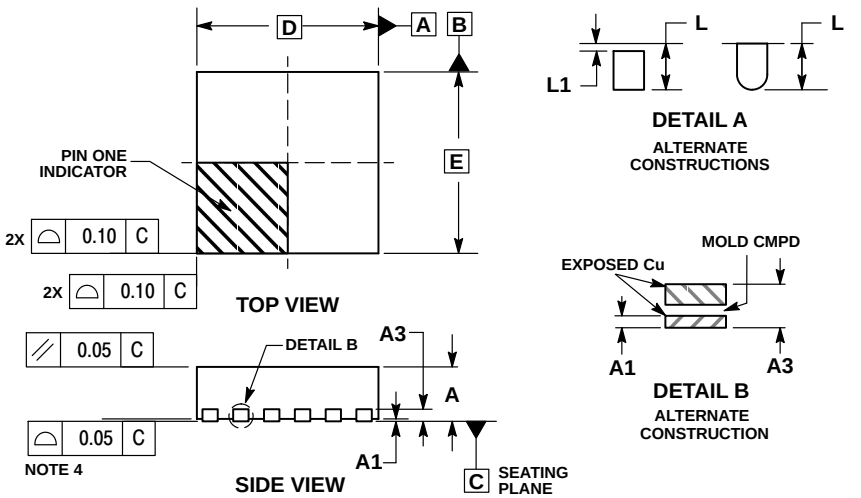

NOTES:
1. DIMENSIONING AND TOLERANCING PER ASME Y14.5M, 1994.
2. CONTROLLING DIMENSION: MILLIMETERS.
3. DIMENSION b APPLIES TO PLATED TERMINAL AND IS MEASURED BETWEEN 0.15 AND 0.30 MM FROM TERMINAL TIP.
4. COPLANARITY APPLIES TO THE EXPOSED PAD AS WELL AS THE TERMINALS.

	MILLIMETERS	
DIM	MIN	MAX
A	0.80	1.00
A1	0.00	0.05
A3	0.20 REF	
b	0.20	0.30
D	3.00 BSC	
D2	2.60	2.80
E	3.00 BSC	
E2	1.90	2.10
e	0.50 BSC	
L	0.20	0.40
L1	----	0.15
L2	0.10 REF	
K	0.15 MIN	

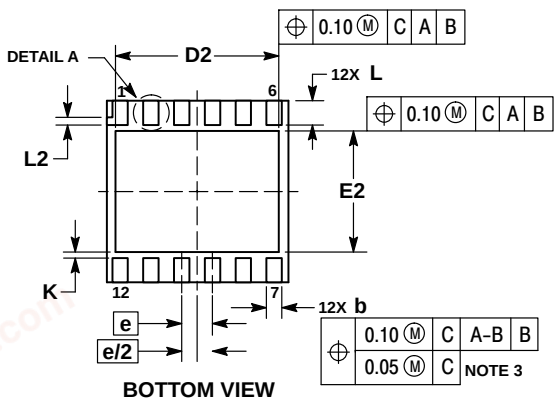

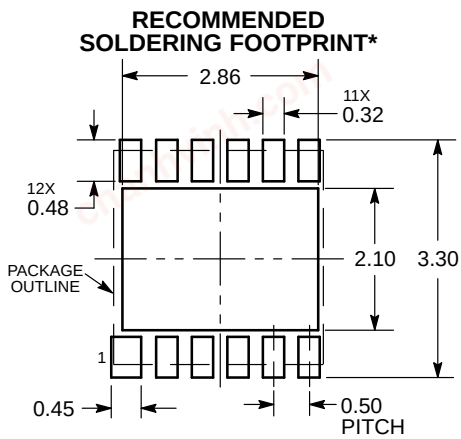

*For additional information on our Pb−Free strategy and soldering details, please download the ON Semiconductor Soldering and Mounting Techniques Reference Manual, SOLDERRM/D.

ecoSWITCH is a trademark of Semiconductor Components Industries, LLC (SCILLC).

ON Semiconductor and ON are registered trademarks of Semiconductor Components Industries, LLC (SCILLC). SCILLC owns the rights to a number of patents, trademarks, copyrights, trade secrets, and other intellectual property. A listing of SCILLC's product/patent coverage may be accessed at www.onsemi.com/site/pdf/Patent−Marking.pdf. SCILLC reserves the right to make changes without further notice to any products herein. SCILLC makes no warranty, representation or guarantee regarding the suitability of its products for any particular purpose, nor does SCILLC assume any liability arising out of the application or use of any product or circuit, and specifically disclaims any and all liability, including without limitation special, consequential or incidental damages. "Typical" parameters which may be provided in SCILLC data sheets and/or specifications can and do vary in different applications and actual performance may vary over time. All operating parameters, including "Typicals" must be validated for each customer application by customer's technical experts. SCILLC does not convey any license under its patent rights nor the rights of others. SCILLC products are not designed, intended, or authorized for use as components in systems intended for surgical implant into the body, or other applications intended to support or sustain life, or for any other application in which the failure of the SCILLC product could create a situation where personal injury or death may occur. Should Buyer purchase or use SCILLC products for any such unintended or unauthorized application, Buyer shall indemnify and hold SCILLC and its officers, employees, subsidiaries, affiliates, and distributors harmless against all claims, costs, damages, and expenses, and reasonable attorney fees arising out of, directly or indirectly, any claim of personal injury or death associated with such unintended or unauthorized use, even if such claim alleges that SCILLC was negligent regarding the design or manufacture of the part. SCILLC is an Equal Opportunity/Affirmative Action Employer. This literature is subject to all applicable copyright laws and is not for resale in any manner.

PUBLICATION ORDERING INFORMATION

LITERATURE FULFILLMENT:
Literature Distribution Center for ON Semiconductor
P.O. Box 5163, Denver, Colorado 80217 USA
Phone: 303−675−2175 or 800−344−3860 Toll Free USA/Canada
Fax: 303−675−2176 or 800−344−3867 Toll Free USA/Canada
Email: orderlit@onsemi.com

N. American Technical Support: 800−282−9855 Toll Free USA/Canada
Europe, Middle East and Africa Technical Support:
Phone: 421 33 790 2910
Japan Customer Focus Center
Phone: 81−3−5817−1050

ON Semiconductor Website: **www.onsemi.com**

Order Literature: http://www.onsemi.com/orderlit

For additional information, please contact your local Sales Representative