chanhvinh.com

MJD122, NJVMJD122 (NPN), MJD127, NJVMJD127 (PNP)

Complementary Darlington Power Transistor

DPAK For Surface Mount Applications

Designed for general purpose amplifier and low speed switching applications.

Features

- Lead Formed for Surface Mount Applications in Plastic Sleeves
- Surface Mount Replacements for 2N6040−2N6045 Series, TIP120−TIP122 Series, and TIP125−TIP127 Series
- Monolithic Construction With Built−in Base−Emitter Shunt Resistors
- High DC Current Gain: h_{FE} = 2500 (Typ) @ I_C = 4.0 Adc
- Epoxy Meets UL 94 V−0 @ 0.125 in
- ESD Ratings:
  - Human Body Model, 3B > 8000 V
  - Machine Model, C > 400 V
- NJV Prefix for Automotive and Other Applications Requiring Unique Site and Control Change Requirements; AEC−Q101 Qualified and PPAP Capable
- These Devices are Pb−Free, Halogen Free/BFR Free and are RoHS Compliant

ON Semiconductor®

www.onsemi.com

SILICON
POWER TRANSISTOR
8 AMPERES
100 VOLTS, 20 WATTS

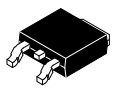

DPAK
CASE 369C
STYLE 1

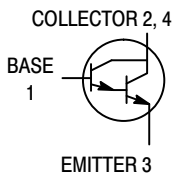

MARKING DIAGRAM

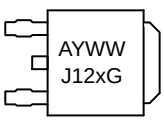

A = Assembly Location
Y = Year
WW = Work Week
x = 2 or 7
G = Pb−Free Package

ORDERING INFORMATION

See detailed ordering and shipping information in the package dimensions section on page 7 of this data sheet.

© Semiconductor Components Industries, LLC, 2013

chanhvinh.com

MAXIMUM RATINGS

Rating	Symbol	Value	Unit
Collector−Emitter Voltage	V_{CEO}	100	Vdc
Collector−Base Voltage	V_{CB}	100	Vdc
Emitter−Base Voltage	V_{EB}	5	Vdc
Collector Current Continuous Peak	I_C	 8 16	Adc
Base Current	I_B	120	mAdc
Total Power Dissipation @ T_C = 25°C Derate above 25°C	P_D	 20 0.16	W W/°C
Total Power Dissipation (Note 1) @ T_A = 25°C Derate above 25°C	P_D	 1.75 0.014	 W W/°C
Operating and Storage Junction Temperature Range	T_J, T_{stg}	−65 to +150	°C

Stresses exceeding those listed in the Maximum Ratings table may damage the device. If any of these limits are exceeded, device functionality should not be assumed, damage may occur and reliability may be affected.

THERMAL CHARACTERISTICS

Characteristic	Symbol	Max	Unit
Thermal Resistance, Junction−to−Case	$R_{\theta JC}$	6.25	°C/W
Thermal Resistance, Junction−to−Ambient (Note1)	$R_{\theta JA}$	71.4	°C/W

1. These ratings are applicable when surface mounted on the minimum pad sizes recommended.

chanhvinh.com

ELECTRICAL CHARACTERISTICS (T_C = 25°C unless otherwise noted)

Characteristic	Symbol	Min	Max	Unit
OFF CHARACTERISTICS				
Collector−Emitter Sustaining Voltage (I_C = 30 mAdc, I_B = 0)	$V_{CEO(sus)}$	100	–	Vdc
Collector Cutoff Current (V_{CE} = 50 Vdc, I_B = 0)	I_{CEO}	–	10	μAdc
Collector Cutoff Current (V_{CB} = 100 Vdc, I_E = 0)	I_{CBO}	–	10	μAdc
Emitter Cutoff Current (V_{BE} = 5 Vdc, I_C = 0)	I_{EBO}	–	2	mAdc
ON CHARACTERISTICS				
DC Current Gain (I_C = 4 Adc, V_{CE} = 4 Vdc) (I_C = 8 Adc, V_{CE} = 4 Vdc)	h_{FE}	1000 100	12,000 –	–
Collector−Emitter Saturation Voltage (I_C = 4 Adc, I_B = 16 mAdc) (I_C = 8 Adc, I_B = 80 mAdc)	$V_{CE(sat)}$	– –	2 4	Vdc
Base−Emitter Saturation Voltage (Note 2) (I_C = 8 Adc, I_B = 80 mAdc)	$V_{BE(sat)}$	–	4.5	Vdc
Base−Emitter On Voltage (I_C = 4 Adc, V_{CE} = 4 Vdc)	$V_{BE(on)}$	–	2.8	Vdc
DYNAMIC CHARACTERISTICS				
Current−Gain−Bandwidth Product (I_C = 3 Adc, V_{CE} = 4 Vdc, f = 1 MHz)	$\|h_{fe}\|$	4	–	MHz
Output Capacitance (V_{CB} = 10 Vdc, I_E = 0, f = 0.1 MHz) MJD127, NJVMJD127 MJD122, NJVMJD122	C_{ob}	 – –	 300 200	pF
Small−Signal Current Gain (I_C = 3 Adc, V_{CE} = 4 Vdc, f = 1 kHz)	h_{fe}	300	–	–

Product parametric performance is indicated in the Electrical Characteristics for the listed test conditions, unless otherwise noted. Product performance may not be indicated by the Electrical Characteristics if operated under different conditions.

2. Pulse Test: Pulse Width ≤ 300 μs, Duty Cycle ≤ 2%.

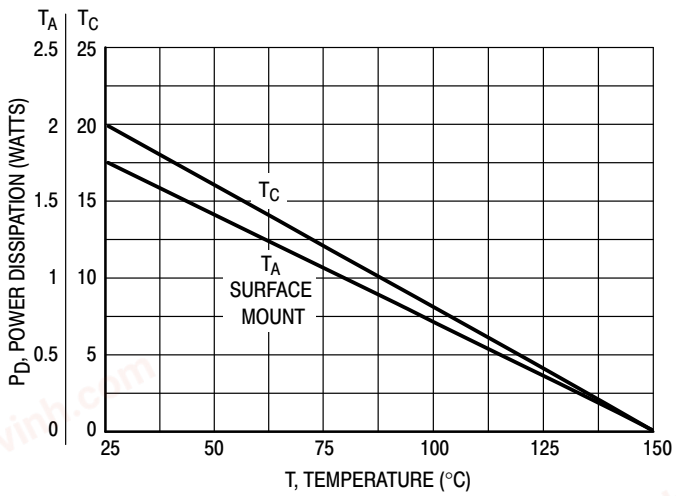

Figure 1. Power Derating

chanhvinh.com

TYPICAL ELECTRICAL CHARACTERISTICS

PNP MJD127 **NPN MJD122**

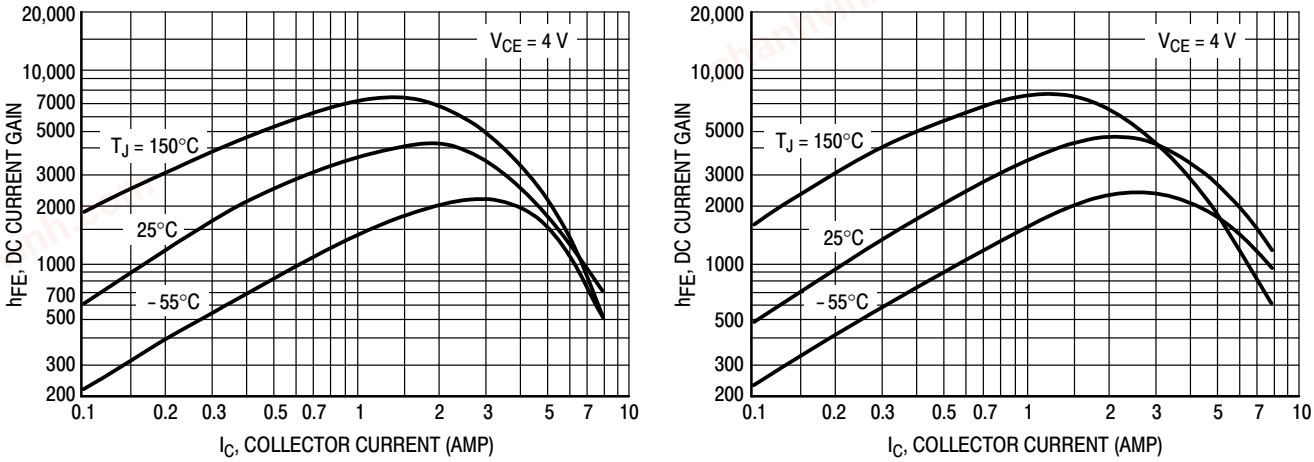

Figure 2. DC Current Gain

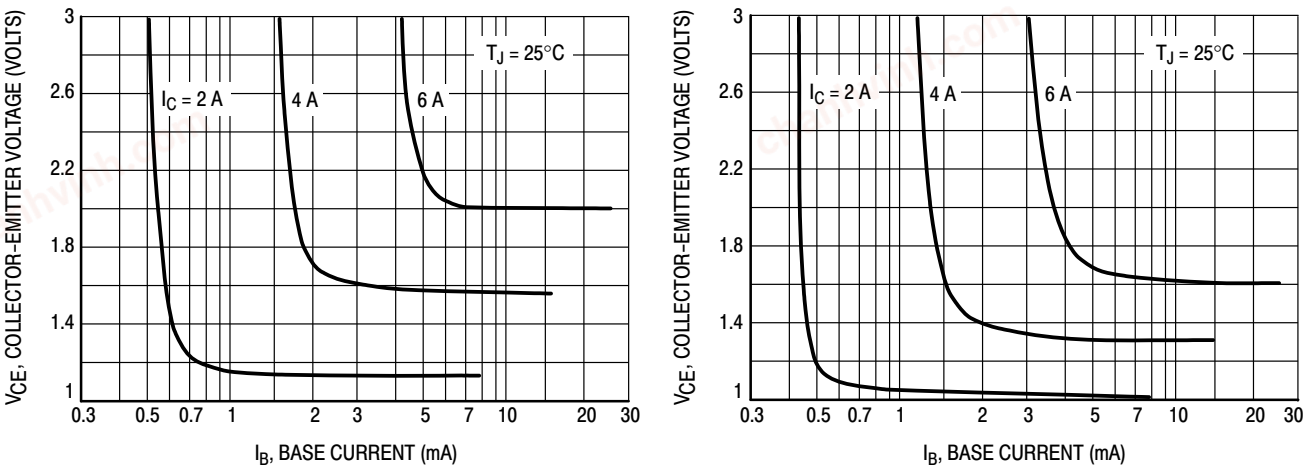

Figure 3. Collector Saturation Region

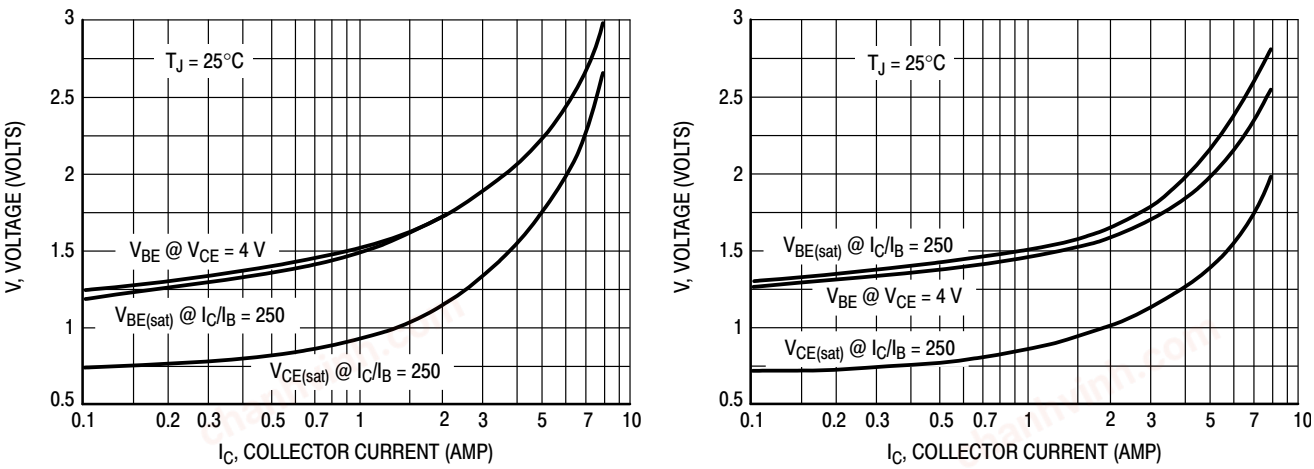

Figure 4. “On” Voltages

chanhvinh.com

TYPICAL ELECTRICAL CHARACTERISTICS

PNP MJD127

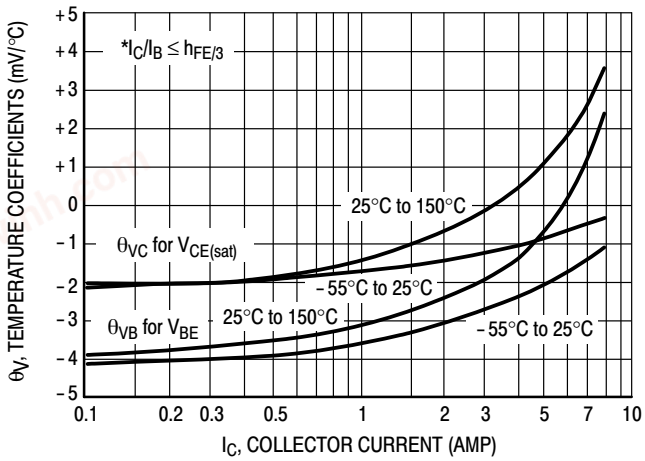

NPN MJD122

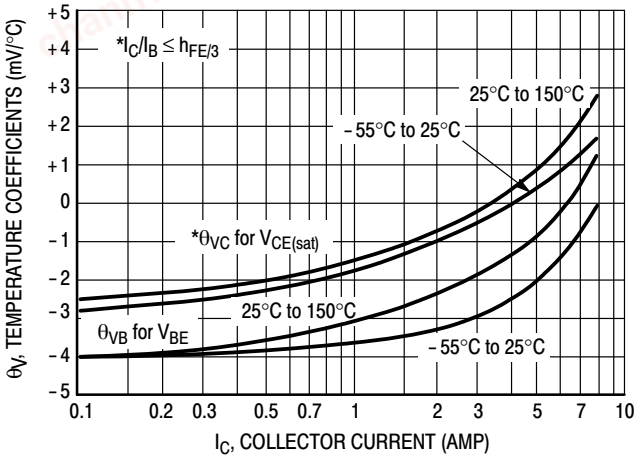

Figure 5. Temperature Coefficients

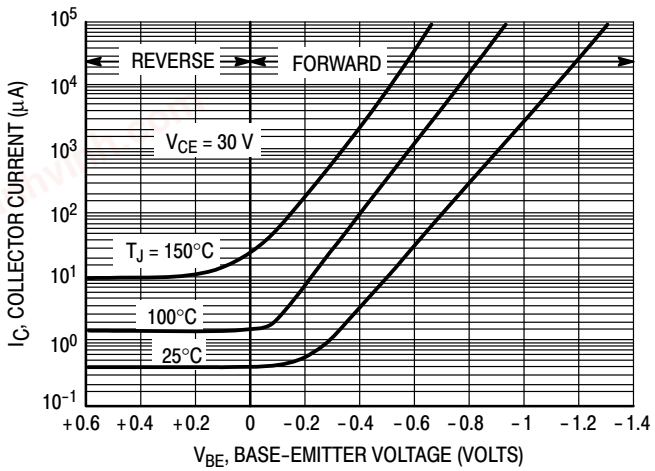

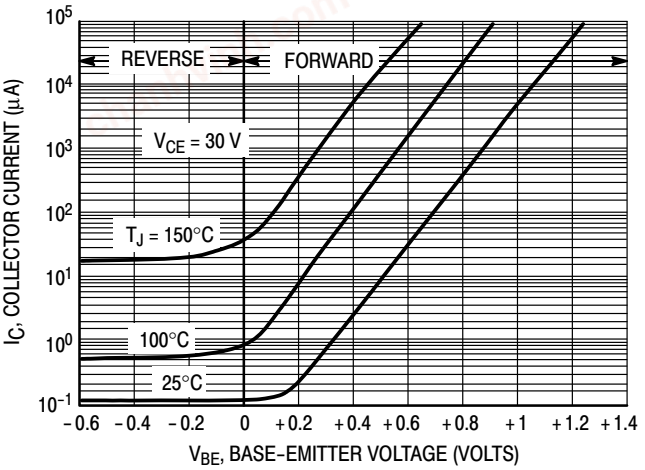

Figure 6. Collector Cut−Off Region

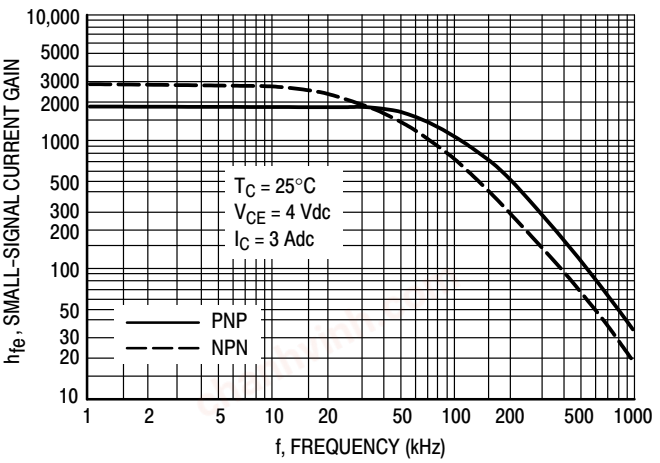

Figure 7. Small−Signal Current Gain

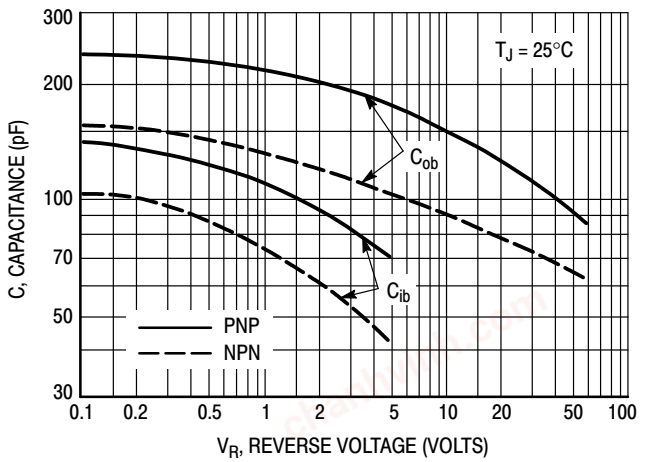

Figure 8. Capacitance

chanhvinh.com

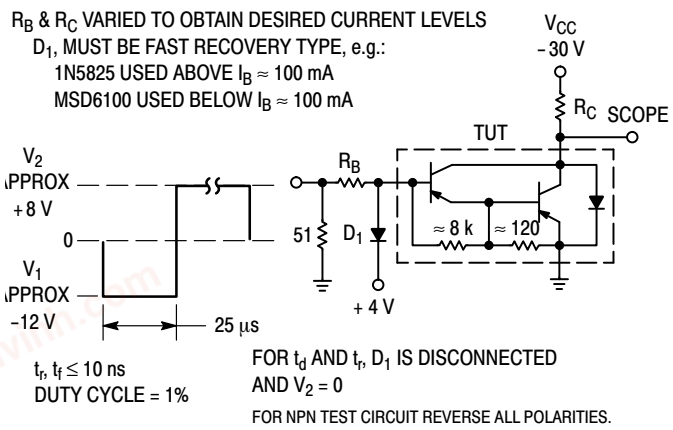

Figure 9. Switching Times Test Circuit

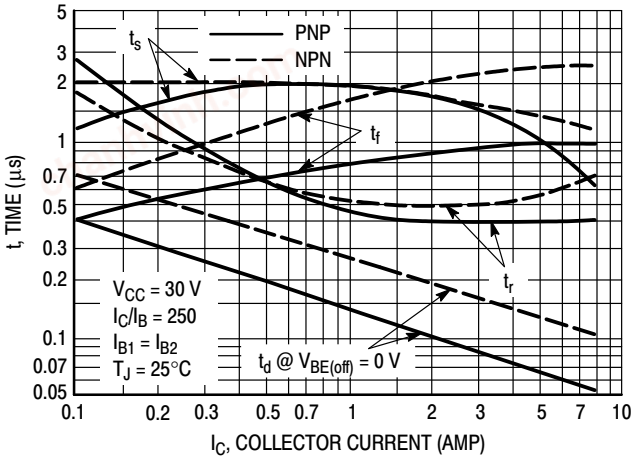

Figure 10. Switching Times

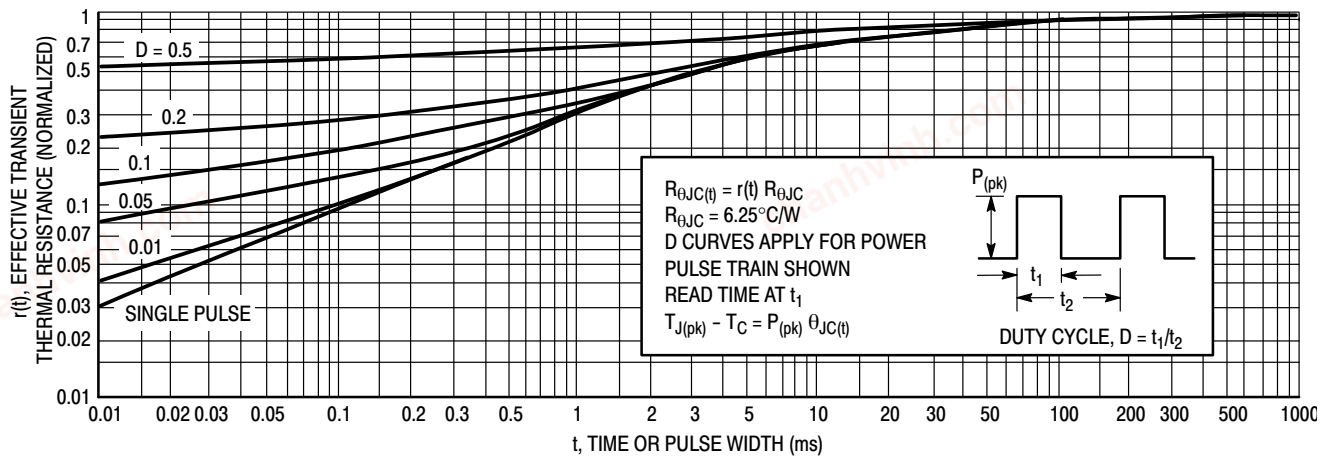

Figure 11. Thermal Response

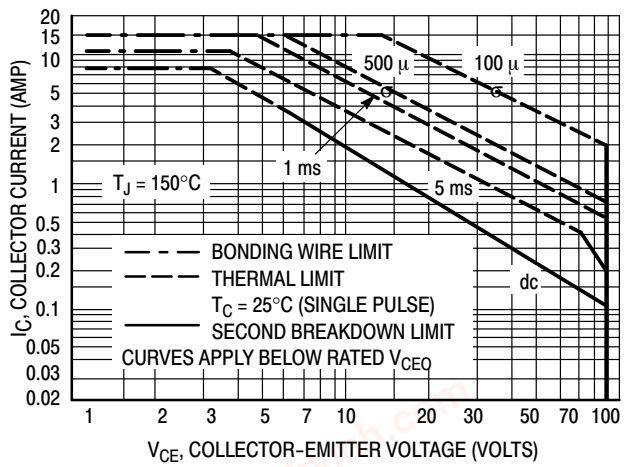

Figure 12. Maximum Forward Bias Safe Operating rea

There are two limitations on the power handling ability of a transistor: average junction temperature and second breakdown. Safe operating area curves indicate $I_C - V_{CE}$ limits of the transistor that must be observed for reliable operation; i.e., the transistor must not be subjected to greater dissipation than the curves indicate.

The data of Figure 12 is based on $T_{J(pk)} = 150°C$; T_C is variable depending on conditions. Second breakdown pulse limits are valid for duty cycles to 10% provided $T_{J(pk)} < 150°C$. $T_{J(pk)}$ may be calculated from the data in Figure 11. At high case temperatures, thermal limitations will reduce the power that can be handled to values less than the limitations imposed by second breakdown.

chanhvinh.com

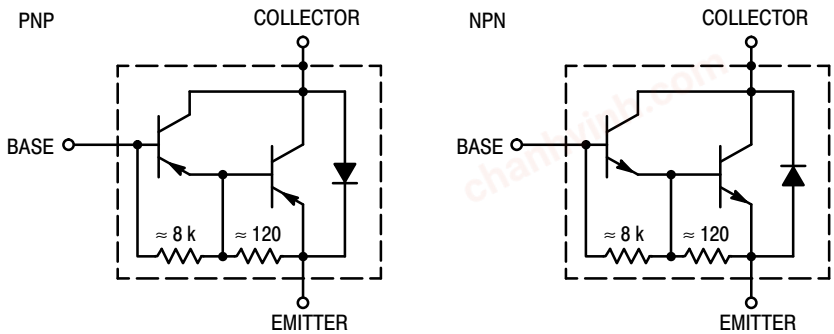

Figure 13. Darlington Schematic

ORDERING INFORMATION

Device	Package Type	Shipping†
MJD122G	DPAK (Pb−Free)	75 Units / Rail
MJD122T4G	DPAK (Pb−Free)	2,500 / Tape & Reel
NJVMJD122T4G*	DPAK (Pb−Free)	2,500 / Tape & Reel
MJD127G	DPAK (Pb−Free)	75 Units / Rail
MJD127T4G	DPAK (Pb−Free)	2,500 / Tape & Reel
NJVMJD127T4G*	DPAK (Pb−Free)	2,500 / Tape & Reel

†For information on tape and reel specifications, including part orientation and tape sizes, please refer to our Tape and Reel Packaging Specifications Brochure, BRD8011/D.

*NJV Prefix for Automotive and Other Applications Requiring Unique Site and Control Change Requirements; AEC−Q101 Qualified and PPAP Capable

chanhvinh.com

MJD122, NJVMJD122 (NPN), MJD127, NJVMJD127 (PNP)

PACKAGE DIMENSIONS

DPAK (SINGLE GAUGE)
CASE 369C
ISSUE F

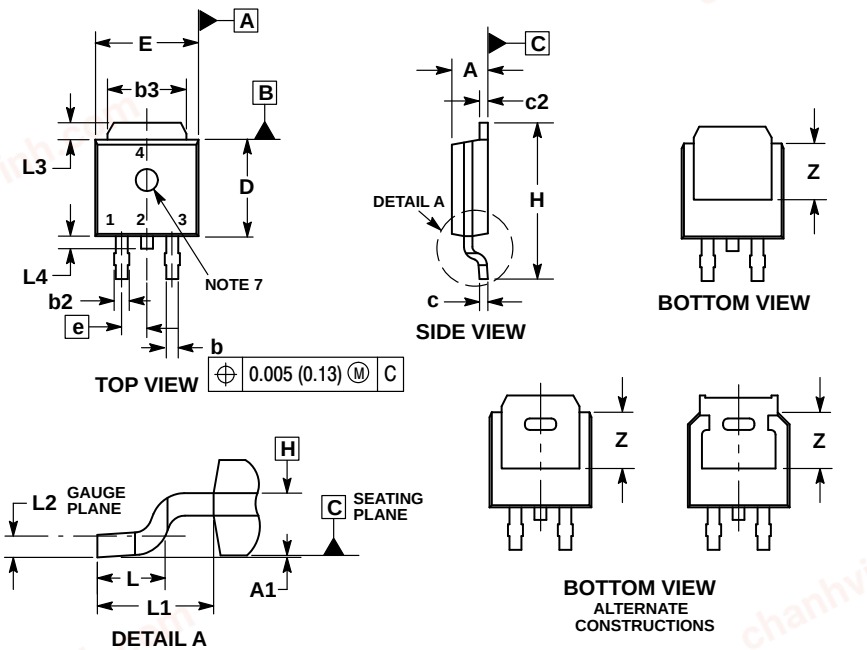

NOTES:
1. DIMENSIONING AND TOLERANCING PER ASME Y14.5M, 1994.
2. CONTROLLING DIMENSION: INCHES.
3. THERMAL PAD CONTOUR OPTIONAL WITHIN DIMENSIONS b3, L3 and Z.
4. DIMENSIONS D AND E DO NOT INCLUDE MOLD FLASH, PROTRUSIONS, OR BURRS. MOLD FLASH, PROTRUSIONS, OR GATE BURRS SHALL NOT EXCEED 0.006 INCHES PER SIDE.
5. DIMENSIONS D AND E ARE DETERMINED AT THE OUTERMOST EXTREMES OF THE PLASTIC BODY.
6. DATUMS A AND B ARE DETERMINED AT DATUM PLANE H.
7. OPTIONAL MOLD FEATURE.

	INCHES		MILLIMETERS	
DIM	MIN	MAX	MIN	MAX
A	0.086	0.094	2.18	2.38
A1	0.000	0.005	0.00	0.13
b	0.025	0.035	0.63	0.89
b2	0.028	0.045	0.72	1.14
b3	0.180	0.215	4.57	5.46
c	0.018	0.024	0.46	0.61
c2	0.018	0.024	0.46	0.61
D	0.235	0.245	5.97	6.22
E	0.250	0.265	6.35	6.73
e	0.090 BSC		2.29 BSC	
H	0.370	0.410	9.40	10.41
L	0.055	0.070	1.40	1.78
L1	0.114 REF		2.90 REF	
L2	0.020 BSC		0.51 BSC	
L3	0.035	0.050	0.89	1.27
L4	---	0.040	---	1.01
Z	0.155	---	3.93	---

STYLE 1:
PIN 1. BASE
2. COLLECTOR
3. EMITTER
4. COLLECTOR

SOLDERING FOOTPRINT*

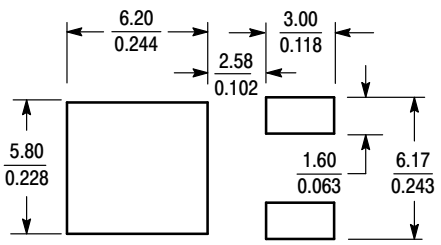

SCALE 3:1 (mm / inches)

*For additional information on our Pb−Free strategy and soldering details, please download the ON Semiconductor Soldering and Mounting Techniques Reference Manual, SOLDERRM/D.

ON Semiconductor and ON are trademarks of Semiconductor Components Industries, LLC dba ON Semiconductor or its subsidiaries in the United States and/or other countries. ON Semiconductor owns the rights to a number of patents, trademarks, copyrights, trade secrets, and other intellectual property. A listing of ON Semiconductor's product/patent coverage may be accessed at www.onsemi.com/site/pdf/Patent−Marking.pdf. ON Semiconductor reserves the right to make changes without further notice to any products herein. ON Semiconductor makes no warranty, representation or guarantee regarding the suitability of its products for any particular purpose, nor does ON Semiconductor assume any liability arising out of the application or use of any product or circuit, and specifically disclaims any and all liability, including without limitation special, consequential or incidental damages. Buyer is responsible for its products and applications using ON Semiconductor products, including compliance with all laws, regulations and safety requirements or standards, regardless of any support or applications information provided by ON Semiconductor. "Typical" parameters which may be provided in ON Semiconductor data sheets and/or specifications can and do vary in different applications and actual performance may vary over time. All operating parameters, including "Typicals" must be validated for each customer application by customer's technical experts. ON Semiconductor does not convey any license under its patent rights nor the rights of others. ON Semiconductor products are not designed, intended, or authorized for use as a critical component in life support systems or any FDA Class 3 medical devices or medical devices with a same or similar classification in a foreign jurisdiction or any devices intended for implantation in the human body. Should Buyer purchase or use ON Semiconductor products for any such unintended or unauthorized application, Buyer shall indemnify and hold ON Semiconductor and its officers, employees, subsidiaries, affiliates, and distributors harmless against all claims, costs, damages, and expenses, and reasonable attorney fees arising out of, directly or indirectly, any claim of personal injury or death associated with such unintended or unauthorized use, even if such claim alleges that ON Semiconductor was negligent regarding the design or manufacture of the part. ON Semiconductor is an Equal Opportunity/Affirmative Action Employer. This literature is subject to all applicable copyright laws and is not for resale in any manner.

PUBLICATION ORDERING INFORMATION

LITERATURE FULFILLMENT:
Literature Distribution Center for ON Semiconductor
19521 E. 32nd Pkwy, Aurora, Colorado 80011 USA
Phone: 303−675−2175 or 800−344−3860 Toll Free USA/Canada
Fax: 303−675−2176 or 800−344−3867 Toll Free USA/Canada
Email: orderlit@onsemi.com

N. American Technical Support: 800−282−9855 Toll Free USA/Canada
Europe, Middle East and Africa Technical Support:
Phone: 421 33 790 2910
Japan Customer Focus Center
Phone: 81−3−5817−1050

ON Semiconductor Website: **www.onsemi.com**

Order Literature: http://www.onsemi.com/orderlit

For additional information, please contact your local Sales Representative