chanhvinh.com

MC74LCX245

Low-Voltage CMOS Octal Transceiver

With 5 V−Tolerant Inputs and Outputs (3−State, Non−Inverting)

The MC74LCX245 is a high performance, non−inverting octal transceiver operating from a 2.0 to 5.5 V supply. High impedance TTL compatible inputs significantly reduce current loading to input drivers while TTL compatible outputs offer improved switching noise performance. A V_I specification of 5.5 V allows MC74LCX245 inputs to be safely driven from 5 V devices if V_{CC} is less than 5.0 V. The MC74LCX245 is suitable for memory address driving and all TTL level bus oriented transceiver applications.

Current drive capability is 24 mA at both A and B ports. The Transmit/Receive (T/$\overline{R}$) input determines the direction of data flow through the bi−directional transceiver. Transmit (active−HIGH) enables data from A ports to B ports; Receive (active−LOW) enables data from B to A ports. The Output Enable input, when HIGH, disables both A and B ports by placing them in a HIGH Z condition.

Features

- Designed for 2.0 to 5.5 V V_{CC} Operation
- 5 V Tolerant − Interface Capability With 5 V TTL Logic
- Supports Live Insertion and Withdrawal
- I_{OFF} Specification Guarantees High Impedance When V_{CC} = 0 V
- LVTTL Compatible
- LVCMOS Compatible
- 24 mA Balanced Output Sink and Source Capability
- Near Zero Static Supply Current in All Three Logic States (10 μA) Substantially Reduces System Power Requirements
- Latchup Performance Exceeds 500 mA
- ESD Performance: Human Body Model >2000 V
  Machine Model >200 V
- NLV Prefix for Automotive and Other Applications Requiring Unique Site and Control Change Requirements; AEC−Q100 Qualified and PPAP Capable
- These Devices are Pb−Free, Halogen Free/BFR Free and are RoHS Compliant

*For additional information on our Pb−Free strategy and soldering details, please download the ON Semiconductor Soldering and Mounting Techniques Reference Manual, SOLDERRM/D.

ON Semiconductor®

http://onsemi.com

MARKING DIAGRAMS

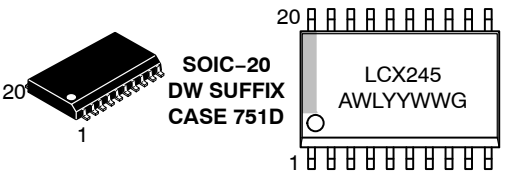

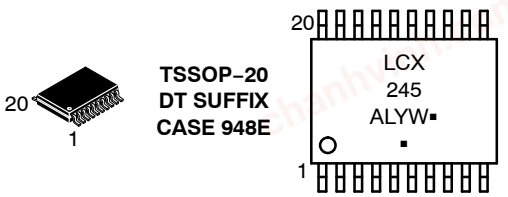

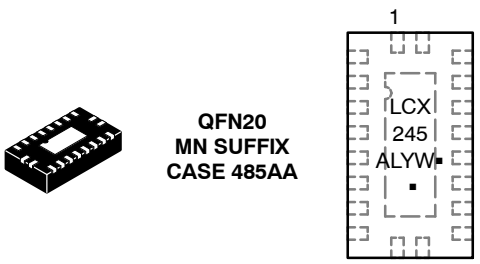

A	=	Assembly Location
L, WL	=	Wafer Lot
Y, YY	=	Year
W, WW	=	Work Week
G or ▪	=	Pb−Free Package

(Note: Microdot may be in either location)

ORDERING INFORMATION

See detailed ordering and shipping information in the package dimensions section on page 6 of this data sheet.

© Semiconductor Components Industries, LLC, 2012

chanhvinh.com

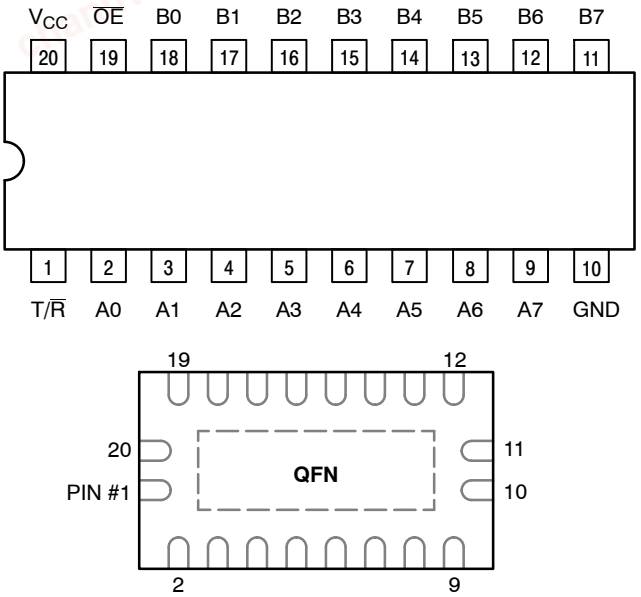

Figure 1. Pinout (Top View)

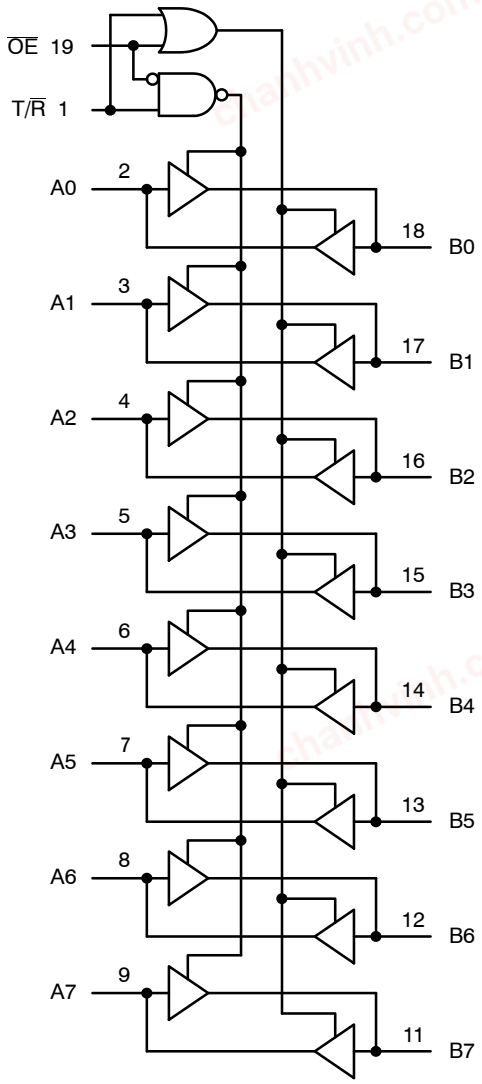

Figure 2. Logic Diagram

PIN NAMES

PINS	FUNCTION
$\overline{OE}$	Output Enable Input
T/$\overline{R}$	Transmit/Receive Input
A0–A7	Side A 3–State Inputs or 3–State Outputs
B0–B7	Side B 3–State Inputs or 3–StateOutputs

TRUTH TABLE

INPUTS		OPERATING MODE Non–Inverting
$\overline{OE}$	T/$\overline{R}$	
L	L	B Data to A Bus
L	H	A Data to B Bus
H	X	Z

H = High Voltage Level
L = Low Voltage Level
Z = High Impedance State
X = High or Low Voltage Level and Transitions are Acceptable
For I_{CC} reasons, Do Not Float Inputs

chanhvinh.com

MAXIMUM RATINGS

Symbol	Parameter	Value	Condition	Unit
V_{CC}	DC Supply Voltage	−0.5 to +7.0		V
V_I	DC Input Voltage	$-0.5 \le V_I \le +7.0$		V
V_O	DC Output Voltage	$-0.5 \le V_O \le +7.0$	Output in 3−State	V
		$-0.5 \le V_O \le V_{CC} + 0.5$	Output in HIGH or LOW State (Note 1)	V
I_{IK}	DC Input Diode Current	−50	$V_I <$ GND	mA
I_{OK}	DC Output Diode Current	−50	$V_O <$ GND	mA
		+50	$V_O > V_{CC}$	mA
I_O	DC Output Source/Sink Current	±50		mA
I_{CC}	DC Supply Current Per Supply Pin	±100		mA
I_{GND}	DC Ground Current Per Ground Pin	±100		mA
T_{STG}	Storage Temperature Range	−65 to +150		°C
MSL	Moisture Sensitivity		Level 1	

Stresses exceeding Maximum Ratings may damage the device. Maximum Ratings are stress ratings only. Functional operation above the Recommended Operating Conditions is not implied. Extended exposure to stresses above the Recommended Operating Conditions may affect device reliability.

1. I_O absolute maximum rating must be observed.

RECOMMENDED OPERATING CONDITIONS

Symbol	Parameter		Min	Typ	Max	Unit
V_{CC}	Supply Voltage	Operating Data Retention Only	2.0 1.5	2.5, 3.3 2.5, 3.3	5.5 5.5	V
V_I	Input Voltage		0		5.5	V
V_O	Output Voltage	(HIGH or LOW State) (3−State)	0 0		V_{CC} 5.5	V
I_{OH}	HIGH Level Output Current	V_{CC} = 3.0 V − 3.6 V V_{CC} = 2.7 V − 3.0 V V_{CC} = 2.3 V − 2.7 V			− 24 − 12 − 8	mA
I_{OL}	LOW Level Output Current	V_{CC} = 3.0 V − 3.6 V V_{CC} = 2.7 V − 3.0 V V_{CC} = 2.3 V − 2.7 V			+ 24 + 12 + 8	mA
T_A	Operating Free−Air Temperature		−55		+125	°C
$\Delta t/\Delta V$	Input Transition Rise or Fall Rate, V_{IN} from 0.8 V to 2.0 V, V_{CC} = 3.0 V		0		10	ns/V

chanhvinh.com

DC ELECTRICAL CHARACTERISTICS

Symbol	Characteristic	Condition	T_A = −55°C to +125°C Min	Max	Unit
V_{IH}	HIGH Level Input Voltage (Note 2)	2.3 V ≤ V_{CC} ≤ 2.7 V	1.7		V
		2.7 V ≤ V_{CC} ≤ 3.6 V	2.0		
V_{IL}	LOW Level Input Voltage (Note 2)	2.3 V ≤ V_{CC} ≤ 2.7 V		0.7	V
		2.7 V ≤ V_{CC} ≤ 3.6 V		0.8	
V_{OH}	HIGH Level Output Voltage	2.3 V ≤ V_{CC} ≤ 3.6 V; I_{OL} = 100 μA	V_{CC} − 0.2		V
		V_{CC} = 2.3 V; I_{OH} = −8 mA	1.8		
		V_{CC} = 2.7 V; I_{OH} = −12 mA	2.2		
		V_{CC} = 3.0 V; I_{OH} = −18 mA	2.4		
		V_{CC} = 3.0 V; I_{OH} = −24 mA	2.2		
V_{OL}	LOW Level Output Voltage	2.3 V ≤ V_{CC} ≤ 3.6 V; I_{OL} = 100 μA		0.2	V
		V_{CC} = 2.3 V; I_{OL}= 8 mA		0.6	
		V_{CC} = 2.7 V; I_{OL}= 12 mA		0.4	
		V_{CC} = 3.0 V; I_{OL} = 16 mA		0.4	
		V_{CC} = 3.0 V; I_{OL} = 24 mA		0.55	
I_{OZ}	3−State Output Current	V_{CC} = 3.6 V, V_{IN} = V_{IH} or V_{IL}, V_{OUT} = 0 to 5.5 V		±5	μA
I_{OFF}	Power Off Leakage Current	V_{CC} = 0, V_{IN} = 5.5 V or V_{OUT} = 5.5 V		10	μA
I_{IN}	Input Leakage Current	V_{CC} = 3.6 V, V_{IN} = 5.5 V or GND		±5	μA
I_{CC}	Quiescent Supply Current	V_{CC} = 3.6 V, V_{IN} = 5.5 V or GND		10	μA
ΔI_{CC}	Increase in I_{CC} per Input	2.3 ≤ V_{CC} ≤ 3.6 V; V_{IH} = V_{CC} − 0.6 V		500	μA

2. These values of V_I are used to test DC electrical characteristics only.

AC CHARACTERISTICS $t_R = t_F$ = 2.5 ns; R_L = 500 Ω

Symbol	Parameter	Waveform	Limits T_A = −55°C to +125°C V_{CC} = 3.3 V ± 0.3V, C_L = 50 pF Min	Max	V_{CC} = 2.7 V, C_L = 50 pF Min	Max	V_{CC} = 2.5 V ± 0.2V, C_L = 30 pF Min	Max	V_{CC} = 5.0 V, C_L = 50 pF Min	Max	Unit
t_{PLH} t_{PHL}	Propagation Delay Input to Output	1	1.5 1.5	7.0 7.0	1.5 1.5	8.0 8.0	1.5 1.5	8.4 8.4	1.5 1.5	5.0 5.0	ns
t_{PZH} t_{PZL}	Output Enable Time to High and Low Level	2	1.5 1.5	8.5 8.5	1.5 1.5	9.5 9.5	1.5 1.5	10.5 10.5	1.5 1.5	7.0 7.0	ns
t_{PHZ} t_{PLZ}	Output Disable Time From High and Low Level	2	1.5 1.5	7.5 7.5	1.5 1.5	8.5 8.5	1.5 1.5	9.0 9.0	1.5 1.5	6.0 6.0	ns
t_{OSHL} t_{OSLH}	Output−to−Output Skew (Note 3)			1.0 1.0		1.0 1.0		1.0 1.0		1.0 1.0	ns

3. Skew is defined as the absolute value of the difference between the actual propagation delay for any two separate outputs of the same device. The specification applies to any outputs switching in the same direction, either HIGH−to−LOW (t_{OSHL}) or LOW−to−HIGH (t_{OSLH}); parameter guaranteed by design.

chanhvinh.com

DYNAMIC SWITCHING CHARACTERISTICS

Symbol	Characteristic	Condition	T_A = +25°C			Unit
			Min	Typ	Max	
V_{OLP}	Dynamic LOW Peak Voltage (Note 4)	V_{CC} = 3.3 V, C_L = 50 pF, V_{IH} = 3.3 V, V_{IL} = 0 V V_{CC} = 2.5 V, C_L = 30 pF, V_{IH} = 2.5 V, V_{IL} = 0 V		0.8 0.6		V V
V_{OLV}	Dynamic LOW Valley Voltage (Note 4)	V_{CC} = 3.3 V, C_L = 50 pF, V_{IH} = 3.3 V, V_{IL} = 0 V V_{CC} = 2.5 V, C_L = 30 pF, V_{IH} = 2.5 V, V_{IL} = 0 V		−0.8 −0.6		V V

4. Number of outputs defined as “n”. Measured with “n−1” outputs switching from HIGH−to−LOW or LOW−to−HIGH. The remaining output is measured in the LOW state.

CAPACITIVE CHARACTERISTICS

Symbol	Parameter	Condition	Typical	Unit
C_{IN}	Input Capacitance	V_{CC} = 3.3 V, V_I = 0 V or V_{CC}	7	pF
$C_{I/O}$	Input/Output Capacitance	V_{CC} = 3.3 V, V_I = 0 V or V_{CC}	8	pF
C_{PD}	Power Dissipation Capacitance	10 MHz, V_{CC} = 3.3 V, V_I = 0 V or V_{CC}	25	pF

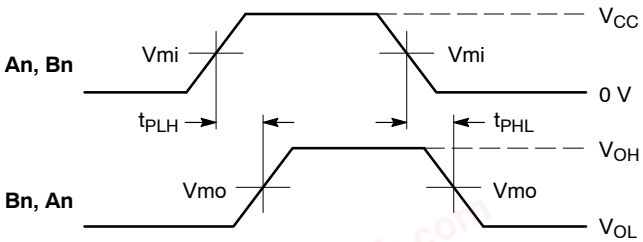

WAVEFORM 1 – PROPAGATION DELAYS
$t_R = t_F$ = 2.5 ns, 10% to 90%; f = 1 MHz; t_W = 500 ns

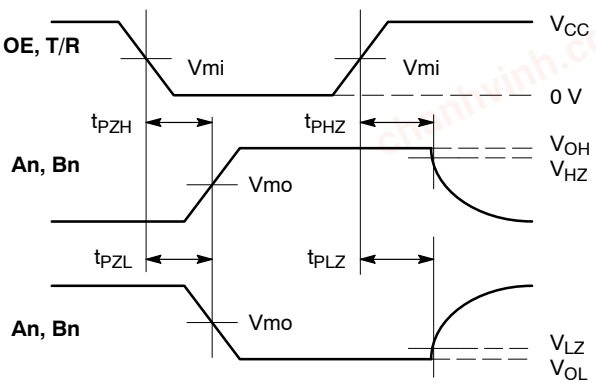

WAVEFORM 2 – OUTPUT ENABLE AND DISABLE TIMES
$t_R = t_F$ = 2.5 ns, 10% to 90%; f = 1 MHz; t_W = 500 ns

Figure 3. AC Waveforms

Symbol	V_{CC}			
	3.3 V ± 0.3 V	2.7 V	2.5 V ± 0.2 V	5.0 V
Vmi	1.5 V	1.5 V	V_{CC}/2	V_{CC}/2
Vmo	1.5 V	1.5 V	V_{CC}/2	V_{CC}/2
V_{HZ}	V_{OL} + 0.3 V	V_{OL} + 0.3 V	V_{OL} + 0.15 V	V_{OL} + 0.15 V
V_{LZ}	V_{OH} − 0.3 V	V_{OH} − 0.3 V	V_{OH} − 0.15 V	V_{OH} − 0.15 V

chanhvinh.com

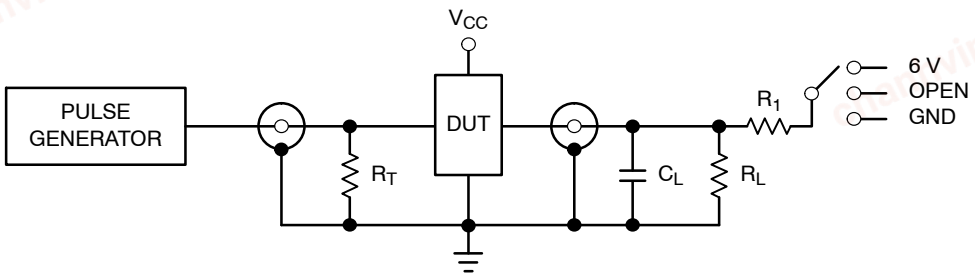

TEST	SWITCH
t_{PLH}, t_{PHL}	Open
t_{PZL}, t_{PLZ}	6 V at V_{CC} = 3.3 ±0.3 V 6 V at V_{CC} = 2.5 ±0.2 V
Open Collector/Drain t_{PLH} and t_{PHL}	6 V
t_{PZH}, t_{PHZ}	GND

C_L = 50 pF at V_{CC} = 3.3 ±0.3 V or equivalent (includes jig and probe capacitance)
C_L = 30 pF at V_{CC} = 2.5 ±0.2 V or equivalent (includes jig and probe capacitance)
R_L = R_1 = 500 Ω or equivalent
R_T = Z_{OUT} of pulse generator (typically 50 Ω)

Figure 4. Test Circuit

ORDERING INFORMATION

Device	Package	Shipping†
MC74LCX245DWR2G	SOIC−20 (Pb−Free)	1000 Tape & Reel
MC74LCX245DWG	SOIC−20 (Pb−Free)	38 Units / Rail
MC74LCX245DTG	TSSOP−20 (Pb−Free)	75 Units / Rail
MC74LCX245DTR2G	TSSOP−20 (Pb−Free)	2500 Tape & Reel
NLV74LCX245DTR2G*	TSSOP−20 (Pb−Free)	2500 Tape & Reel
MC74LCX245MNTWG	QFN20 (Pb−Free)	3000 Tape & Reel

†For information on tape and reel specifications, including part orientation and tape sizes, please refer to our Tape and Reel Packaging Specifications Brochure, BRD8011/D.
*NLV Prefix for Automotive and Other Applications Requiring Unique Site and Control Change Requirements; AEC−Q100 Qualified and PPAP Capable.

chanhvinh.com

PACKAGE DIMENSIONS

SOIC−20
DW SUFFIX
CASE 751D−05
ISSUE G

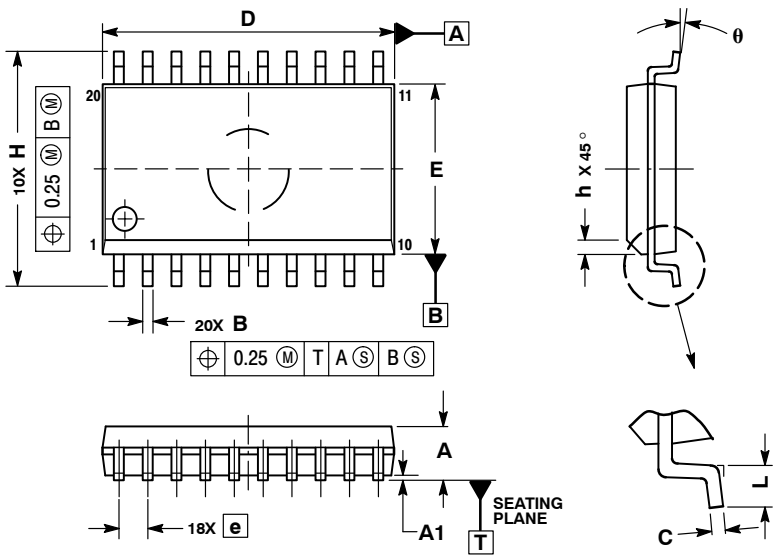

NOTES:
1. DIMENSIONS ARE IN MILLIMETERS.
2. INTERPRET DIMENSIONS AND TOLERANCES PER ASME Y14.5M, 1994.
3. DIMENSIONS D AND E DO NOT INCLUDE MOLD PROTRUSION.
4. MAXIMUM MOLD PROTRUSION 0.15 PER SIDE.
5. DIMENSION B DOES NOT INCLUDE DAMBAR PROTRUSION. ALLOWABLE PROTRUSION SHALL BE 0.13 TOTAL IN EXCESS OF B DIMENSION AT MAXIMUM MATERIAL CONDITION.

	MILLIMETERS	
DIM	MIN	MAX
A	2.35	2.65
A1	0.10	0.25
B	0.35	0.49
C	0.23	0.32
D	12.65	12.95
E	7.40	7.60
e	1.27 BSC	
H	10.05	10.55
h	0.25	0.75
L	0.50	0.90
θ	0°	7°

chanhvinh.com

PACKAGE DIMENSIONS

TSSOP–20
CASE 948E–02
ISSUE C

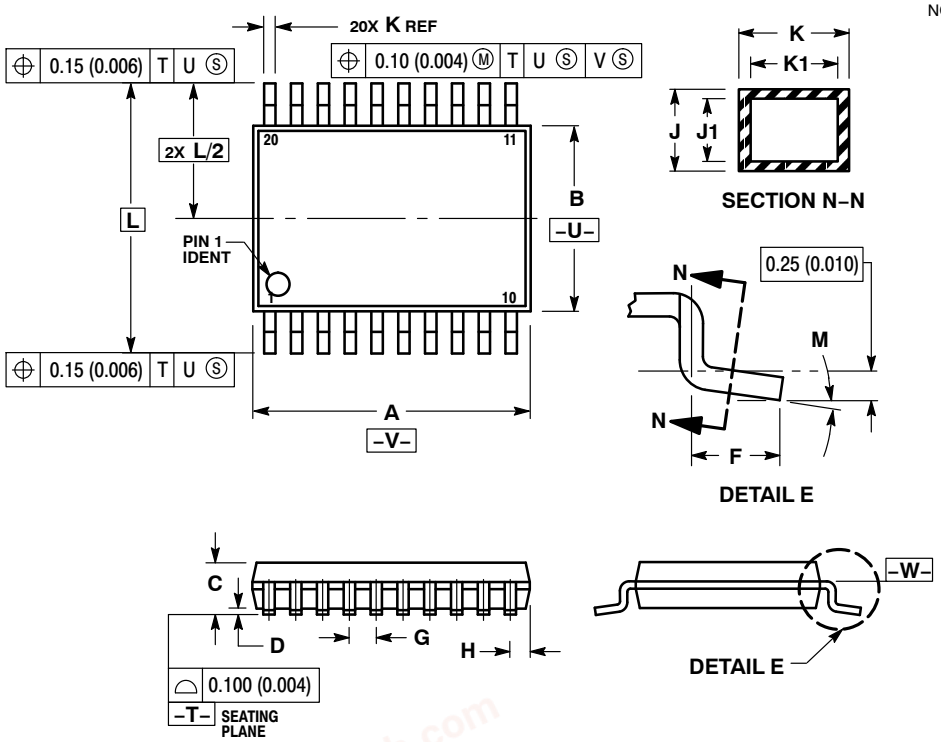

NOTES:
1. DIMENSIONING AND TOLERANCING PER ANSI Y14.5M, 1982.
2. CONTROLLING DIMENSION: MILLIMETER.
3. DIMENSION A DOES NOT INCLUDE MOLD FLASH, PROTRUSIONS OR GATE BURRS. MOLD FLASH OR GATE BURRS SHALL NOT EXCEED 0.15 (0.006) PER SIDE.
4. DIMENSION B DOES NOT INCLUDE INTERLEAD FLASH OR PROTRUSION. INTERLEAD FLASH OR PROTRUSION SHALL NOT EXCEED 0.25 (0.010) PER SIDE.
5. DIMENSION K DOES NOT INCLUDE DAMBAR PROTRUSION. ALLOWABLE DAMBAR PROTRUSION SHALL BE 0.08 (0.003) TOTAL IN EXCESS OF THE K DIMENSION AT MAXIMUM MATERIAL CONDITION.
6. TERMINAL NUMBERS ARE SHOWN FOR REFERENCE ONLY.
7. DIMENSION A AND B ARE TO BE DETERMINED AT DATUM PLANE –W–.

	MILLIMETERS		INCHES	
DIM	MIN	MAX	MIN	MAX
A	6.40	6.60	0.252	0.260
B	4.30	4.50	0.169	0.177
C	---	1.20	---	0.047
D	0.05	0.15	0.002	0.006
F	0.50	0.75	0.020	0.030
G	0.65 BSC		0.026 BSC	
H	0.27	0.37	0.011	0.015
J	0.09	0.20	0.004	0.008
J1	0.09	0.16	0.004	0.006
K	0.19	0.30	0.007	0.012
K1	0.19	0.25	0.007	0.010
L	6.40 BSC		0.252 BSC	
M	0°	8°	0°	8°

SOLDERING FOOTPRINT

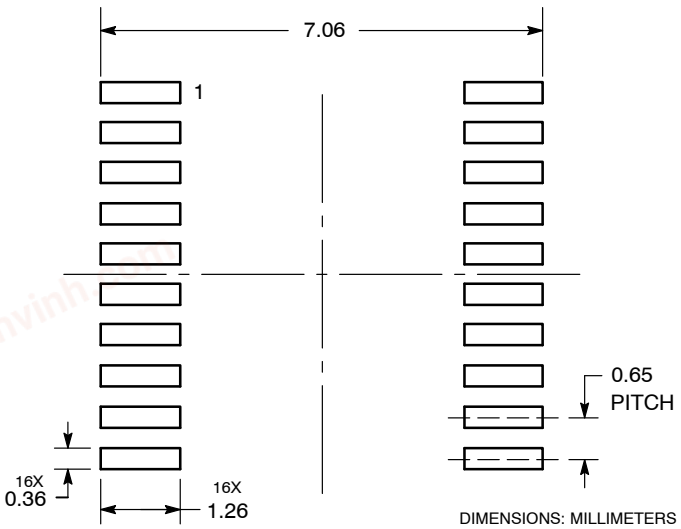

DIMENSIONS: MILLIMETERS

chanhvinh.com

MC74LCX245

PACKAGE DIMENSIONS

QFN20, 2.5x4.5 MM
CASE 485AA
ISSUE B

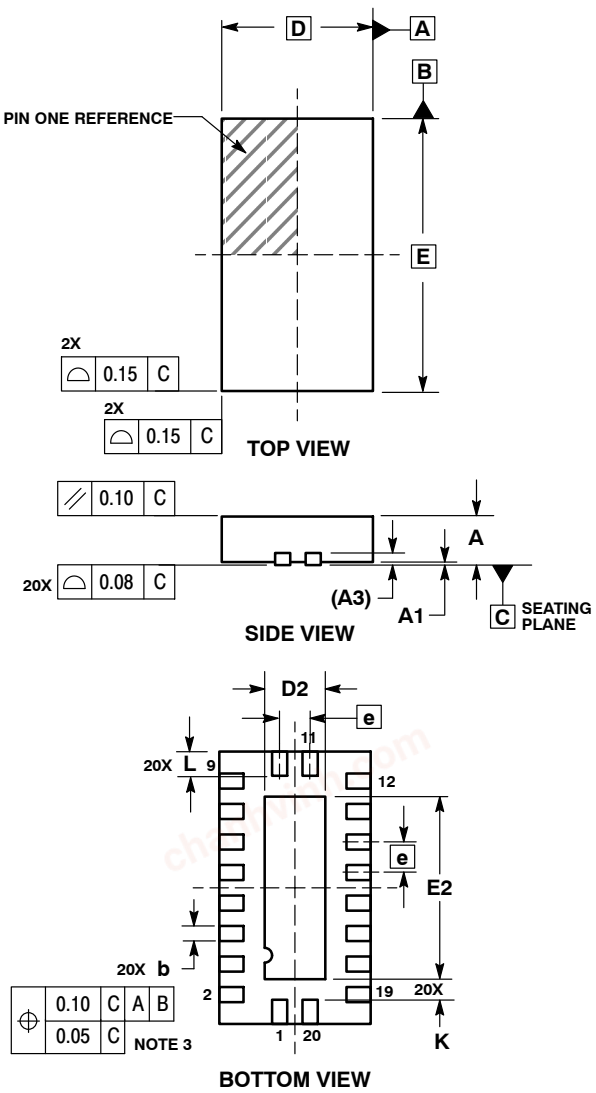

NOTES:
1. DIMENSIONING AND TOLERANCING PER ASME Y14.5M, 1994.
2. CONTROLLING DIMENSION: MILLIMETERS.
3. DIMENSIONS b APPLIES TO PLATED TERMINAL AND IS MEASURED BETWEEN 0.25 AND 0.30 MM FROM TERMINAL.
4. COPLANARITY APPLIES TO THE EXPOSED PAD AS WELL AS THE TERMINALS.

	MILLIMETERS	
DIM	MIN	MAX
A	0.80	1.00
A1	0.00	0.05
A3	0.20 REF	
b	0.20	0.30
D	2.50 BSC	
D2	0.85	1.15
E	4.50 BSC	
E2	2.85	3.15
e	0.50 BSC	
K	0.20	---
L	0.35	0.45

ON Semiconductor and ON are registered trademarks of Semiconductor Components Industries, LLC (SCILLC). SCILLC owns the rights to a number of patents, trademarks, copyrights, trade secrets, and other intellectual property. A listing of SCILLC's product/patent coverage may be accessed at www.onsemi.com/site/pdf/Patent−Marking.pdf. SCILLC reserves the right to make changes without further notice to any products herein. SCILLC makes no warranty, representation or guarantee regarding the suitability of its products for any particular purpose, nor does SCILLC assume any liability arising out of the application or use of any product or circuit, and specifically disclaims any and all liability, including without limitation special, consequential or incidental damages. "Typical" parameters which may be provided in SCILLC data sheets and/or specifications can and do vary in different applications and actual performance may vary over time. All operating parameters, including "Typicals" must be validated for each customer application by customer's technical experts. SCILLC does not convey any license under its patent rights nor the rights of others. SCILLC products are not designed, intended, or authorized for use as components in systems intended for surgical implant into the body, or other applications intended to support or sustain life, or for any other application in which the failure of the SCILLC product could create a situation where personal injury or death may occur. Should Buyer purchase or use SCILLC products for any such unintended or unauthorized application, Buyer shall indemnify and hold SCILLC and its officers, employees, subsidiaries, affiliates, and distributors harmless against all claims, costs, damages, and expenses, and reasonable attorney fees arising out of, directly or indirectly, any claim of personal injury or death associated with such unintended or unauthorized use, even if such claim alleges that SCILLC was negligent regarding the design or manufacture of the part. SCILLC is an Equal Opportunity/Affirmative Action Employer. This literature is subject to all applicable copyright laws and is not for resale in any manner.

PUBLICATION ORDERING INFORMATION

LITERATURE FULFILLMENT:
Literature Distribution Center for ON Semiconductor
P.O. Box 5163, Denver, Colorado 80217 USA
Phone: 303−675−2175 or 800−344−3860 Toll Free USA/Canada
Fax: 303−675−2176 or 800−344−3867 Toll Free USA/Canada
Email: orderlit@onsemi.com

N. American Technical Support: 800−282−9855 Toll Free USA/Canada
Europe, Middle East and Africa Technical Support:
Phone: 421 33 790 2910
Japan Customer Focus Center
Phone: 81−3−5817−1050

ON Semiconductor Website: **www.onsemi.com**

Order Literature: http://www.onsemi.com/orderlit

For additional information, please contact your local Sales Representative

MV74LCX245/D