chanhvinh.com

MC74HC244A

Octal 3-State Noninverting Buffer/Line Driver/ Line Receiver

High−Performance Silicon−Gate CMOS

The MC74HC244A is identical in pinout to the LS244. The device inputs are compatible with standard CMOS outputs; with pullup resistors, they are compatible with LSTTL outputs.

This octal noninverting buffer/line driver/line receiver is designed to be used with 3−state memory address drivers, clock drivers, and other bus−oriented systems. The device has noninverting outputs and two active−low output enables.

The HC244A is similar in function to the HC240A.

Features

- Output Drive Capability: 15 LSTTL Loads
- Outputs Directly Interface to CMOS, NMOS, and TTL
- Operating Voltage Range: 2.0 to 6.0 V
- Low Input Current: 1 μA
- High Noise Immunity Characteristic of CMOS Devices
- In Compliance with the Requirements Defined by JEDEC Standard No. 7 A
- Chip Complexity: 136 FETs or 34 Equivalent Gates
- NLV Prefix for Automotive and Other Applications Requiring Unique Site and Control Change Requirements; AEC−Q100 Qualified and PPAP Capable
- These Devices are Pb−Free, Halogen Free/BFR Free and are RoHS Compliant

LOGIC DIAGRAM

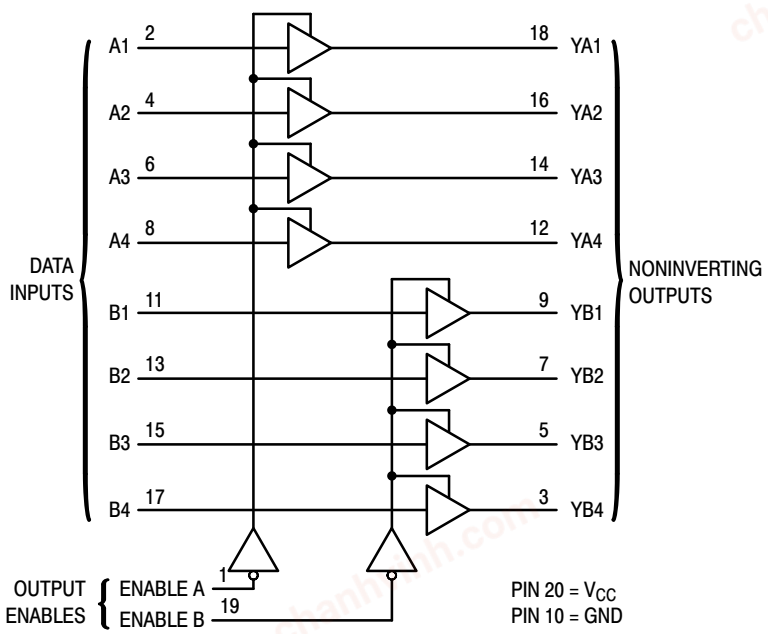

ON Semiconductor®

http://onsemi.com

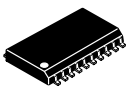

SOIC−20
DW SUFFIX
CASE 751D



TSSOP−20
DT SUFFIX
CASE 948E

PIN ASSIGNMENT

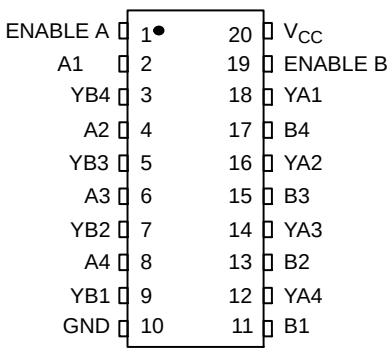

MARKING DIAGRAMS

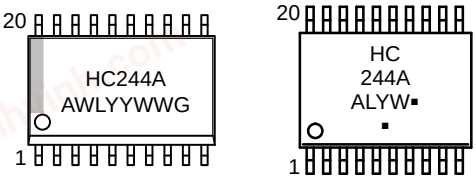

SOIC−20 **TSSOP−20**

A	=	Assembly Location
WL, L	=	Wafer Lot
YY, Y	=	Year
WW, W	=	Work Week
G or ▪	=	Pb−Free Package

(*Note: Microdot may be in either location)

FUNCTION TABLE

Inputs		Outputs
Enable A, Enable B	A, B	YA, YB
L	L	L
L	H	H
H	X	Z

Z = high impedance

ORDERING INFORMATION

See detailed ordering and shipping information in the package dimensions section on page 5 of this data sheet.

© Semiconductor Components Industries, LLC, 2014

chanhvinh.com

MAXIMUM RATINGS

Symbol	Parameter	Value	Unit
V_{CC}	DC Supply Voltage (Referenced to GND)	–0.5 to +7.0	V
V_{in}	DC Input Voltage (Referenced to GND)	–0.5 to V_{CC} + 0.5	V
V_{out}	DC Output Voltage (Referenced to GND)	–0.5 to V_{CC} + 0.5	V
I_{in}	DC Input Current, per Pin	±20	mA
I_{out}	DC Output Current, per Pin	±35	mA
I_{CC}	DC Supply Current, V_{CC} and GND Pins	±75	mA
I_{IK}	Input Clamp Current (V_I < 0 or V_I > V_{CC})	±20	mA
I_{OK}	Output Clamp Current (V_O < 0 or V_O > V_{CC})	±20	mA
P_D	Power Dissipation in Still Air, SOIC Package† TSSOP Package†	500 450	mW
T_{stg}	Storage Temperature	–65 to +150	°C
T_L	Lead Temperature, 1 mm from Case for 10 Seconds (SOIC, SSOP or TSSOP Package)	260	°C

Stresses exceeding those listed in the Maximum Ratings table may damage the device. If any of these limits are exceeded, device functionality should not be assumed, damage may occur and reliability may be affected.

†Derating: SOIC Package: –7 mW/°C from 65° to 125°C
TSSOP Package: −6.1 mW/°C from 65° to 125°C

This device contains protection circuitry to guard against damage due to high static voltages or electric fields. However, precautions must be taken to avoid applications of any voltage higher than maximum rated voltages to this high−impedance circuit. For proper operation, V_{in} and V_{out} should be constrained to the range GND ≤ (V_{in} or V_{out}) ≤ V_{CC}.

Unused inputs must always be tied to an appropriate logic voltage level (e.g., either GND or V_{CC}). Unused outputs must be left open.

RECOMMENDED OPERATING CONDITIONS

Symbol	Parameter		Min	Max	Unit
V_{CC}	DC Supply Voltage (Referenced to GND)		2.0	6.0	V
V_{in}, V_{out}	DC Input Voltage, Output Voltage (Referenced to GND)		0	V_{CC}	V
T_A	Operating Temperature, All Package Types		–55	+125	°C
t_r, t_f	Input Rise and Fall Time (Figure 1)	V_{CC} = 2.0 V V_{CC} = 4.5 V V_{CC} = 6.0 V	0 0 0	1000 500 400	ns

Functional operation above the stresses listed in the Recommended Operating Ranges is not implied. Extended exposure to stresses beyond the Recommended Operating Ranges limits may affect device reliability.

chanhvinh.com

DC ELECTRICAL CHARACTERISTICS (Voltages Referenced to GND)

Symbol	Parameter	Test Conditions	V_{CC} V	Guaranteed Limit			Unit
				−55 to 25°C	≤ 85°C	≤ 125°C	
V_{IH}	Minimum High−Level Input Voltage	V_{out} = V_{CC} − 0.1 V $\|I_{out}\|$ ≤ 20 μA	2.0 3.0 4.5 6.0	1.5 2.1 3.15 4.2	1.5 2.1 3.15 4.2	1.5 2.1 3.15 4.2	V
V_{IL}	Maximum Low−Level Input Voltage	V_{out} = 0.1 V $\|I_{out}\|$ ≤ 20 μA	2.0 3.0 4.5 6.0	0.5 0.9 1.35 1.8	0.5 0.9 1.35 1.8	0.5 0.9 1.35 1.8	V
V_{OH}	Minimum High−Level Output Voltage	V_{in} = V_{IH} $\|I_{out}\|$ ≤ 20 μA	2.0 4.5 6.0	1.9 4.4 5.9	1.9 4.4 5.9	1.9 4.4 5.9	V
		V_{in} = V_{IH} $\|I_{out}\|$ ≤ 2.4 mA $\|I_{out}\|$ ≤ 6.0 mA $\|I_{out}\|$ ≤ 7.8 mA	3.0 4.5 6.0	2.48 3.98 5.48	2.34 3.84 5.34	2.2 3.7 5.2	
V_{OL}	Maximum Low−Level Output Voltage	V_{in} = V_{IL} $\|I_{out}\|$ ≤ 20 μA	2.0 4.5 6.0	0.1 0.1 0.1	0.1 0.1 0.1	0.1 0.1 0.1	V
		V_{in} = V_{IL} $\|I_{out}\|$ ≤ 2.4 mA $\|I_{out}\|$ ≤ 6.0 mA $\|I_{out}\|$ ≤ 7.8 mA	3.0 4.5 6.0	0.26 0.26 0.26	0.33 0.33 0.33	0.4 0.4 0.4	
I_{in}	Maximum Input Leakage Current	V_{in} = V_{CC} or GND	6.0	±0.1	±1.0	±1.0	μA
I_{OZ}	Maximum Three−State Leakage Current	Output in High−Impedance State V_{in} = V_{IL} or V_{IH} V_{out} = V_{CC} or GND	6.0	±0.5	±5.0	±10	μA
I_{CC}	Maximum Quiescent Supply Current (per Package)	V_{in} = V_{CC} or GND I_{out} = 0 μA	6.0	4.0	40	160	μA

AC ELECTRICAL CHARACTERISTICS (C_L = 50 pF, Input t_r = t_f = 6 ns)

Symbol	Parameter	V_{CC} V	Guaranteed Limit			Unit
			−55 to 25°C	≤85°C	≤125°C	
t_{PLH}, t_{PHL}	Maximum Propagation Delay, A to YA or B to YB (Figures 1 and 3)	2.0 3.0 4.5 6.0	96 50 18 15	115 60 23 20	135 70 27 23	ns
t_{PLZ}, t_{PHZ}	Maximum Propagation Delay, Output Enable to YA or YB (Figures 2 and 4)	2.0 3.0 4.5 6.0	110 60 22 19	140 70 28 24	165 80 33 28	ns
t_{PZL}, t_{PZH}	Maximum Propagation Delay, Output Enable to YA or YB (Figures 2 and 4)	2.0 3.0 4.5 6.0	110 60 22 19	140 70 28 24	165 80 33 28	ns
t_{TLH}, t_{THL}	Maximum Output Transition Time, Any Output (Figures 1 and 3)	2.0 3.0 4.5 6.0	60 23 12 10	75 27 15 13	90 32 18 15	ns
C_{in}	Maximum Input Capacitance	−	10	10	10	pF
C_{out}	Maximum Three−State Output Capacitance (Output in High−Impedance State)	−	15	15	15	pF

		Typical @ 25°C, V_{CC} = 5.0 V	
C_{PD}	Power Dissipation Capacitance (Per Buffer)*	34	pF

* Used to determine the no−load dynamic power consumption: $P_D = C_{PD} V_{CC}^2 f + I_{CC} V_{CC}$.

chanhvinh.com

SWITCHING WAVEFORMS

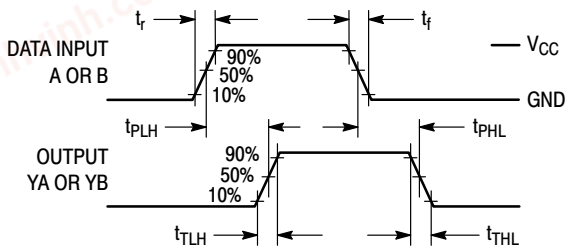

Figure 1.

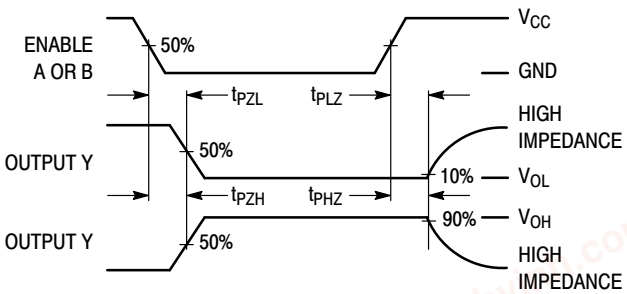

Figure 2.

TEST CIRCUITS

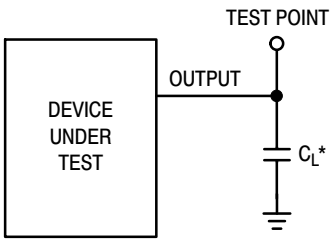

*Includes all probe and jig capacitance

Figure 3. Test Circuit

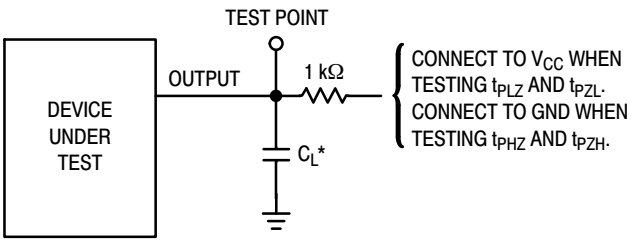

*Includes all probe and jig capacitance

Figure 4. Test Circuit

PIN DESCRIPTIONS

INPUTS

A1, A2, A3, A4, B1, B2, B3, B4
(Pins 2, 4, 6, 8, 11, 13, 15, 17)

Data input pins. Data on these pins appear in noninverted form on the corresponding Y outputs, when the outputs are enabled.

CONTROLS

Enable A, Enable B (Pins 1, 19)

Output enables (active−low). When a low level is applied to these pins, the outputs are enabled and the devices function as noninverting buffers. When a high level is applied, the outputs assume the high impedance state.

OUTPUTS

YA1, YA2, YA3, YA4, YB1, YB2, YB3, YB4
(Pins 18, 16, 14, 12, 9, 7, 5, 3)

Device outputs. Depending upon the state of the output−enable pins, these outputs are either noninverting outputs or high−impedance outputs.

chanhvinh.com

LOGIC DETAIL

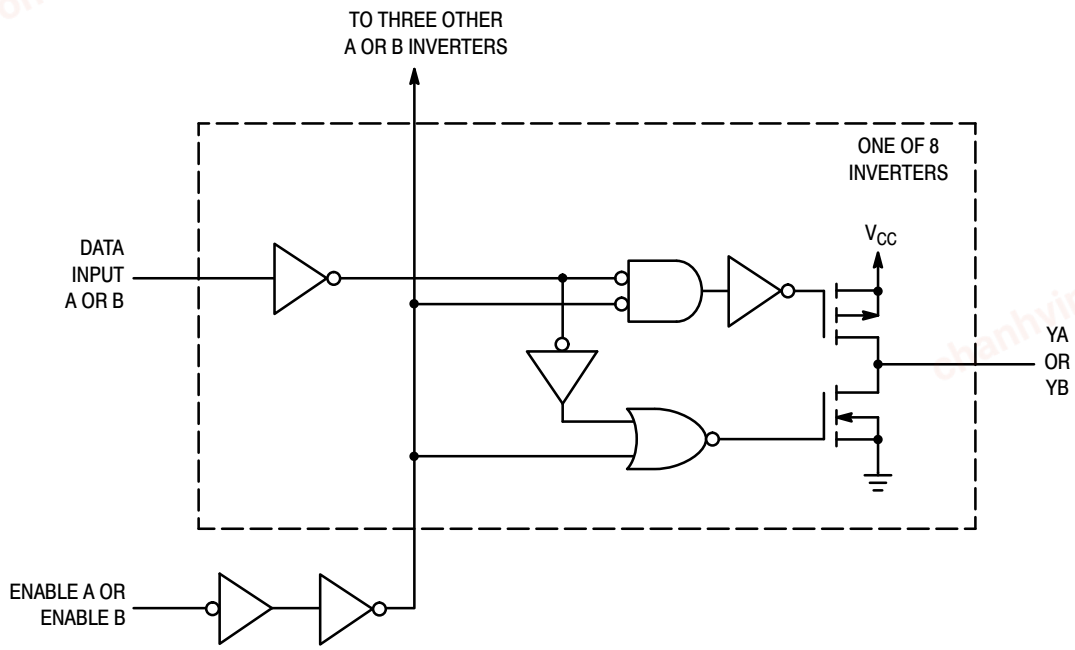

ORDERING INFORMATION

Device	Package	Shipping†
MC74HC244ADWG	SOIC−20 WIDE (Pb−Free)	38 Units / Rail
MC74HC244ADWR2G	SOIC−20 WIDE (Pb−Free)	1000 / Tape & Reel
MC74HC244ADTG	TSSOP−20 (Pb−Free)	75 Units / Rail
MC74HC244ADTR2G	TSSOP−20 (Pb−Free)	2500 / Tape & Reel
NLV74HC244ADWR2G*	SOIC−20 WIDE (Pb−Free)	1000 / Tape & Reel
NLV74HC244ADTR2G*	TSSOP−20 (Pb−Free)	2500 / Tape & Reel

†For information on tape and reel specifications, including part orientation and tape sizes, please refer to our Tape and Reel Packaging Specifications Brochure, BRD8011/D.

*NLV Prefix for Automotive and Other Applications Requiring Unique Site and Control Change Requirements; AEC−Q100 Qualified and PPAP Capable

chanhvinh.com

PACKAGE DIMENSIONS

TSSOP−20
DT SUFFIX
CASE 948E−02
ISSUE C

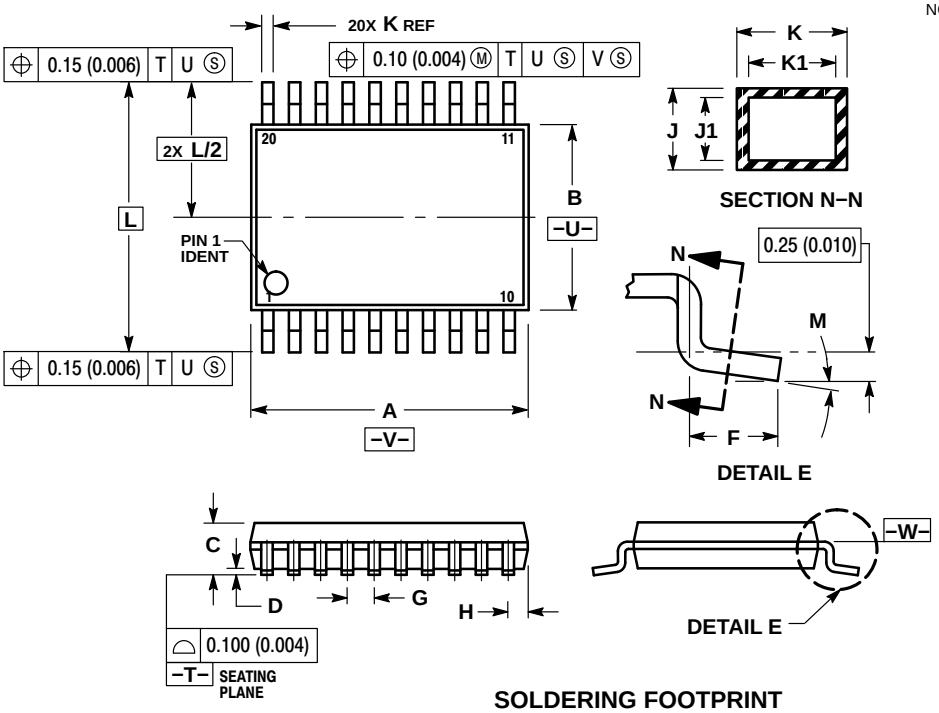

NOTES:
1. DIMENSIONING AND TOLERANCING PER ANSI Y14.5M, 1982.
2. CONTROLLING DIMENSION: MILLIMETER.
3. DIMENSION A DOES NOT INCLUDE MOLD FLASH, PROTRUSIONS OR GATE BURRS. MOLD FLASH OR GATE BURRS SHALL NOT EXCEED 0.15 (0.006) PER SIDE.
4. DIMENSION B DOES NOT INCLUDE INTERLEAD FLASH OR PROTRUSION. INTERLEAD FLASH OR PROTRUSION SHALL NOT EXCEED 0.25 (0.010) PER SIDE.
5. DIMENSION K DOES NOT INCLUDE DAMBAR PROTRUSION. ALLOWABLE DAMBAR PROTRUSION SHALL BE 0.08 (0.003) TOTAL IN EXCESS OF THE K DIMENSION AT MAXIMUM MATERIAL CONDITION.
6. TERMINAL NUMBERS ARE SHOWN FOR REFERENCE ONLY.
7. DIMENSION A AND B ARE TO BE DETERMINED AT DATUM PLANE −W−.

	MILLIMETERS		INCHES	
DIM	MIN	MAX	MIN	MAX
A	6.40	6.60	0.252	0.260
B	4.30	4.50	0.169	0.177
C	---	1.20	---	0.047
D	0.05	0.15	0.002	0.006
F	0.50	0.75	0.020	0.030
G	0.65 BSC		0.026 BSC	
H	0.27	0.37	0.011	0.015
J	0.09	0.20	0.004	0.008
J1	0.09	0.16	0.004	0.006
K	0.19	0.30	0.007	0.012
K1	0.19	0.25	0.007	0.010
L	6.40 BSC		0.252 BSC	
M	0°	8°	0°	8°

SOLDERING FOOTPRINT

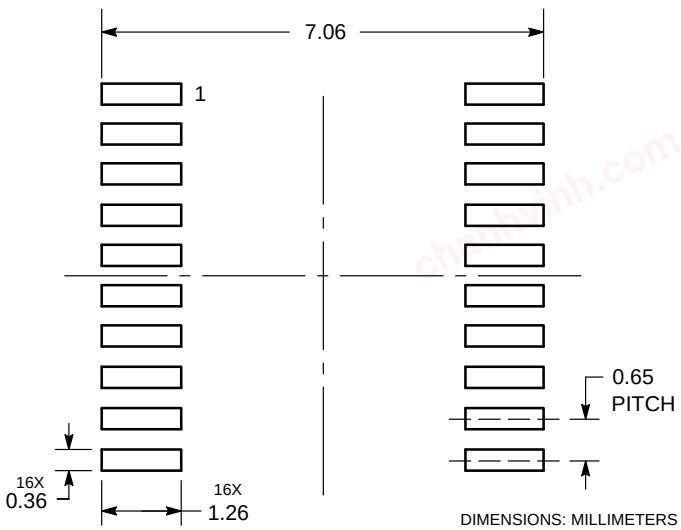

DIMENSIONS: MILLIMETERS

*For additional information on our Pb−Free strategy and soldering details, please download the ON Semiconductor Soldering and Mounting Techniques Reference Manual, SOLDERRM/D.

chanhvinh.com

MC74HC244A

PACKAGE DIMENSIONS

SOIC−20
DW SUFFIX
CASE 751D−05
ISSUE G

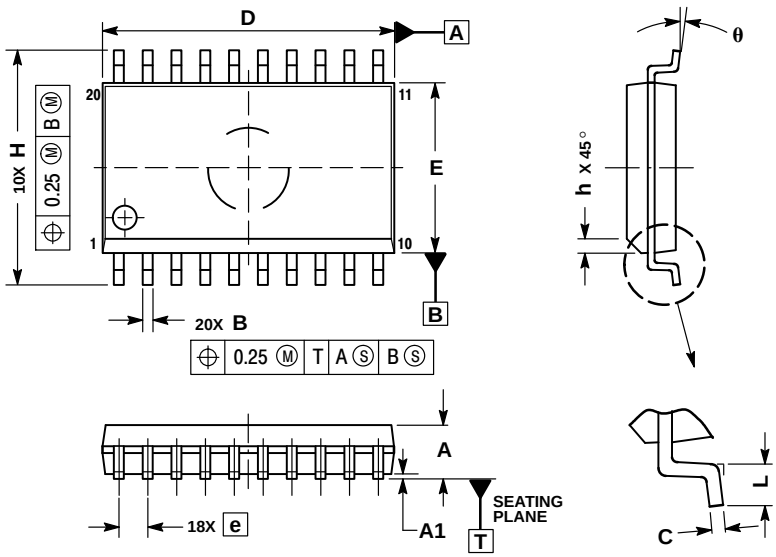

NOTES:
1. DIMENSIONS ARE IN MILLIMETERS.
2. INTERPRET DIMENSIONS AND TOLERANCES PER ASME Y14.5M, 1994.
3. DIMENSIONS D AND E DO NOT INCLUDE MOLD PROTRUSION.
4. MAXIMUM MOLD PROTRUSION 0.15 PER SIDE.
5. DIMENSION B DOES NOT INCLUDE DAMBAR PROTRUSION. ALLOWABLE PROTRUSION SHALL BE 0.13 TOTAL IN EXCESS OF B DIMENSION AT MAXIMUM MATERIAL CONDITION.

	MILLIMETERS	
DIM	MIN	MAX
A	2.35	2.65
A1	0.10	0.25
B	0.35	0.49
C	0.23	0.32
D	12.65	12.95
E	7.40	7.60
e	1.27 BSC	
H	10.05	10.55
h	0.25	0.75
L	0.50	0.90
θ	0°	7°

ON Semiconductor and the ON are registered trademarks of Semiconductor Components Industries, LLC (SCILLC) or its subsidiaries in the United States and/or other countries. SCILLC owns the rights to a number of patents, trademarks, copyrights, trade secrets, and other intellectual property. A listing of SCILLC's product/patent coverage may be accessed at www.onsemi.com/site/pdf/Patent−Marking.pdf. SCILLC reserves the right to make changes without further notice to any products herein. SCILLC makes no warranty, representation or guarantee regarding the suitability of its products for any particular purpose, nor does SCILLC assume any liability arising out of the application or use of any product or circuit, and specifically disclaims any and all liability, including without limitation special, consequential or incidental damages. "Typical" parameters which may be provided in SCILLC data sheets and/or specifications can and do vary in different applications and actual performance may vary over time. All operating parameters, including "Typicals" must be validated for each customer application by customer's technical experts. SCILLC does not convey any license under its patent rights nor the rights of others. SCILLC products are not designed, intended, or authorized for use as components in systems intended for surgical implant into the body, or other applications intended to support or sustain life, or for any other application in which the failure of the SCILLC product could create a situation where personal injury or death may occur. Should Buyer purchase or use SCILLC products for any such unintended or unauthorized application, Buyer shall indemnify and hold SCILLC and its officers, employees, subsidiaries, affiliates, and distributors harmless against all claims, costs, damages, and expenses, and reasonable attorney fees arising out of, directly or indirectly, any claim of personal injury or death associated with such unintended or unauthorized use, even if such claim alleges that SCILLC was negligent regarding the design or manufacture of the part. SCILLC is an Equal Opportunity/Affirmative Action Employer. This literature is subject to all applicable copyright laws and is not for resale in any manner.

PUBLICATION ORDERING INFORMATION

LITERATURE FULFILLMENT:
Literature Distribution Center for ON Semiconductor
P.O. Box 5163, Denver, Colorado 80217 USA
Phone: 303−675−2175 or 800−344−3860 Toll Free USA/Canada
Fax: 303−675−2176 or 800−344−3867 Toll Free USA/Canada
Email: orderlit@onsemi.com

N. American Technical Support: 800−282−9855 Toll Free USA/Canada
Europe, Middle East and Africa Technical Support:
Phone: 421 33 790 2910
Japan Customer Focus Center
Phone: 81−3−5817−1050

ON Semiconductor Website: **www.onsemi.com**

Order Literature: http://www.onsemi.com/orderlit

For additional information, please contact your local Sales Representative