chanhvinh.com

MC74AC125, MC74ACT125

Quad Buffer with 3-State Outputs

High−Performance Silicon−Gate CMOS

ON Semiconductor®

www.onsemi.com

Features

- Outputs Source/Sink
- ′ACT125 Has TTL Compatible Inputs
- These are Pb−Free Devices

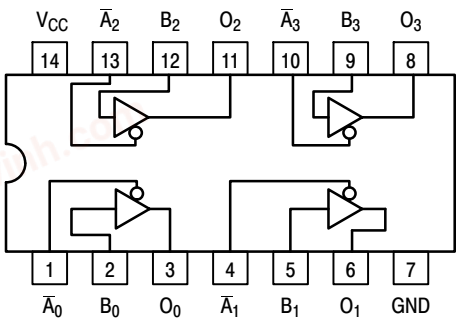

Figure 1. Pinout: 14−Lead Packages Conductors
(Top View)

PIN ASSIGNMENT

PIN	FUNCTION
$\overline{A}_n$, B_n	Inputs
O_n	Outputs

FUNCTION TABLE

Inputs		Output
$\overline{A}_n$	B_n	O_n
L	L	L
L	H	H
H	X	Z

NOTE: H = High Voltage Level;
L = Low Voltage Level;
Z = High Impedance;
X = Immaterial

MARKING DIAGRAMS

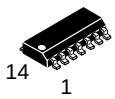

SOIC−14
D SUFFIX
CASE 751A

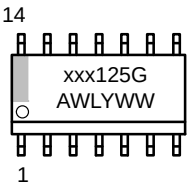

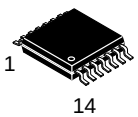

TSSOP−14
DT SUFFIX
CASE 948G

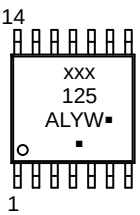

xxx = AC or ACT
A = Assembly Location
WL or L = Wafer Lot
Y = Year
WW or W = Work Week
G or ▪ = Pb−Free Package

(Note: Microdot may be in either location)

ORDERING INFORMATION

See detailed ordering and shipping information in the package dimensions section on page 5 of this data sheet.

© Semiconductor Components Industries, LLC, 2015

chanhvinh.com

MAXIMUM RATINGS

Symbol	Parameter		Value	Unit
V_{CC}	DC Supply Voltage		−0.5 to +7.0	V
V_I	DC Input Voltage		$-0.5 \le V_I \le V_{CC} + 0.5$	V
V_O	DC Output Voltage	(Note 1)	$-0.5 \le V_O \le V_{CC} + 0.5$	V
I_{IK}	DC Input Diode Current		±20	mA
I_{OK}	DC Output Diode Current		±50	mA
I_O	DC Output Sink/Source Current		±50	mA
I_{CC}	DC Supply Current per Output Pin		±50	mA
I_{GND}	DC Ground Current per Output Pin		±50	mA
T_{STG}	Storage Temperature Range		−65 to +150	°C
T_L	Lead temperature, 1 mm from Case for 10 Seconds		260	°C
T_J	Junction temperature under Bias		+150	°C
θ_{JA}	Thermal Resistance (Note 2)	SOIC TSSOP	125 170	°C/W
P_D	Power Dissipation in Still Air at 85°C	SOIC TSSOP	125 170	mW
MSL	Moisture Sensitivity		Level 1	
F_R	Flammability Rating	Oxygen Index: 30% − 35%	UL 94 V−0 @ 0.125 in	
V_{ESD}	ESD Withstand Voltage	Human Body Model (Note 3) Machine Model (Note 4) Charged Device Model (Note 5)	> 2000 > 200 > 1000	V
$I_{Latch-Up}$	Latch−Up Performance	Above V_{CC} and Below GND at 85°C (Note 6)	±100	mA

Stresses exceeding those listed in the Maximum Ratings table may damage the device. If any of these limits are exceeded, device functionality should not be assumed, damage may occur and reliability may be affected.

1. I_O absolute maximum rating must be observed.
2. The package thermal impedance is calculated in accordance with JESD51−7.
3. Tested to EIA/JESD22−A114−A.
4. Tested to EIA/JESD22−A115−A.
5. Tested to JESD22−C101−A.
6. Tested to EIA/JESD78.

RECOMMENDED OPERATING CONDITIONS

Symbol	Parameter		Min	Typ	Max	Unit
V_{CC}	Supply Voltage	′AC	2.0	5.0	6.0	V
		′ACT	4.5	5.0	5.5	
V_{in}, V_{out}	DC Input Voltage, Output Voltage (Ref. to GND)		0	−	V_{CC}	V
t_r, t_f	Input Rise and Fall Time (Note 1) ′AC Devices except Schmitt Inputs	V_{CC} @ 3.0 V	−	150	−	ns/V
		V_{CC} @ 4.5 V	−	40	−	
		V_{CC} @ 5.5 V	−	25	−	
T_J	Junction Temperature (PDIP)		−	−	140	°C
T_A	Operating Ambient Temperature Range		−40	25	85	°C
I_{OH}	Output Current − HIGH		−	−	−24	mA
I_{OL}	Output Current − LOW		−	−	24	mA

Functional operation above the stresses listed in the Recommended Operating Ranges is not implied. Extended exposure to stresses beyond the Recommended Operating Ranges limits may affect device reliability.

1. V_{in} from 30% to 70% V_{CC}; see individual Data Sheets for devices that differ from the typical input rise and fall times.
2. V_{in} from 0.8 V to 2.0 V; see individual Data Sheets for devices that differ from the typical input rise and fall times.

chanhvinh.com

DC CHARACTERISTICS

Symbol	Parameter	V_{CC} (V)	74AC T_A = +25°C		74AC T_A = −40°C to +85°C	Unit	Conditions
			Typ	Guaranteed Limits			
V_{IH}	Minimum High Level Input Voltage	3.0 4.5 5.5	1.5 2.25 2.75	2.1 3.15 3.85	2.1 3.15 3.85	V	V_{OUT} = 0.1 V or V_{CC} − 0.1 V
V_{IL}	Maximum Low Level Input Voltage	3.0 4.5 5.5	1.5 2.25 2.75	0.9 1.35 1.65	0.9 1.35 1.65	V	V_{OUT} = 0.1 V or V_{CC} − 0.1 V
V_{OH}	Minimum High Level Output Voltage	3.0 4.5 5.5	2.99 4.46 5.49	2.9 4.4 5.4	2.9 4.4 5.4	V	I_{OUT} = − 50 μA
		3.0 4.5 5.5	− − −	2.56 3.86 4.86	2.46 3.76 4.76	V	*V_{IN} = V_{IL} or V_{IH} −12 mA I_{OH} − 24 mA − 24 mA
V_{OL}	Minimum Low Level Output Voltage	3.0 4.5 5.5	0.002 0.001 0.001	0.1 0.1 0.1	0.1 0.1 0.1	V	I_{OUT} = 50 μA
		3.0 4.5 5.5	− − −	0.36 0.36 0.36	0.44 0.44 0.44	V	*V_{IN} = V_{IL} or V_{IH} 12 mA I_{OL} 24 mA 24 mA
I_{IN}	Maximum Input Leakage Current	5.5	−	±0.1	±1.0	μA	V_I = V_{CC}, GND
I_{OZ}	V_I (OE) = V_{IL}, V_{IH} V_I = V_{CC}, GND V_O = V_{CC} , GND	5.5	−	±0.5	±5.0	μA	V_I (OE) = V_{IL}, V_{IH} V_I = V_{CC}, GND V_O = V_{CC}, GND
I_{OLD}	†Minimum Dynamic Output Current	5.5	−	−	75	mA	V_{OLD} = 1.65 V Max
I_{OHD}		5.5	−	−	−75	mA	V_{OHD} = 3.85 V Min
I_{CC}	Maximum Quiescent Supply Current	5.5	−	8.0	80	μA	V_{IN} = V_{CC} or GND

*All outputs loaded; thresholds on input associated with output under test.
†Maximum test duration 2.0 ms, one input loaded at a time.

NOTE: I_{IN} and I_{CC} @ 3.0 V are guaranteed to be less than or equal to the respective limit @ 5.5 V.

AC CHARACTERISTICS

Symbol	Parameter	V_{CC}* (V)	74AC T_A = +25°C C_L = 50 pF		74AC T_A = −40°C to +85°C C_L = 50 pF		Unit
			Min	Max	Min	Max	
t_{PLH}	Propagation Delay Data to Output	3.3 5.0	1.0 1.0	9.0 7.0	1.0 1.0	10 7.5	ns
t_{PHL}	Propagation Delay Data to Output	3.3 5.0	1.0 1.0	9.0 7.0	1.0 1.0	10 7.5	ns
t_{PZH}	Output Enable Time	3.3 5.0	1.0 1.0	10.5 7.0	1.0 1.0	11 8.0	ns
t_{PZL}	Output Enable Time	3.3 5.0	1.0 1.0	10 8.0	1.0 1.0	11 8.5	ns
t_{PHZ}	Output Disable Time	3.3 5.0	1.0 1.0	10 9.0	1.0 1.0	10.5 9.5	ns
t_{PLZ}	Output Disable Time	3.3 5.0	1.0 1.0	10.5 9.0	1.0 1.0	11.5 9.5	ns

*Voltage Range 3.3 V is 3.3 V ±0.3 V.
Voltage Range 5.0 V is 5.0 V ±0.5 V.

chanhvinh.com

DC CHARACTERISTICS

Symbol	Parameter	V_{CC} (V)	74ACT T_A = +25°C		74ACT T_A = −40°C to +85°C	Unit	Conditions
			Typ	Guaranteed Limits			
V_{IH}	Minimum High Level Input Voltage	4.5 5.5	1.5 1.5	2.2 2.0	2.0 2.0	V	V_{OUT} = 0.1 V or V_{CC} − 0.1 V
V_{IL}	Maximum Low Level Input Voltage	4.5 5.5	1.5 1.5	0.8 0.8	0.8 0.8	V	V_{OUT} = 0.1 V or V_{CC} − 0.1 V
V_{OH}	Minimum High Level Output Voltage	4.5 5.5	4.49 5.49	4.4 5.4	4.4 5.4	V	I_{OUT} = − 50 μA
		4.5 5.5	− −	3.86 4.86	3.76 4.76	V	*V_{IN} = V_{IL} or V_{IH} I_{OH} − 24 mA I_{OH} − 24 mA
V_{OL}	Minimum Low Level Output Voltage	4.5 5.5	0.001 0.001	0.1 0.1	0.1 0.1	V	I_{OUT} = − 50 μA
		4.5 5.5	− −	0.36 0.36	0.44 0.44	V	*V_{IN} = V_{IL} or V_{IH} I_{OH} − 24 mA − 24 mA
I_{IN}	Maximum Input Leakage Current	5.5	−	±0.1	±1.0	μA	V_I = V_{CC}, GND
I_{OZ}	V_I (OE) = V_{IL}, V_{IH} V_I = V_{CC}, GND V_O = V_{CC} , GND	5.5	−	±0.5	±5.0	μA	V_I (OE) = V_{IL}, V_{IH} V_I = V_{CC}, GND V_O = V_{CC}, GND
ΔI_{CCT}	Additional Max. I_{CC}/Input	5.5	0.6	−	1.5	mA	V_I = V_{CC} − 2.1 V
I_{OLD}	†Minimum Dynamic Output Current	5.5	−	−	75	mA	V_{OLD} = 1.65 V Max
I_{OHD}		5.5	−	−	−75	mA	V_{OHD} = 3.85 V Min
I_{CC}	Maximum Quiescent Supply Current	5.5	−	8.0	80	μA	V_{IN} = V_{CC} or GND

*All outputs loaded; thresholds on input associated with output under test.
†Maximum test duration 2.0 ms, one input loaded at a time.

AC CHARACTERISTICS

Symbol	Parameter	V_{CC}* (V)	74ACT T_A = +25°C C_L = 50 pF		74ACT T_A = −40°C to +85°C C_L = 50 pF		Unit
			Min	Max	Min	Max	
t_{PLH}	Propagation Delay Data to Output	5.0	1.0	9.0	1.0	10	ns
t_{PHL}	Propagation Delay Data to Output	5.0	1.0	9.0	1.0	10	ns
t_{PZH}	Output Enable Time	5.0	1.0	8.5	1.0	9.5	ns
t_{PZL}	Output Enable Time	5.0	1.0	9.5	1.0	10.5	ns
t_{PHZ}	Output Disable Time	5.0	1.0	9.5	1.0	10.5	ns
t_{PLZ}	Output Disable Time	5.0	1.0	10	1.0	10.5	ns

*Voltage Range 5.0 V is 5.0 V ±0.5 V.

CAPACITANCE

Symbol	Parameter	Value Typ	Unit	Test Conditions
C_{IN}	Input Capacitance	4.5	pF	V_{CC} = 5.0 V
C_{PD}	Power Dissipation Capacitance	45	pF	V_{CC} = 5.0 V

chanhvinh.com

ORDERING INFORMATION

Device	Package	Shipping†
MC74AC125DG	SOIC−14 (Pb−Free)	55 Units / Rail
MC74AC125DR2G		2500 / Tape & Reel
MC74AC125DTR2G	TSSOP−14 (Pb−Free)	2500 / Tape & Reel
MC74ACT125DR2G	SOIC−14 (Pb−Free)	2500 / Tape & Reel
MC74ACT125DTR2G	TSSOP−14 (Pb−Free)	2500 / Tape & Reel

†For information on tape and reel specifications, including part orientation and tape sizes, please refer to our Tape and Reel Packaging Specifications Brochure, BRD8011/D.

chanhvinh.com

PACKAGE DIMENSIONS

SOIC−14 NB
CASE 751A−03
ISSUE K

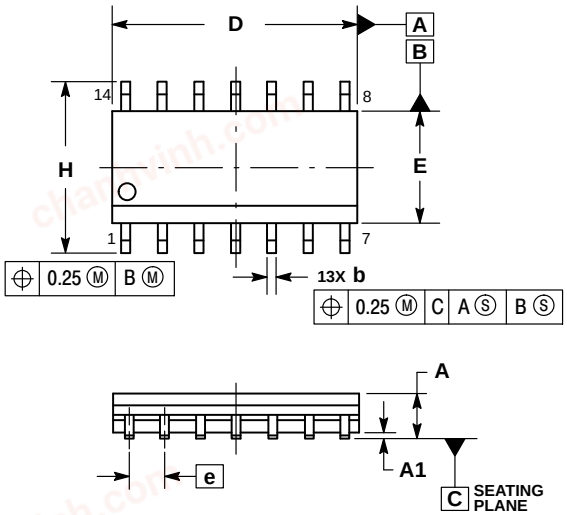

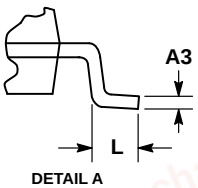

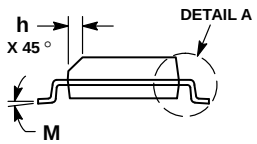

NOTES:
1. DIMENSIONING AND TOLERANCING PER ASME Y14.5M, 1994.
2. CONTROLLING DIMENSION: MILLIMETERS.
3. DIMENSION b DOES NOT INCLUDE DAMBAR PROTRUSION. ALLOWABLE PROTRUSION SHALL BE 0.13 TOTAL IN EXCESS OF AT MAXIMUM MATERIAL CONDITION.
4. DIMENSIONS D AND E DO NOT INCLUDE MOLD PROTRUSIONS.
5. MAXIMUM MOLD PROTRUSION 0.15 PER SIDE.

	MILLIMETERS		INCHES	
DIM	MIN	MAX	MIN	MAX
A	1.35	1.75	0.054	0.068
A1	0.10	0.25	0.004	0.010
A3	0.19	0.25	0.008	0.010
b	0.35	0.49	0.014	0.019
D	8.55	8.75	0.337	0.344
E	3.80	4.00	0.150	0.157
e	1.27 BSC		0.050 BSC	
H	5.80	6.20	0.228	0.244
h	0.25	0.50	0.010	0.019
L	0.40	1.25	0.016	0.049
M	0 °	7 °	0 °	7 °

SOLDERING FOOTPRINT*

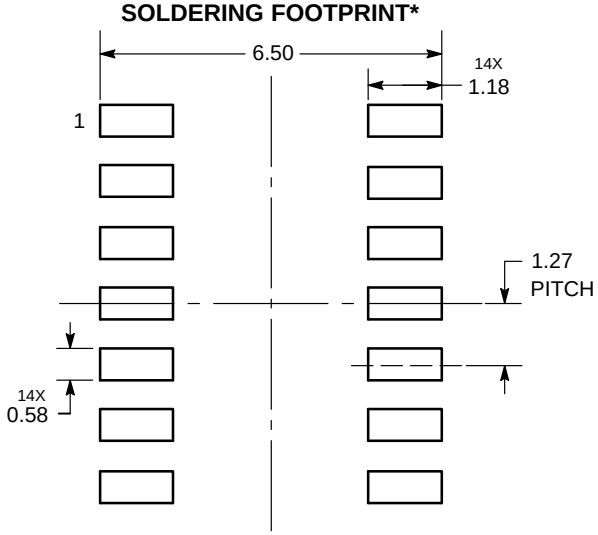

DIMENSIONS: MILLIMETERS

*For additional information on our Pb−Free strategy and soldering details, please download the ON Semiconductor Soldering and Mounting Techniques Reference Manual, SOLDERRM/D.

chanhvinh.com

PACKAGE DIMENSIONS

TSSOP−14
CASE 948G
ISSUE B

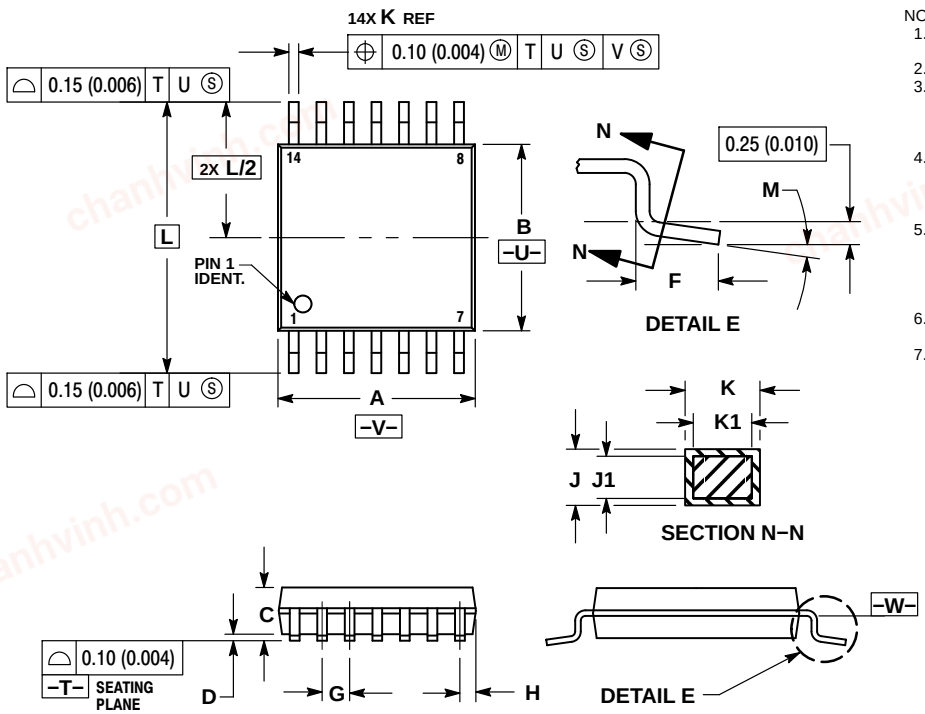

NOTES:
1. DIMENSIONING AND TOLERANCING PER ANSI Y14.5M, 1982.
2. CONTROLLING DIMENSION: MILLIMETER.
3. DIMENSION A DOES NOT INCLUDE MOLD FLASH, PROTRUSIONS OR GATE BURRS. MOLD FLASH OR GATE BURRS SHALL NOT EXCEED 0.15 (0.006) PER SIDE.
4. DIMENSION B DOES NOT INCLUDE INTERLEAD FLASH OR PROTRUSION. INTERLEAD FLASH OR PROTRUSION SHALL NOT EXCEED 0.25 (0.010) PER SIDE.
5. DIMENSION K DOES NOT INCLUDE DAMBAR PROTRUSION. ALLOWABLE DAMBAR PROTRUSION SHALL BE 0.08 (0.003) TOTAL IN EXCESS OF THE K DIMENSION AT MAXIMUM MATERIAL CONDITION.
6. TERMINAL NUMBERS ARE SHOWN FOR REFERENCE ONLY.
7. DIMENSION A AND B ARE TO BE DETERMINED AT DATUM PLANE −W−.

	MILLIMETERS		INCHES	
DIM	MIN	MAX	MIN	MAX
A	4.90	5.10	0.193	0.200
B	4.30	4.50	0.169	0.177
C	−−−	1.20	−−−	0.047
D	0.05	0.15	0.002	0.006
F	0.50	0.75	0.020	0.030
G	0.65 BSC		0.026 BSC	
H	0.50	0.60	0.020	0.024
J	0.09	0.20	0.004	0.008
J1	0.09	0.16	0.004	0.006
K	0.19	0.30	0.007	0.012
K1	0.19	0.25	0.007	0.010
L	6.40 BSC		0.252 BSC	
M	0 °	8 °	0 °	8 °

SOLDERING FOOTPRINT*

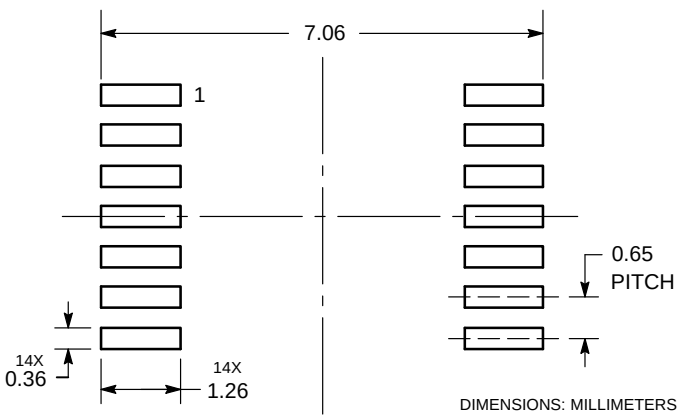

DIMENSIONS: MILLIMETERS

*For additional information on our Pb−Free strategy and soldering details, please download the ON Semiconductor Soldering and Mounting Techniques Reference Manual, SOLDERRM/D.

chanhvinh.com

MC74AC125, MC74ACT125

ON Semiconductor and the ON are registered trademarks of Semiconductor Components Industries, LLC (SCILLC) or its subsidiaries in the United States and/or other countries. SCILLC owns the rights to a number of patents, trademarks, copyrights, trade secrets, and other intellectual property. A listing of SCILLC's product/patent coverage may be accessed at www.onsemi.com/site/pdf/Patent−Marking.pdf. SCILLC reserves the right to make changes without further notice to any products herein. SCILLC makes no warranty, representation or guarantee regarding the suitability of its products for any particular purpose, nor does SCILLC assume any liability arising out of the application or use of any product or circuit, and specifically disclaims any and all liability, including without limitation special, consequential or incidental damages. "Typical" parameters which may be provided in SCILLC data sheets and/or specifications can and do vary in different applications and actual performance may vary over time. All operating parameters, including "Typicals" must be validated for each customer application by customer's technical experts. SCILLC does not convey any license under its patent rights nor the rights of others. SCILLC products are not designed, intended, or authorized for use as components in systems intended for surgical implant into the body, or other applications intended to support or sustain life, or for any other application in which the failure of the SCILLC product could create a situation where personal injury or death may occur. Should Buyer purchase or use SCILLC products for any such unintended or unauthorized application, Buyer shall indemnify and hold SCILLC and its officers, employees, subsidiaries, affiliates, and distributors harmless against all claims, costs, damages, and expenses, and reasonable attorney fees arising out of, directly or indirectly, any claim of personal injury or death associated with such unintended or unauthorized use, even if such claim alleges that SCILLC was negligent regarding the design or manufacture of the part. SCILLC is an Equal Opportunity/Affirmative Action Employer. This literature is subject to all applicable copyright laws and is not for resale in any manner.

PUBLICATION ORDERING INFORMATION

LITERATURE FULFILLMENT:
Literature Distribution Center for ON Semiconductor
P.O. Box 5163, Denver, Colorado 80217 USA
Phone: 303−675−2175 or 800−344−3860 Toll Free USA/Canada
Fax: 303−675−2176 or 800−344−3867 Toll Free USA/Canada
Email: orderlit@onsemi.com

N. American Technical Support: 800−282−9855 Toll Free USA/Canada
Europe, Middle East and Africa Technical Support:
Phone: 421 33 790 2910
Japan Customer Focus Center
Phone: 81−3−5817−1050

ON Semiconductor Website: **www.onsemi.com**

Order Literature: http://www.onsemi.com/orderlit

For additional information, please contact your local Sales Representative

MC74AC125/D