chanhvinh.com

October 2014

MBR0540
Schottky Rectifier

Features

- 0.5 A, Low Forward Voltage less than 460 mV
- 400 mW Power Dissipation Package
- Compact Surface Mount Package with The Same Footprint as Mini-melf

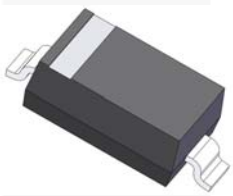

SOD-123
* Band marking denotes cathode

Ordering Information

Part Number	Top Mark	Package	Packing Method
MBR0540	B4	SOD-123 2L	Tape and Reel

Absolute Maximum Ratings

Stresses exceeding the absolute maximum ratings may damage the device. The device may not function or be operable above the recommended operating conditions and stressing the parts to these levels is not recommended. In addition, extended exposure to stresses above the recommended operating conditions may affect device reliability. The absolute maximum ratings are stress ratings only. Values are at T_A = 25°C unless otherwise noted.

Symbol	Parameter	Value	Unit
V_{RRM}	Maximum Repetitive Reverse Voltage	40	V
$I_{F(AV)}$	Average Rectified Forward Current	500	mA
I_{FSM}	Non Repetitive Peak Forward Current (Surge Applied at Rated Load Conditions Half-Wave, Single-Phase, 60 Hz)	5.5	A
T_{STG}	Storage Temperature Range	-65 to +150	°C
T_{Jmax}	Operating Junction Temperature	-65 to +125	°C

© 2001 Fairchild Semiconductor Corporation

chanhvinh.com

Thermal Characteristics

Values are at T_A = 25°C unless otherwise noted.

Symbol	Parameter	Value	Unit
$R_{\theta JA}$	Thermal Resistance, Junction-to-Ambient(1)	206	°C/W
$R_{\theta JL}$	Thermal Resistance, Junction-to-Lead(2)	118	°C/W

Notes:

1. 1.0 inch pad size (1.0 x 0.5 inch for each lead) on FR4 board.
2. Device is mounted on FR-4 PCB 0.013 mm.

Electrical Characteristics

Values are at T_A = 25°C unless otherwise noted.

Symbol	Parameter	Conditions	Min.	Max.	Unit
V_F	Forward Voltage	I_F = 500 mA		510	mV
		I_F = 500 mA, T_A = 100°C		460	
		I_F = 1.0 A		620	
		I_F = 1.0 A, T_A = 100°C		610	
I_R	Reverse Current	V_R = 20 V		10	µA
		V_R = 20 V, T_A = 100°C		5.0	mA
		V_R = 40 V		20	µA
		V_R = 40 V, T_A = 100°C		13	mA

© 2001 Fairchild Semiconductor Corporation

chanhvinh.com

Typical Performance Characteristics

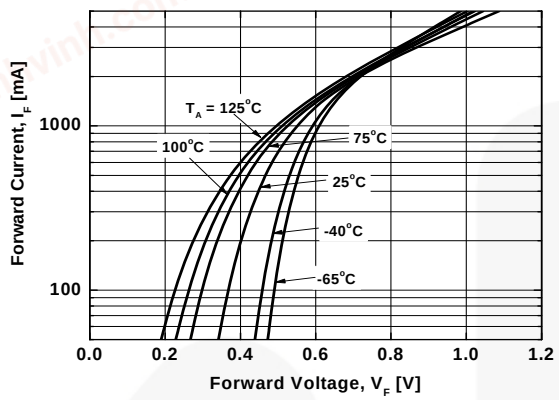

Figure 1. Forward Current vs. Forward Voltage

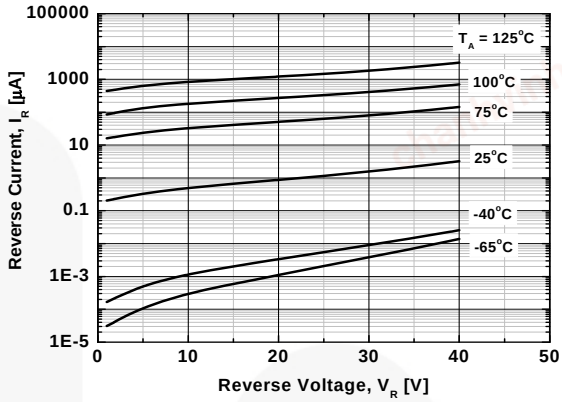

Figure 2. Reverse Current vs. Reverse Voltage

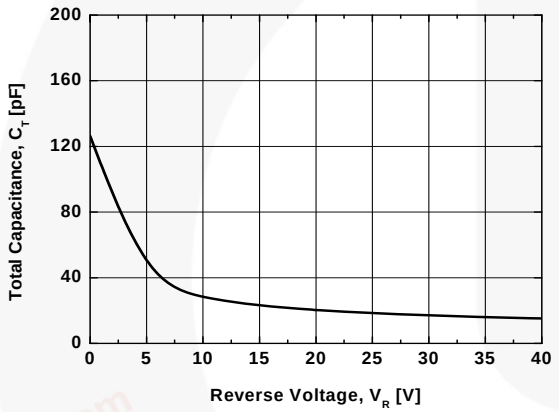

Figure 3. Total Capacitance

© 2001 Fairchild Semiconductor Corporation

chanhvinh.com

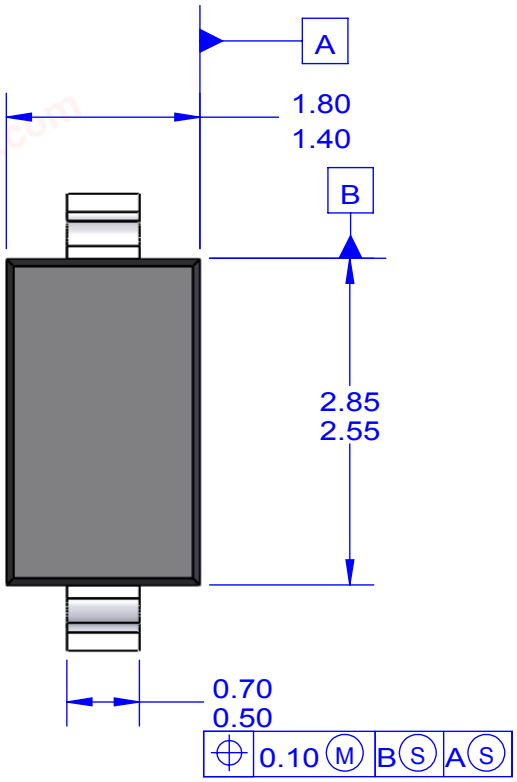

TOP VIEW

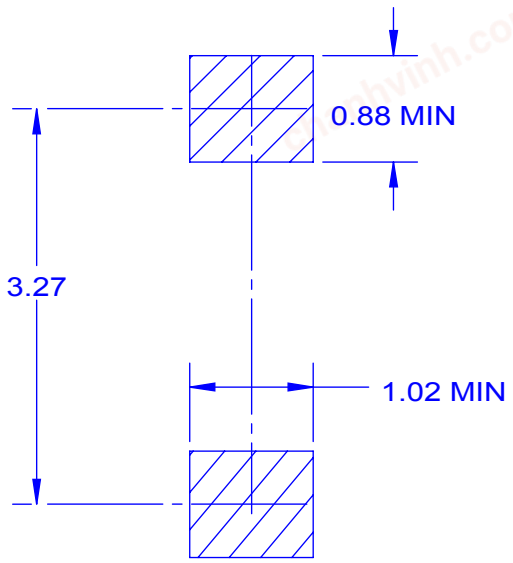

LAND PATTERN
RECOMMENDATION

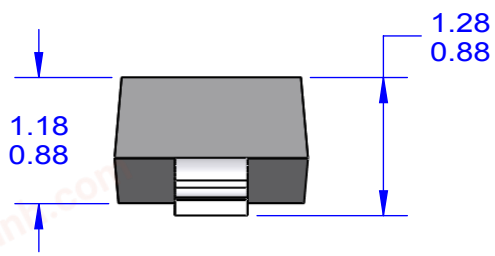

FRONT VIEW

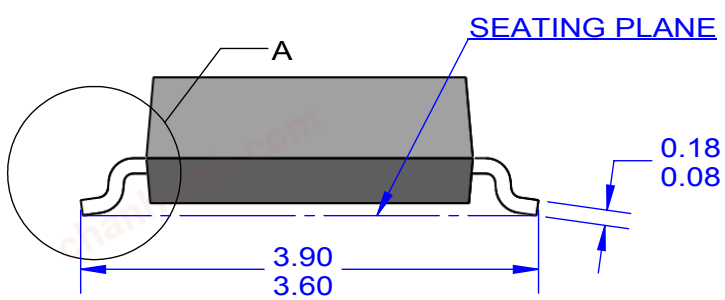

SIDE VIEW

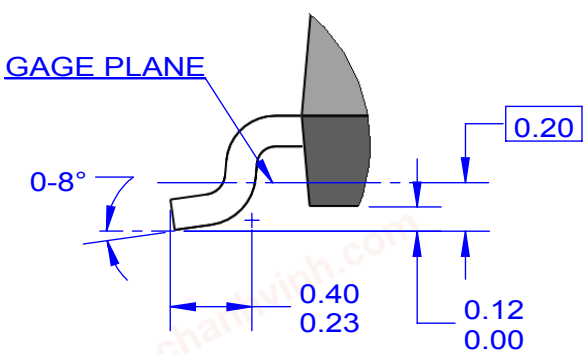

DETAIL "A"
SCALE 2:1

NOTES: UNLESS OTHERWISE SPECIFIED
A) PACKAGE REFERENCE: JEDEC, DO-215 ISSUE D, VARIATION AD.
B) ALL DIMENSIONS ARE IN MILLIMETERS.
C) DIMENSIONING AND TOLERANCING PER ASME Y14.5M-1994.
E) DRAWING FILE NAME: MA02AREV4

chanhvinh.com

TRADEMARKS

The following includes registered and unregistered trademarks and service marks, owned by Fairchild Semiconductor and/or its global subsidiaries, and is not intended to be an exhaustive list of all such trademarks.

AccuPower™
AttitudeEngine™
Awinda®
AX-CAP®*
BitSiC™
Build it Now™
CorePLUS™
CorePOWER™
CROSSVOLT™
CTL™
Current Transfer Logic™
DEUXPEED®
Dual Cool™
EcoSPARK®
EfficientMax™
ESBC™
Fairchild®
Fairchild Semiconductor®
FACT Quiet Series™
FACT®
FAST®
FastvCore™
FETBench™
FPS™
F-PFS™
FRFET®
Global Power Resource SM
GreenBridge™
Green FPS™
Green FPS™ e-Series™
G*max*™
GTO™
IntelliMAX™
ISOPLANAR™
Making Small Speakers Sound Louder and Better™
MegaBuck™
MICROCOUPLER™
MicroFET™
MicroPak™
MicroPak2™
MillerDrive™
MotionMax™
MotionGrid®
MTi®
MTx®
MVN®
mWSaver®
OptoHiT™
OPTOLOGIC®
OPTOPLANAR®
Power Supply WebDesigner™
PowerTrench®
PowerXS™
Programmable Active Droop™
QFET®
QS™
Quiet Series™
RapidConfigure™
Saving our world, 1mW/W/kW at a time™
SignalWise™
SmartMax™
SMART START™
Solutions for Your Success™
SPM®
STEALTH™
SuperFET®
SuperSOT™-3
SuperSOT™-6
SuperSOT™-8
SupreMOS®
SyncFET™
Sync-Lock™
SYSTEM GENERAL®*
TinyBoost®
TinyBuck®
TinyCalc™
TinyLogic®
TINYOPTO™
TinyPower™
TinyPWM™
TinyWire™
TranSiC™
TriFault Detect™
TRUECURRENT®*
µSerDes™
UHC®
Ultra FRFET™
UniFET™
VCX™
VisualMax™
VoltagePlus™
XS™
Xsens™
仙童™

* Trademarks of System General Corporation, used under license by Fairchild Semiconductor.

DISCLAIMER

FAIRCHILD SEMICONDUCTOR RESERVES THE RIGHT TO MAKE CHANGES WITHOUT FURTHER NOTICE TO ANY PRODUCTS HEREIN TO IMPROVE RELIABILITY, FUNCTION, OR DESIGN. TO OBTAIN THE LATEST, MOST UP-TO-DATE DATASHEET AND PRODUCT INFORMATION, VISIT OUR WEBSITE AT HTTP://WWW.FAIRCHILDSEMI.COM. FAIRCHILD DOES NOT ASSUME ANY LIABILITY ARISING OUT OF THE APPLICATION OR USE OF ANY PRODUCT OR CIRCUIT DESCRIBED HEREIN; NEITHER DOES IT CONVEY ANY LICENSE UNDER ITS PATENT RIGHTS, NOR THE RIGHTS OF OTHERS. THESE SPECIFICATIONS DO NOT EXPAND THE TERMS OF FAIRCHILD'S WORLDWIDE TERMS AND CONDITIONS, SPECIFICALLY THE WARRANTY THEREIN, WHICH COVERS THESE PRODUCTS.

LIFE SUPPORT POLICY

FAIRCHILD'S PRODUCTS ARE NOT AUTHORIZED FOR USE AS CRITICAL COMPONENTS IN LIFE SUPPORT DEVICES OR SYSTEMS WITHOUT THE EXPRESS WRITTEN APPROVAL OF FAIRCHILD SEMICONDUCTOR CORPORATION.

As used herein:

1. Life support devices or systems are devices or systems which, (a) are intended for surgical implant into the body or (b) support or sustain life, and (c) whose failure to perform when properly used in accordance with instructions for use provided in the labeling, can be reasonably expected to result in a significant injury of the user.
2. A critical component in any component of a life support, device, or system whose failure to perform can be reasonably expected to cause the failure of the life support device or system, or to affect its safety or effectiveness.

ANTI-COUNTERFEITING POLICY

Fairchild Semiconductor Corporation's Anti-Counterfeiting Policy. Fairchild's Anti-Counterfeiting Policy is also stated on our external website, www.fairchildsemi.com, under Sales Support.

Counterfeiting of semiconductor parts is a growing problem in the industry. All manufacturers of semiconductor products are experiencing counterfeiting of their parts. Customers who inadvertently purchase counterfeit parts experience many problems such as loss of brand reputation, substandard performance, failed applications, and increased cost of production and manufacturing delays. Fairchild is taking strong measures to protect ourselves and our customers from the proliferation of counterfeit parts. Fairchild strongly encourages customers to purchase Fairchild parts either directly from Fairchild or from Authorized Fairchild Distributors who are listed by country on our web page cited above. Products customers buy either from Fairchild directly or from Authorized Fairchild Distributors are genuine parts, have full traceability, meet Fairchild's quality standards for handling and storage and provide access to Fairchild's full range of up-to-date technical and product information. Fairchild and our Authorized Distributors will stand behind all warranties and will appropriately address any warranty issues that may arise. Fairchild will not provide any warranty coverage or other assistance for parts bought from Unauthorized Sources. Fairchild is committed to combat this global problem and encourage our customers to do their part in stopping this practice by buying direct or from authorized distributors.

PRODUCT STATUS DEFINITIONS

Definition of Terms

Datasheet Identification	Product Status	Definition
Advance Information	Formative / In Design	Datasheet contains the design specifications for product development. Specifications may change in any manner without notice.
Preliminary	First Production	Datasheet contains preliminary data; supplementary data will be published at a later date. Fairchild Semiconductor reserves the right to make changes at any time without notice to improve design.
No Identification Needed	Full Production	Datasheet contains final specifications. Fairchild Semiconductor reserves the right to make changes at any time without notice to improve the design.
Obsolete	Not In Production	Datasheet contains specifications on a product that is discontinued by Fairchild Semiconductor. The datasheet is for reference information only.

Rev. I74

© Fairchild Semiconductor Corporation