chanhvinh.com

FAIRCHILD SEMICONDUCTOR®

www.fairchildsemi.com

KA7552A/KA7553A

SMPS Controller

Features

- Built-in drive circuits for direct connection power MOSFET (I_O = ±1.5A)
- Wide operating frequency range (5kHz ~ 600kHz)
- Pulse by pulse over current limiting
- Over load protection
- On/off control by external trigger
- Internal UVLO
- Low standby current (typ. 90uA)
- Soft start circuit

Description

The KA7552A/KA7553A are switching power control IC for wide operating frequency range. The internal circuits include pulse by pulse current limiting, protection, on/off control by external trigger, low standby current, soft start, and high current totempole output for driving a POWER MOSFET. Maximum duty of the KA7552A is 70% and the KA7553A is 46%. When duty is maximum, the input threshold voltage of pin2 & pin8 are not same in KA7552A and KA7553A.

8-DIP



Internal Block Diagram

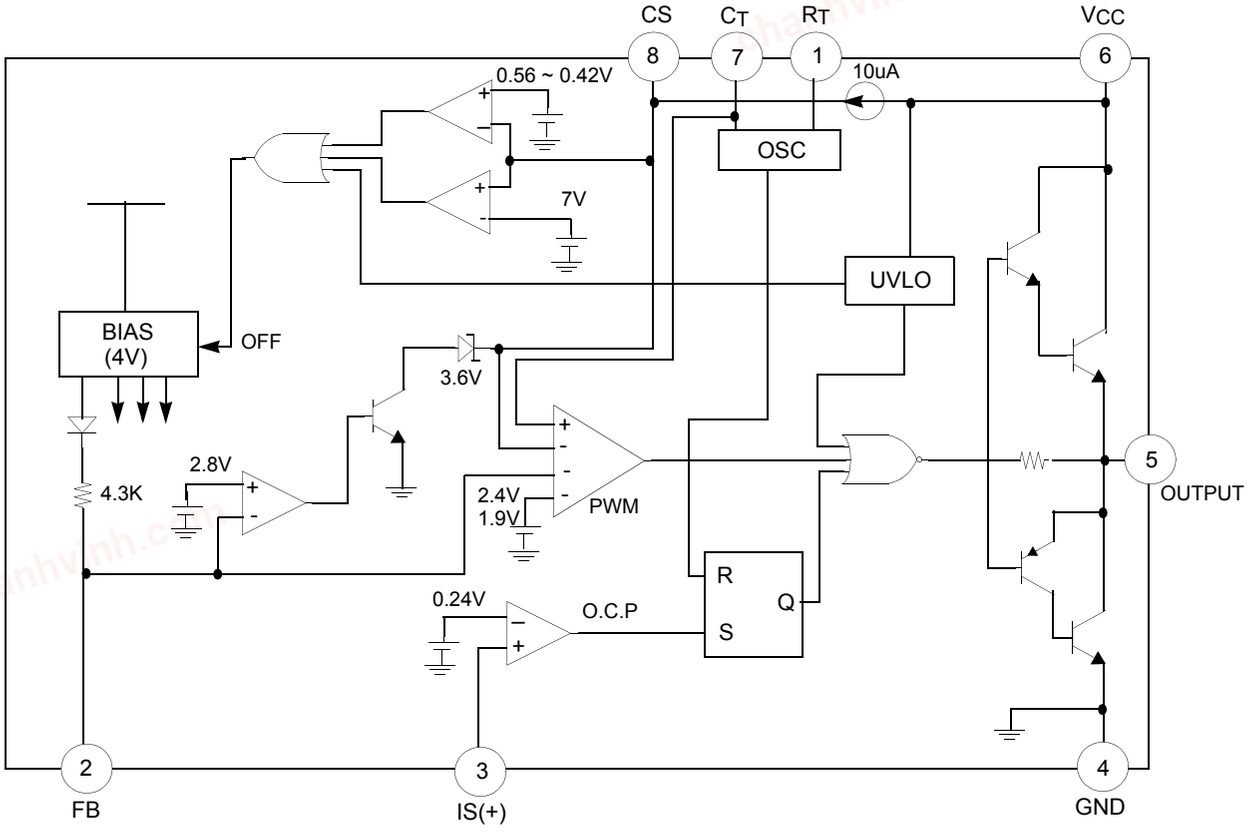

Rev. 1.0.2

©2004 Fairchild Semiconductor Corporation

chanhvinh.com

Absolute Maximum Ratings

Parameter	Symbol	Value	Unit
Supply voltage	V_{CC}	30	V
Output current	I_O	±1.5	A
Input voltage at overcurrent detection pin	$V_{IN(IS)}$	-0.3 to 4	V
Input voltage at FB pin	$V_{IN(FB)}$	4	V
Input current at CS pin	$I_{IN(CS)}$	2	mA
Total power dissipation (Ta = 25°C)	P_D	800	mW
Operating temperature	T_{OPR}	-25 to 85	°C
Storage temperature range	T_{STG}	-65 to 150	°C
Junction temperature	T_j	+125	°C

Electrical Characteristics

(V_{CC} = 18V, F_{OSC} = 135kHz, T_A = 25°C, unless otherwise specified)

Parameter	Symbol	Conditions	Min.	Typ.	Max.	Unit
OSCILLATOR SECTION						
Initial accuracy	F_{OSC}	C_T = 360pF, T_J = 25°C	125	135	145	kHz
Frequency variation 1	$\Delta F/\Delta V$	V_{CC} = 10V to 30V	-	±1	±3	%
Frequency variation 2(Note1)	$\Delta F/\Delta V$	T_A = 25°C to 85°C	-	±1.5	-	%
Ramp high voltage	V_{RH}	C_T = 360pF, T_J = 25°C	2.80	3.08	3.30	V
Ramp low voltage	V_{RL}	C_T = 360pF, T_J = 25°C	0.6	0.9	1.2	V
Amplitude	V_{OSC}	V_{PIN7}, peak to peak	1.80	2.18	2.50	V
PULSE WIDTH MODULATION SECTION						
Input threshold voltage(pin2)	$V_{TH(FBD)}$	Duty cycle = 0%	0.6	0.75	0.95	V
Input threshold voltage(pin2)(Note1)	$V_{TH(FB1)}$ (KA7552)	Duty cycle = Dmax 1	2.1	2.3	2.6	V
	$V_{TH(FB2)}$ (KA7553)	Duty cycle = Dmax 2	1.6	1.8	2.1	V
Max. duty cycle	$D_{(Max1)}$ (KA7552)	-	66	70	74	%
	$D_{(Max2)}$ (KA7553)	-	43	46	49	%
Source current(pin2)	$I_{SOURCE(FB)}$	V_{PIN2} = 0V	-660	-800	-960	uA
OVERCURRENT LIMIT SECTION						
Input threshold voltage	$V_{TH(IS)}$	-	0.21	0.24	0.27	V
Source current(pin3)	$I_{SOURCE(IS)}$	V_{PIN3} = 0V	-300	-200	-100	uA
Deley time(Note1)	T_D	-	-	150	-	ns
SOFT START SECTION						
Charging current	I_{CHG}	V_{PIN8} = 0V	-15	-10	-5	uA
Input threshold voltage(pin8)	$V_{TH(CSO)}$	-	0.7	0.9	1.1	V
Input threshold voltage(pin8)(Note1)	$V_{TH(CS1)}$ (KA7552)	Duty cycle = Dmax 1	2.2	2.4	2.6	V
	$V_{TH(CS2)}$ (KA7553)	Duty cycle = Dmax 2	1.7	1.9	2.1	V
LATCH MODE SHUTDOWN CIRCUIT SECTION						
Sink current(pin8)	$I_{SINK(CS)}$	V_{PIN8} = 6V, V_{PIN2} = 1V	25	45	65	uA
Shutdown threshold voltage	$V_{TH(SD,CS)}$	-	6.7	7.2	7.7	V
OVERLOAD SHUTDOWN SECTION						
Shutdown threshold voltage	$V_{TH(SD,FB)}$	-	2.6	2.8	3.1	V

chanhvinh.com

Electrical Characteristics (Continued)

(V_{CC} = 18V, F_{OSC} = 135kHz, T_A = 25°C, unless otherwise specified)

Parameter	Symbol	Conditions	Min.	Typ.	Max.	Unit
UNDER VOLTAGE LOCKOUT SECTION						
Start-up threshold voltage	$V_{TH(ST)}$	-	15.5	16.0	16.5	V
Minimum operating voltage	$V_{OPR(Min)}$	-	8.20	8.70	9.20	V
Hysteresis	V_{HYS}	-	6.40	7.30	8.20	V
ON/OFF CONTROL SECTION						
Source current(pin8)	$I_{SOURCE(CS)}$	V_{PIN8} = 0V	-15	-10	-5	uA
On threshold voltage	$V_{TH(ON)}$	V_{PIN8} : OFF->ON	0.45	0.56	0.70	V
Off threshold voltage	$V_{TH(OFF)}$	V_{PIN8} : ON -> OFF	0.30	0.42	0.55	V
OUTPUT SECTION						
Low output voltage	V_{OL}	I_O = 100mA, V_{CC} = 18V	-	1.3	1.8	V
High output voltage	V_{OH}	I_O = -100mA, V_{CC} = 18V	16.0	16.5	18.0	V
Rise time(Note1)	T_R	No load	-	50	-	ns
Fall time(Note1)	T_F	No load	-	50	-	ns
OVERALL						
Stand-by current	I_{SB}	V_{CC} = 14V	-	90	150	uA
Operating current	$I_{CC(OPR)}$	V_{PIN2} = 0V	-	9	15	mA
Power supply current off	$I_{CC(OFF)}$	V_{PIN8} = 0V	-	1.1	1.8	mA
Power supply current shutdown	$I_{CC(SD)}$	V_{PIN8} = 7.6V	-	1.1	1.8	mA

Note :

1. These parameters, although guaranteed, are not 100% tested in production.
2. Recommend operating condition :
   - Vcc(min) = 12V
   - R_T = 3.3kΩ ~ 10kΩ
   - Oscillation frequency = 5kHz ~ 600kHz
   - Soft start capacitor(C_S) = 0.1uF ~ 1uF

chanhvinh.com

Mechanical Dimensions

Package

Dimensions in millimeters

8-DIP

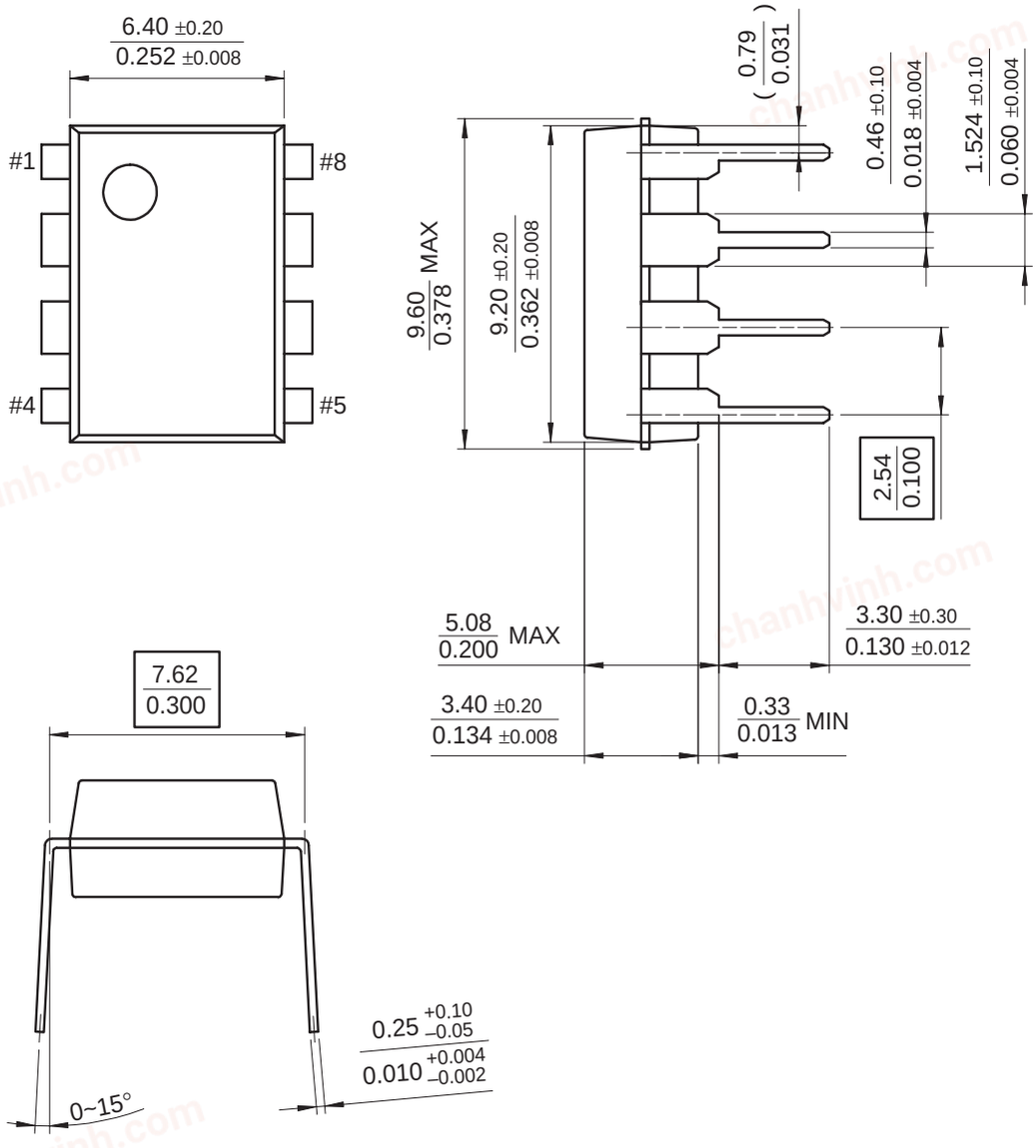

chanhvinh.com

Ordering Information

Product Number	Package	Operating Temperature
KA7552A	8-DIP	-25 ~ +85°C
KA7553A		

chanhvinh.com

DISCLAIMER

FAIRCHILD SEMICONDUCTOR RESERVES THE RIGHT TO MAKE CHANGES WITHOUT FURTHER NOTICE TO ANY PRODUCTS HEREIN TO IMPROVE RELIABILITY, FUNCTION OR DESIGN. FAIRCHILD DOES NOT ASSUME ANY LIABILITY ARISING OUT OF THE APPLICATION OR USE OF ANY PRODUCT OR CIRCUIT DESCRIBED HEREIN; NEITHER DOES IT CONVEY ANY LICENSE UNDER ITS PATENT RIGHTS, NOR THE RIGHTS OF OTHERS.

LIFE SUPPORT POLICY

FAIRCHILD'S PRODUCTS ARE NOT AUTHORIZED FOR USE AS CRITICAL COMPONENTS IN LIFE SUPPORT DEVICES OR SYSTEMS WITHOUT THE EXPRESS WRITTEN APPROVAL OF THE PRESIDENT OF FAIRCHILD SEMICONDUCTOR CORPORATION. As used herein:

1. Life support devices or systems are devices or systems which, (a) are intended for surgical implant into the body, or (b) support or sustain life, and (c) whose failure to perform when properly used in accordance with instructions for use provided in the labeling, can be reasonably expected to result in a significant injury of the user.
2. A critical component in any component of a life support device or system whose failure to perform can be reasonably expected to cause the failure of the life support device or system, or to affect its safety or effectiveness.

6/25/04 0.0m 001
Stock#DSxxxxxxxx
© 2003 Fairchild Semiconductor Corporation