chanhvinh.com

Share Feedback
Your Opinion Matters

DATA SHEET
www.onsemi.com

Low-Voltage Dual-Supply 4-Bit Voltage Translator with Configurable Voltage Supplies and Signal Levels, 3-State Outputs, and Auto Direction Sensing

FXLA0104

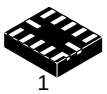

UQFN12 1.7x2.0, 0.4P
CASE 523AE

MARKING DIAGRAM

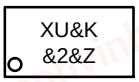

XU = Specific Device Code
&Z = Assembly Plant Code
&2 = 2−Digit Plant Code
&K = 2−Digits Lot Run Traceability Code

PIN CONFIGURATION

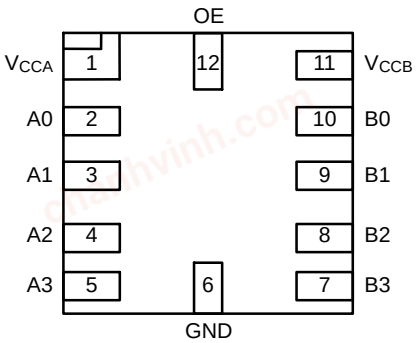

Top Through View

ORDERING INFORMATION

See detailed ordering and shipping information on page 12 of this data sheet.

Description

The FXLA0104 is a configurable dual−voltage supply translator for both uni−directional and bi−directional voltage translation between two logic levels. The device allows translation between voltages as high as 3.6 V to as low as 1.1 V. The A port tracks the V_{CCA} level and the B port tracks the V_{CCB} level. This allows for bi−directional voltage translation over a variety of voltage levels: 1.2 V, 1.5 V, 1.8 V, 2.5 V, and 3.3 V.

The device remains in three−state as long as either V_{CC} = 0 V, allowing either V_{CC} to be powered up first. Internal power−down control circuits place the device in 3−state if either V_{CC} is removed.

The OE input, when LOW, disables both the A and B ports by placing them in a 3−state condition. The OE input is supplied by V_{CCA}.

The FXLA0104 supports bi−directional translation without the need for a direction control pin. The two ports of the device have auto−direction sense capability. Either port may sense an input signal and transfer it as an output signal to the other port.

Features

- Bi−Directional Interface between Two Levels: from 1.1 V to 3.6 V
- Fully Configurable: Inputs and Outputs Track V_{CC}
- Non−Preferential Power−Up; Either V_{CC} May Be Powered Up First
- Outputs Switch to 3−State if Either V_{CC} is at GND
- Power−Off Protection
- Bus−Hold on Data Inputs Eliminates the Need for Pull−Up Resistors; Do Not Use Pull−Up Resistors on A or B Ports
- Control Input (OE) Referenced to V_{CCA} Voltage
- Available in the 12−Lead, 1.7 mm x 2.0 mm UMLP Package
- Direction Control Not Necessary
- 100 Mbps Throughput when Translating Between 1.8 V and 2.5 V
- ESD Protection Exceeds:
  - 6 kV HBM (per JESD22−A114 & Mil Std 883e 3015.7)
  - 2 kV CDM (per ESD STM 5.3)

Applications

- Cell Phone, PDA, Digital Camera, Portable GPS

© Semiconductor Components Industries, LLC, 2011

chanhvinh.com

PIN DEFINITIONS

Pin #	Name	Description
1	V_{CCA}	A−Side Power Supply
2	A0	A−Side Inputs or 3−State Outputs
3	A1	A−Side Inputs or 3−State Outputs
4	A2	A−Side Inputs or 3−State Outputs
5	A3	A−Side Inputs or 3−State Outputs
6	GND	Ground
7	B3	B−Side Inputs or 3−State Outputs
8	B2	B−Side Inputs or 3−State Outputs
9	B1	B−Side Inputs or 3−State Outputs
10	B0	B−Side Inputs or 3−State Outputs
11	V_{CCB}	B−Side Power Supply
12	OE	Output Enable Input

FUNCTIONAL DIAGRAM

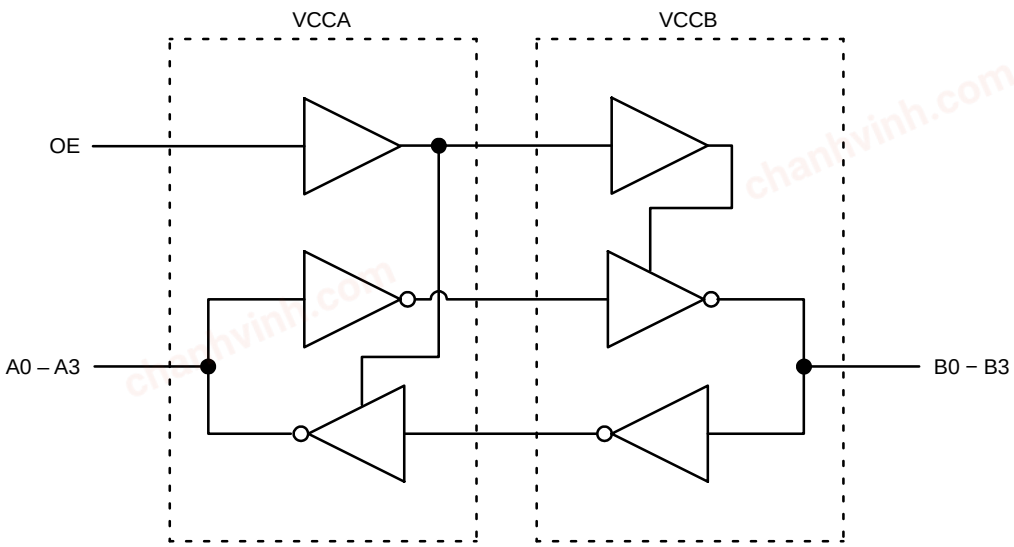

Figure 1. Functional Diagram

FUNCTION TABLE

Control	Outputs
OE	
LOW Logic Level	3−State
High Logic Level	Normal Operation

Share Feedback
Your Opinion Matters

chanhvinh.com

ABSOLUTE MAXIMUM RATINGS

Symbol	Parameter	Condition	Min	Max	Unit
V_{CC}	Supply Voltage	V_{CCA}	−0.5	4.6	V
		V_{CCB}	−0.5	4.6	
V_I	DC Input Voltage	I/O Ports A and B	−0.5	4.6	V
		Control Input (OE)	−0.5	4.6	
V_O	Output Voltage (Note 2)	Output 3−State	−0.5	4.6	V
		Output Active (A_n)	−0.5	V_{CCA} + 0.5	
		Output Active (B_n)	−0.5	V_{CCB} + 0.5	
I_{IK}	DC Input Diode Current	V_{IN} < 0 V	−	−50	mA
I_{OK}	DC Output Diode Current	V_O < 0 V, V_O > V_{CC}	−	±50	mA
I_{OH}/I_{OL}	DC Output Source/Sink Current		−	±50	mA
I_{CC}	DC V_{CC} or Ground Current (per Supply Pin)		−	±100	mA
T_{STG}	Storage Temperature Range		−65	+150	°C
P_D	Power Dissipation		−	17	mW
ESD	Electrostatic Discharge Capability	Human Body Model (per JESD22−A114 & Mil Std 883e 3015.7)	−	6	kV
		Charged Device Model (per ESD STM 5.3)	−	2	

Stresses exceeding those listed in the Maximum Ratings table may damage the device. If any of these limits are exceeded, device functionality should not be assumed, damage may occur and reliability may be affected.

1. I_O absolute maximum ratings must be observed.
2. All unused inputs and input/outputs must be held at V_{CCi} or GND.

RECOMMENDED OPERATING CONDITIONS

Symbol	Parameter	Condition	Min	Max	Unit
V_{CC}	Power Supply	Operating V_{CCA} or V_{CCB}	1.1	3.6	V
V_{IN}	Input Voltage	Ports A and B	0	V_{CCA}	V
		Control Input (OE)	0	3.6	V
T_A	Operating Temperature, Free Air		−40	+85	°C
dt/dV	Minimum Input Edge Rate	$V_{CCA/B}$ = 1.1 to 3.6 V	−	10	ns/V
Θ_{JA}	Thermal Resistance: Junction−to−Ambient		−	300	°C/W
Θ_{JC}	Thermal Resistance: Junction−to−Case		−	165	°C/W

Functional operation above the stresses listed in the Recommended Operating Ranges is not implied. Extended exposure to stresses beyond the Recommended Operating Ranges limits may affect device reliability.

POWER−UP/POWER−DOWN SEQUENCE

FXL translators offer an advantage in that either V_{CC} may be powered up first. This benefit derives from the chip design. When either V_{CC} is at 0 V, outputs are in a high−impedance state. The control input (OE) is designed to track the V_{CCA} supply.

The recommended power−up sequence is:

1. Apply power to the first V_{CC}.
2. Apply power to the second V_{CC}.
3. Drive the OE input HIGH to enable the device.

The recommended power−down sequence is:

1. Drive OE input LOW to disable the device.
2. Remove power from either V_{CC}.
3. Remove power from other V_{CC}.

PULL−UP/PULL−DOWN RESISTORS

Do not use pull−up or pull−down resistors. This device has bus−hold circuits: pull−up or pull−down resistors are not recommended because they interfere with the output state. The current through these resistors may exceed the hold drive, $I_{I(HOLD)}$ and/or $I_{I(OD)}$ bus−hold currents, resulting in data transition and/or auto−direction sensing failures. The bus−hold feature eliminates the need for extra resistors.

Share Feedback
Your Opinion Matters

chanhvinh.com

DC CHARACTERISTICS (T_A = −40 to 85°C)

Symbol	Parameter	Condition	V_{CCA} (V)	V_{CCB} (V)	Min	Typ	Max	Unit
V_{IHA}	High−Level Input Voltage	Data Inputs A_n Control Pin OE	2.70 to 3.60	1.10 to 3.60	2.00	−	−	V
			2.30 to 2.70		1.60	−	−	
			1.65 to 2.30		.65 x V_{CCA}	−	−	
			1.40 to 1.65		.65 x V_{CCA}	−	−	
			1.10 to 1.40		.90 x V_{CCA}	−	−	
V_{IHB}		Data Inputs B_n	1.10 to 3.60	2.70 to 3.60	2.00	−	−	V
				2.30 to 2.70	1.60	−	−	
				1.65 to 2.30	.65 x V_{CCB}	−	−	
				1.40 to 1.65	.65 x V_{CCB}	−	−	
				1.10 to 1.40	.90 x V_{CCB}	−	−	
V_{ILA}	Low−Level Input Voltage	Data Inputs A_n Control Pin OE	2.70 to 3.60	1.10 to 3.60	−	−	.80	V
			2.30 to 2.70		−	−	.70	
			1.65 to 2.30		−	−	.35 x V_{CCA}	
			1.40 to 1.65		−	−	.35 x V_{CCA}	
			1.10 to 1.40		−	−	.10 x V_{CCA}	
V_{ILB}		Data Inputs B_n	1.10 to 3.60	2.70 to 3.60	−	−	.80	V
				2.30 to 2.70	−	−	.70	
				1.65 to 2.30	−	−	.35 x V_{CCB}	
				1.40 to 1.65	−	−	.35 x V_{CCB}	
				1.10 to 1.40	−	−	.10 x V_{CCB}	
V_{OHA}	High−Level Output Voltage (Note 3)	I_{OH} = −4 μA	1.10 to 3.60	1.10 to 3.60	V_{CCA} − .4	−	−	V
V_{OHB}		I_{OH} = −4 μA	1.10 to 3.60	1.10 to 3.60	V_{CCB} − .4	−	−	
V_{OLA}	Low−Level Output Voltage (Note 3)	I_{OL} = 4 μA	1.10 to 3.60	1.10 to 3.60	−	−	.4	V
V_{OLB}		I_{OL} = 4 μA	1.10 to 3.60	1.10 to 3.60	−	−	.4	
$I_{I(HOLD)}$	Bus−Hold Input Minimum Drive Current	V_{IN} = 0.8 V	3.00	3.00	75.0	−	−	μA
		V_{IN} = 2.0 V	3.00	3.00	−75.0	−	−	
		V_{IN} = 0.7 V	2.30	2.30	45.0	−	−	
		V_{IN} = 1.6 V	2.30	2.30	−45.0	−	−	
		V_{IN} = 0.57 V	1.65	1.65	25.0	−	−	
		V_{IN} = 1.07 V	1.65	1.65	−25.0	−	−	
		V_{IN} = 0.49 V	1.40	1.40	11.0	−	−	
		V_{IN} = .91 V	1.40	1.40	−11.0	−	−	
		V_{IN} = 0.11 V	1.10	1.10	−	4.0	−	
		V_{IN} = 0.99 V	1.10	1.10	−	−4.0	−	
$I_{I(ODH)}$	Bus−Hold Input Overdrive High Current (Note 4)	Data Inputs A_n, B_n	3.60	3.60	450.0	−	−	μA
			2.70	2.70	300.0	−	−	
			1.95	1.95	200.0	−	−	
			1.60	1.60	120.0	−	−	
			1.40	1.40	80.0	−	−	

Share Feedback
Your Opinion Matters

chanhvinh.com

DC CHARACTERISTICS (T_A = −40 to 85°C) (continued)

Symbol	Parameter	Condition	V_{CCA} (V)	V_{CCB} (V)	Min	Typ	Max	Unit
$I_{I(ODL)}$	Bus−Hold Input Overdrive Low Current (Note 5)	Data Inputs A_n, B_n	3.60	3.60	−450.0	−	−	μA
			2.70	2.70	−300.0	−	−	
			1.95	1.95	−200.0	−	−	
			1.60	1.60	−120.0	−	−	
			1.40	1.40	−80.0	−	−	
I_I	Input Leakage Current	Control Inputs OE, $V_I = V_{CCA}$ or GND	1.10 to 3.60	3.60	−	−	±1.0	μA
I_{OFF}	Power−Off Leakage Current	A_n V_O = 0 V to 3.6 V	0	3.60	−	−	±2.0	μA
		B_n V_O = 0 V to 3.6 V	3.60	0	−	−	±2.0	
I_{OZ}	3−State Output Leakage	A_n, B_n V_O = 0 V or 3.6 V, OE = V_{IL}	3.60	3.60	−	−	±5.0	μA
		A_n V_O = 0 V or 3.6 V, OE = V_{CCA}	3.60	0	−	−	±5.0	
		B_n V_O = 0 V or 3.6 V, OE = 3.6 V	0	3.60	−	−	±5.0	
$I_{CCA/B}$	Quiescent Supply Current (Note 6, 7)	$V_I = V_{CCI}$ or GND; I_O = 0, OE = V_{IH}	1.10 to 3.60	1.10 to 3.60	−	−	10.0	μA
I_{CCZ}		$V_I = V_{CCI}$ or GND; I_O = 0, OE = GND	1.10 to 3.60	1.10 to 3.60	−	−	10.0	μA
I_{CCA}	Quiescent Supply Current	$V_I = V_{CCB}$ or GND; I_O = 0, B−to−A Direction; OE = V_{IH}	0	1.10 to 3.60	−	−	−10.0	μA
		$V_I = V_{CCA}$ or GND; I_O = 0, A−to−B Direction	1.10 to 3.60	0	−	−	10.0	
I_{CCB}		$V_I = V_{CCA}$ or GND; I_O = 0, A−to−B Direction, OE = V_{IH}	1.10 to 3.60	0	−	−	−10.0	μA
		$V_I = V_{CCB}$ or GND; I_O = 0, B−to−A Direction	0	1.10 to 3.60	−	−	10.0	

3. This is the output voltage for static conditions. Dynamic drive specifications are given in the Dynamic Output Electrical Characteristics table.
4. An external drive must source at least the specified current to switch LOW−to−HIGH.
5. An external drive must source at least the specified current to switch HIGH−to−LOW.
6. V_{CCI} is the V_{CC} associated with the input side.
7. Reflects current per supply, V_{CCA} or V_{CCB}.

Share Feedback
Your Opinion Matters

chanhvinh.com

DYNAMIC OUTPUT ELECTRICAL CHARACTERISTIC

Symbol	Parameter	V_{CCB} = 3.0 V to 3.6 V		V_{CCB} = 2.3 V to 2.7 V		V_{CCB} = 1.65 V to 1.95 V		V_{CCB} = 1.4 V to 1.6 V		V_{CCB} = 1.1 V to 1.3 V	Unit
		Typ	Max	Typ	Max	Typ	Max	Typ	Max	Typ	
A PORT (A_n) OUTPUT LOAD: C_L = 15 pF, R_L ≥ 1 MΩ ($C_{I/O}$ = 4 pF), T_A = −40 to 85°C											
t_{rise}	Output Rise Time A Port (Note 9)	−	3.0	−	3.5	−	4.0	−	5.0	7.5	ns
t_{fall}	Output Fall Time A Port (Note 10)	−	3.0	−	3.5	−	4.0	−	5.0	7.5	ns
I_{OHD}	Dynamic Output Current High (Note 9)	−11.4	−	−7.5	−	−4.7	−	−3.2	−	−1.7	mA
I_{OLD}	Dynamic Output Current Low (Note 10)	+11.4	−	+7.5	−	+4.7	−	+3.2	−	+1.7	mA
B PORT (B_n) OUTPUT LOAD: C_L = 15 pF, R_L ≥ 1 MΩ ($C_{I/O}$ = 5 pF), T_A = −40 to 85°C											
t_{rise}	Output Rise Time B Port (Note 9)	−	3.0	−	3.5	−	4.0	−	5.0	7.5	ns
t_{fall}	Output Fall Time B Port (Note 10)	−	3.0	−	3.5	−	4.0	−	5.0	7.5	ns
I_{OHD}	Dynamic Output Current High (Note 9)	−12.0	−	−7.9	−	−5.0	−	−3.4	−	−1.8	mA
I_{OLD}	Dynamic Output Current Port (Note 10)	+12.0	−	+7.9	−	+5.0	−	+3.4	−	+1.8	mA

8. Dynamic output characteristics are guaranteed, but not tested.
9. *See Figure 6.*
10. *See Figure 7.*

Share Feedback
Your Opinion Matters

chanhvinh.com

AC CHARACTERISTICS

Symbol	Parameter	V_{CCB} = 3.0 V to 3.6 V		V_{CCB} = 2.3 V to 2.7 V		V_{CCB} = 1.65 V to 1.95 V		V_{CCB} = 1.4 V to 1.6 V		V_{CCB} = 1.1 V to 1.3 V	Unit
		Typ	Max	Typ	Max	Typ	Max	Typ	Max	Typ	
V_{CCA} = 3.0 V to 3.6 V, T_A = −40 to 85°C											
t_{PLH},t_{PHL}	A to B	0.2	4.0	0.3	4.2	0.5	5.4	0.6	6.8	6.9	ns
	B to A	0.2	4.0	0.2	4.1	0.3	5.0	0.5	6.0	4.5	ns
t_{PZL},t_{PZH}	OE to A, OE to B	–	1.7	–	1.7	–	1.7	–	1.7	1.7	μs
t_{SKEW}	A Port, B Port (Note 11)	–	0.5	–	0.5	–	0.5	–	1.0	1.0	ns
V_{CCA} = 2.3 V to 2.7 V, T_A = −40 to 85°C											
t_{PLH},t_{PHL}	A to B	0.2	4.1	0.4	4.5	0.5	5.6	0.8	6.9	7.0	ns
	B to A	0.3	4.2	0.4	4.5	0.5	5.5	0.5	6.5	4.8	ns
t_{PZL},t_{PZH}	OE to A, OE to B	–	1.7	–	1.7	–	1.7	–	1.7	1.7	μs
t_{SKEW}	A Port, B Port (Note 11)	–	0.5	–	0.5	–	0.5	–	1.0	1.0	ns
V_{CCA} = 1.65 V to 1.95 V, T_A = −40 to 85°C											
t_{PLH},t_{PHL}	A to B	0.3	5.0	0.5	5.5	0.8	6.7	0.9	7.5	7.5	ns
	B to A	0.5	5.4	0.5	5.6	0.8	6.7	1.0	7.0	5.4	ns
t_{PZL},t_{PZH}	OE to A, OE to B	–	1.7	–	1.7	–	1.7	–	1.7	1.7	μs
t_{SKEW}	A Port, B Port (Note 11)	–	0.5	–	0.5	–	0.5	–	1.0	1.0	ns
V_{CCA} = 1.4 V to 1.6 V, T_A = −40 to 85°C											
t_{PLH},t_{PHL}	A to B	0.5	6.0	0.5	6.5	1.0	7.0	1.0	8.5	7.9	ns
	B to A	0.6	6.8	0.8	6.9	0.9	7.5	1.0	8.5	6.1	ns
t_{PZL},t_{PZH}	OE to A, OE to B	–	1.7	–	1.7	–	1.7	–	1.7	1.7	μs
t_{SKEW}	A Port, B Port (Note 11)	–	1.0	–	1.0	–	1.0	–	1.0	1.0	ns
		Typ		**Typ**		**Typ**		**Typ**		**Typ**	
V_{CCA} = 1.1 V to 1.3 V, T_A = −40 to 85°C											
t_{PLH},t_{PHL}	A to B	4.6		4.8		5.4		6.2		9.2	ns
	B to A	6.8		7.0		7.4		7.8		9.1	ns
t_{PZL},t_{PZH}	OE to A, OE to B	1.7		1.7		1.7		1.7		1.7	μs
t_{SKEW}	A Port, B Port (Note 11)	1.0		1.0		1.0		1.0		1.0	ns

11. Skew is the variation of propagation delay between output signals and applies only to output signals on the same port (A_n or B_n) and switching with the same polarity (LOW−to−HIGH or HIGH−to−LOW) *(see Figure 9)*. Skew is guaranteed, but not tested.

Share Feedback
Your Opinion Matters

chanhvinh.com

MAXIMUM DATA RATE (T_A = −40 to 85°C) (Note 12, 13)

V_{CCA}	V_{CCB} = 3.0 V to 3.6 V	V_{CCB} = 2.3 V to 2.7 V	V_{CCB} = 1.65 V to 1.95 V	V_{CCB} = 1.4 V to 1.6 V	V_{CCB} = 1.1 V to 1.3 V	Unit
	Min	Min	Min	Min	Typ	
V_{CCA} = 3.00 to 3.60 V	140	120	100	80	40	Mbps
V_{CCA} = 2.30 to 2.70 V	120	120	100	80	40	Mbps
V_{CCA} = 1.65 to 1.95 V	100	100	80	60	40	Mbps
V_{CCA} = 1.40 to 1.60 V	80	80	60	60	40	Mbps
	Typ	Typ	Typ	Typ	Typ	
V_{CCA} = 1.10 to 1.30 V	40	40	40	40	40	Mbps

12. Maximum data rate is guaranteed, but not tested.
13. Maximum data rate is specified in megabits per second *(see Figure 8)*. It is equivalent to tw o times the F−toggle frequency, specified in megahertz. For example, 100 Mbps is equivalent to 50 MHz.

CAPACITANCE

Symbol	Parameter		Conditions	T_A = +25°C Typical	Unit
C_{IN}	Input Capacitance Control Pin (OE)		V_{CCA} = V_{CCB} = GND	3	pF
$C_{I/O}$	Input/Output Capacitance	A_n	V_{CCA} = V_{CCB} = 3.3 V, OE = GND	4	pF
		B_n		5	
C_{pd}	Power Dissipation Capacitance		V_{CCA} = V_{CCB} = 3.3 V, V_I = 0 V or V_{CC}, f = 10 MHz	25	pF

I/O Architecture Benefit

The FXLA0104 I/O architecture benefits the end user, beyond level translation, in the following three ways:

Auto Direction without an external direction pin.

Drive Capacitive Loads. Automatically shifts to a higher current drive mode only during “Dynamic Mode” or HL / LH transitions.

Lower Power Consumption. Automatically shifts to low−power mode during “Static Mode” (no transitions), lowering power consumption.

The FXLA0104 does not require a direction pin. Instead, the I/O architecture detects input transitions on both side and automatically transfers the data to the corresponding output. For example, for a given channel, if both A and B side are at a static LOW, the direction has been established as A → B, and a LH transition occurs on the B port; the FXLA0104 internal I/O architecture automatically changes direction from A → B to B → A.

During HL / LH transitions, or “Dynamic Mode,” a strong output driver drives the output channel in parallel with a weak output driver. After a typical delay of approximately 10 ns − 50 ns, the strong driver is turned off, leaving the weak driver enabled for holding the logic state of the channel. This weak driver is called the “bus hold.” “Static Mode” is when only the bus hold drives the channel. The bus hold can be over ridden in the event of a direction change. The strong driver allows the FXLA0104 to quickly charge and discharge capacitive transmission lines during dynamic mode. Static mode conserves power, where I_{CC} is typically <5 μA.

Bus Hold Minimum Drive Current

Specifies the minimum amount of current the bus hold driver can source/sink. The bus hold minimum drive current (I_{IHOLD}) is V_{CC} dependent and guaranteed in the DC Electrical tables. The intent is to maintain a valid output state in a static mode, but that can be overridden when an input data transition occurs.

Bus Hold Input Overdrive Drive Current

Specifies the minimum amount of current required (by an external device) to overdrive the bus hold in the event of a direction change. The bus hold overdrive (I_{IODH}, I_{IODL}) is V_{CC} dependent and guaranteed in the DC Electrical tables.

Dynamic Output Current

The strength of the output driver during LH / HL transitions is referenced on page 6, *Dynamic Output Electrical Characteristics, I_{OHD}, and I_{OLD}*.

Share Feedback
Your Opinion Matters

chanhvinh.com

Test Diagrams

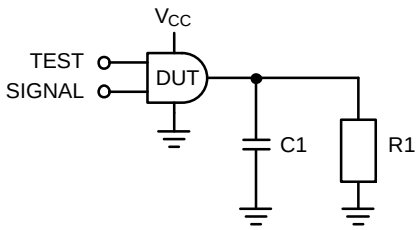

Figure 2. Test Circuit

Table 1. AC TEST CONDITIONS

Test	Input Signal	Output Enable Control
t_{PLH}, t_{PHL}	Data Pulses	V_{CCA}
t_{PZL}	0 V	LOW to HIGH Switch
t_{PZH}	V_{CCI}	LOW to HIGH Switch

Table 2. AC LOAD

V_{CCo}	C1	R1
1.2 V ±0.1 V	15 pF	1 MΩ
1.5 V ±0.1 V	15 pF	1 MΩ
1.8 V ±0.15 V	15 pF	1 MΩ
2.5 V ±0.2 V	15 pF	1 MΩ
3.3 V ±0.3 V	15 pF	1 MΩ

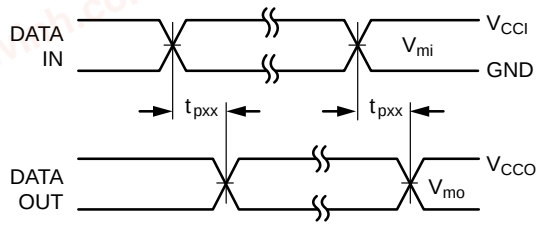

Figure 3. Waveform for Inverting and Non−Inverting Functions

NOTES:
14. Input $t_R = t_F$ = 2.0 ns, 10% to 90%.
15. Input $t_R = t_F$ = 2.5 ns, 10% to 90%, at V_I = 3.0 V to 3.6 V only.

Share Feedback
Your Opinion Matters

chanhvinh.com

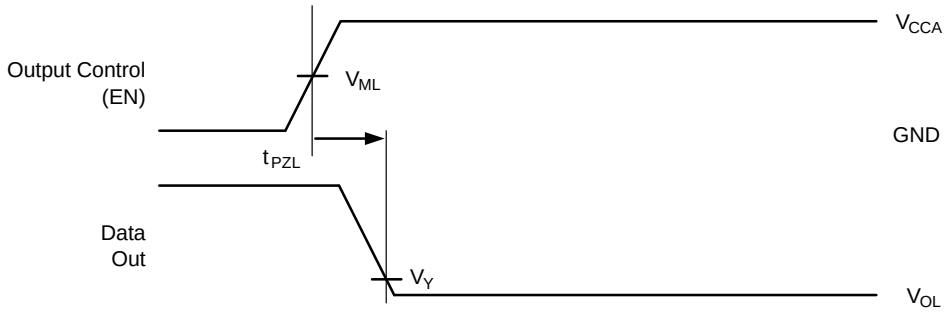

Figure 4. 3−State Output Low Enable

NOTES:
16. Input $t_R = t_F$ = 2.0 ns, 10% to 90%.
17. Input $t_R = t_F$ = 2.5 ns, 10% to 90%, at V_I = 3.0 V to 3.6 V only.

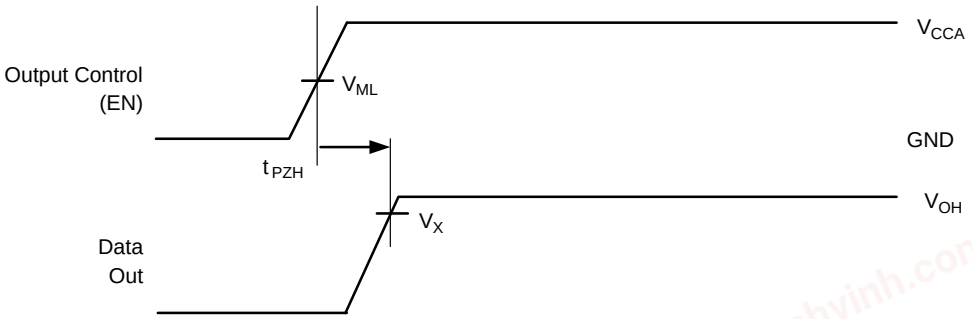

Figure 5. 3−State Output High Enable

NOTES:
18. Input $t_R = t_F$ = 2.0 ns, 10% to 90%.
19. Input $t_R = t_F$ = 2.5 ns, 10% to 90%, at V_I = 3.0 V to 3.6 V only.

Table 3. TEST MEASURE POINTS

Symbol	V_{DD}
V_{MI} (Note 20)	V_{CCI} / 2
V_{MO}	V_{CCo} / 2
V_X	0.9 x V_{CCo}
V_Y	0.1 x V_{CCo}

20. V_{CCI} = V_{CCA} for control pin OE or V_{MI} (V_{CCA} / 2).

Share Feedback
Your Opinion Matters

chanhvinh.com

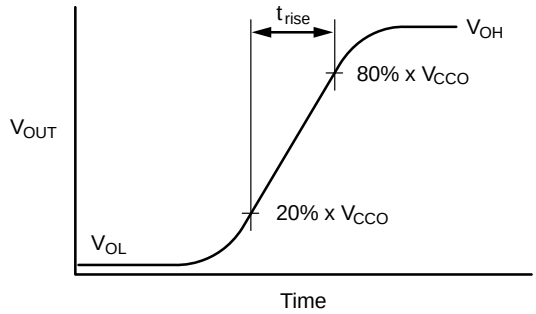

$$I_{OHD} \approx \left(C_L + C_{I/O}\right) \times \frac{\Delta V_{OUT}}{\Delta t} = \left(C_L + C_{I/O}\right) \times \frac{(20\% - 80\%) \cdot V_{CCO}}{t_{RISE}}$$

Figure 6. Active Output Rise Time and Dynamic Output Current High

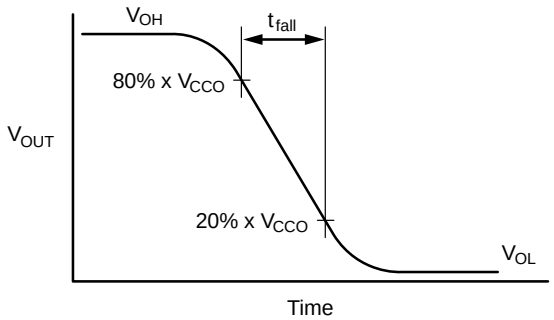

$$I_{OLD} \approx \left(C_L + C_{I/O}\right) \times \frac{\Delta V_{OUT}}{\Delta t} = \left(C_L + C_{I/O}\right) \times \frac{(80\% - 20\%) \cdot V_{CCO}}{t_{FALL}}$$

Figure 7. Active Output Fall Time and Dynamic Output Current Low

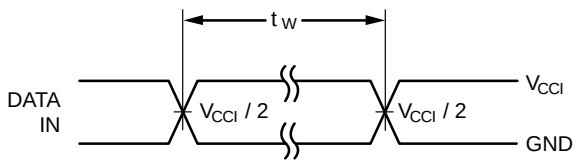

Maximum Data Rate, f = 1 / t_W

Figure 8. Maximum Data Rate

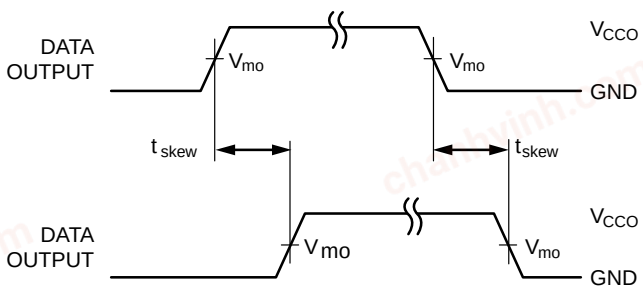

Figure 9. Output Skew Time

NOTES:

21. $t_{SKEW} = (t_{pHLmax} - t_{pHLmin})$ or $(t_{pLHmax} - t_{pLHmin})$

Share Feedback
Your Opinion Matters

chanhvinh.com

ORDERING INFORMATION

Part Number	Operating Temperature Range	Top Mark	Package	Shipping†
FXLA0104QFX	−40 to 85°C	XU	12−Lead, 1.7 mm x 2.0 mm Ultrathin Molded Leadless Package (UMLP) (Pb−Free, Halide Free)	5000 Units / Tape & Reel

†For information on tape and reel specifications, including part orientation and tape sizes, please refer to our Tape and Reel Packaging Specifications Brochure, BRD8011/D.

Share Feedback
Your Opinion Matters

chanhvinh.com

MECHANICAL CASE OUTLINE
PACKAGE DIMENSIONS

UQFN12 1.7x2.0, 0.4P
CASE 523AE
ISSUE A

DATE 11 JUN 2007



SCALE 4:1

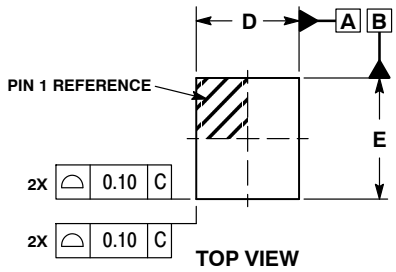

TOP VIEW

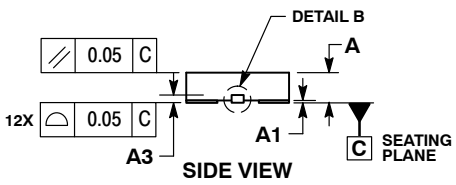

SIDE VIEW

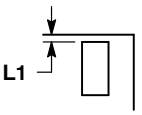

DETAIL A
NOTE 5

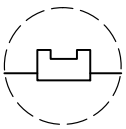

DETAIL B
OPTIONAL CONSTRUCTION

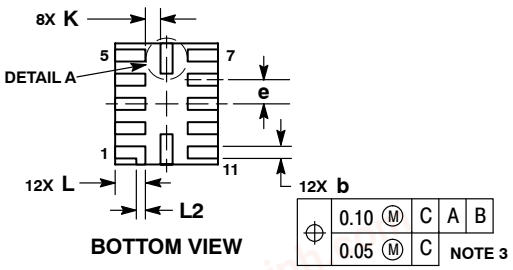

BOTTOM VIEW

NOTES:
1. DIMENSIONING AND TOLERANCING PER ASME Y14.5M, 1994.
2. CONTROLLING DIMENSION: MILLIMETERS
3. DIMENSION b APPLIES TO PLATED TERMINAL AND IS MEASURED BETWEEN 0.15 AND 0.30 MM FROM TERMINAL TIP.
4. MOLD FLASH ALLOWED ON TERMINALS ALONG EDGE OF PACKAGE. FLASH 0.03 MAX ON BOTTOM SURFACE OF TERMINALS.
5. DETAIL A SHOWS OPTIONAL CONSTRUCTION FOR TERMINALS.

DIM	MILLIMETERS MIN	MAX
A	0.45	0.55
A1	0.00	0.05
A3	0.127 REF	
b	0.15	0.25
D	1.70 BSC	
E	2.00 BSC	
e	0.40 BSC	
K	0.20	----
L	0.45	0.55
L1	0.00	0.03
L2	0.15 REF	

GENERIC MARKING DIAGRAM*

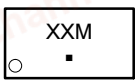

XX = Specific Device Code
M = Date Code
▪ = Pb−Free Package

*This information is generic. Please refer to device data sheet for actual part marking. Pb−Free indicator, “G” or microdot “ ▪”, may or may not be present.

MOUNTING FOOTPRINT
SOLDERMASK DEFINED

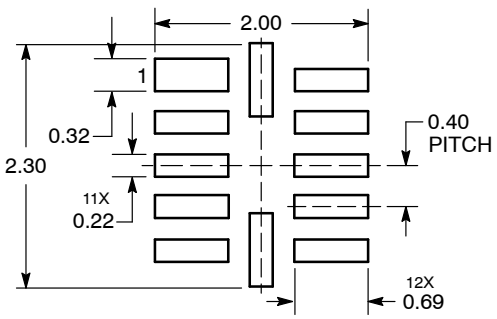

DIMENSIONS: MILLIMETERS

DOCUMENT NUMBER:	**98AON23418D**	Electronic versions are uncontrolled except when accessed directly from the Document Repository. Printed versions are uncontrolled except when stamped “CONTROLLED COPY” in red.
DESCRIPTION:	**UQFN12 1.7 X 2.0, 0.4P**	**PAGE 1 OF 1**

onsemi and onsemi are trademarks of Semiconductor Components Industries, LLC dba **onsemi** or its subsidiaries in the United States and/or other countries. **onsemi** reserves the right to make changes without further notice to any products herein. **onsemi** makes no warranty, representation or guarantee regarding the suitability of its products for any particular purpose, nor does **onsemi** assume any liability arising out of the application or use of any product or circuit, and specifically disclaims any and all liability, including without limitation special, consequential or incidental damages. **onsemi** does not convey any license under its patent rights nor the rights of others.

© Semiconductor Components Industries, LLC, 2007

chanhvinh.com

onsemi, ONSEMI., and other names, marks, and brands are registered and/or common law trademarks of Semiconductor Components Industries, LLC dba "**onsemi**" or its affiliates and/or subsidiaries in the United States and/or other countries. **onsemi** owns the rights to a number of patents, trademarks, copyrights, trade secrets, and other intellectual property. A listing of **onsemi**'s product/patent coverage may be accessed at www.onsemi.com/site/pdf/Patent−Marking.pdf. **onsemi** reserves the right to make changes at any time to any products or information herein, without notice. The information herein is provided "as−is" and **onsemi** makes no warranty, representation or guarantee regarding the accuracy of the information, product features, availability, functionality, or suitability of its products for any particular purpose, nor does **onsemi** assume any liability arising out of the application or use of any product or circuit, and specifically disclaims any and all liability, including without limitation special, consequential or incidental damages. Buyer is responsible for its products and applications using **onsemi** products, including compliance with all laws, regulations and safety requirements or standards, regardless of any support or applications information provided by **onsemi**. "Typical" parameters which may be provided in **onsemi** data sheets and/or specifications can and do vary in different applications and actual performance may vary over time. All operating parameters, including "Typicals" must be validated for each customer application by customer's technical experts. **onsemi** does not convey any license under any of its intellectual property rights nor the rights of others. **onsemi** products are not designed, intended, or authorized for use as a critical component in life support systems or any FDA Class 3 medical devices or medical devices with a same or similar classification in a foreign jurisdiction or any devices intended for implantation in the human body. Should Buyer purchase or use **onsemi** products for any such unintended or unauthorized application, Buyer shall indemnify and hold **onsemi** and its officers, employees, subsidiaries, affiliates, and distributors harmless against all claims, costs, damages, and expenses, and reasonable attorney fees arising out of, directly or indirectly, any claim of personal injury or death associated with such unintended or unauthorized use, even if such claim alleges that **onsemi** was negligent regarding the design or manufacture of the part. **onsemi** is an Equal Opportunity/Affirmative Action Employer. This literature is subject to all applicable copyright laws and is not for resale in any manner.

ADDITIONAL INFORMATION

TECHNICAL PUBLICATIONS:
Technical Library: www.onsemi.com/design/resources/technical−documentation
onsemi Website: www.onsemi.com

ONLINE SUPPORT: www.onsemi.com/support
For additional information, please contact your local Sales Representative at
www.onsemi.com/support/sales