chanhvinh.com

FAIRCHILD SEMICONDUCTOR®

November 2013

FDB2710

N-Channel PowerTrench® MOSFET

250 V, 50 A, 42.5 mΩ

Features

- $R_{DS(on)}$ = 36.3 mΩ (Typ.)@ V_{GS} = 10 V, I_D = 25 A
- High Performance Trench Technology for Extremely Low $R_{DS(on)}$
- Low Gate Charge
- High Power and Current Handing Capability

General Description

This N-Channel MOSFET is produced using Fairchild Semiconductor's PowerTrench® process that has been tailored to minimize the on-state resistance while maintaining superior switching performance.

Applications

- Synchronous Rectification
- Battery Protection Circuit
- Motor Drives and Uninterruptible Power Supplies

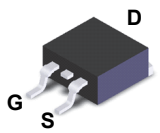

D^2-PAK

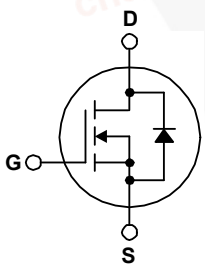

Absolute Maximum Ratings

T_C = 25°C unless otherwise noted

Symbol	Parameter		FDB2710	Unit
V_{DS}	Drain-Source Voltage		250	V
V_{GS}	Gate-Source voltage		± 30	V
I_D	Drain Current	- Continuous (T_C = 25°C) - Continuous (T_C = 100°C)	50 31.3	A A
I_{DM}	Drain Current	- Pulsed (Note 1)	See Figure 9	A
E_{AS}	Single Pulsed Avalanche Energy	(Note 2)	145	mJ
dv/dt	Peak Diode Recovery dv/dt	(Note 3)	4.5	V/ns
P_D	Power Dissipation	(T_C = 25°C) - Derate above 25°C	260 2.1	W W/°C
T_J, T_{STG}	Operating and Storage Temperature Range		-55 to +150	°C
T_L	Maximum Lead Temperature for Soldering Purpose, 1/8" from Case for 5 Seconds		300	°C

Thermal Characteristics

Symbol	Parameter	FDB2710	Unit
$R_{\theta JC}$	Thermal Resistance, Junction-to-Case, Max.	0.48	°C/W
$R_{\theta JA}$	Thermal Resistance, Junction to Ambient (minimum pad of 2 oz copper), Max.	62.5	°C/W
$R_{\theta JA}$	Thermal Resistance, Junction to Ambient (1 in^2 pad of 2 oz copper), Max.	40	°C/W

©2006 Fairchild Semiconductor Corporation

chanhvinh.com

Package Marking and Ordering Information

Device Marking	Device	Package	Reel Size	Tape Width	Quantity
FDB2710	FDB2710	D^2-PAK	330 mm	24 mm	800 units

Electrical Characteristics

T_C = 25°C unless otherwise noted

Symbol	Parameter	Conditions	Min	Typ	Max	Unit
Off Characteristics						
BV_{DSS}	Drain-Source Breakdown Voltage	V_{GS} = 0V, I_D = 250μA, T_J = 25°C	250	--	--	V
ΔBV_{DSS} / ΔT_J	Breakdown Voltage Temperature Coefficient	I_D = 250μA, Referenced to 25°C	--	0.25	--	V/°C
I_{DSS}	Zero Gate Voltage Drain Current	V_{DS} = 250V, V_{GS} = 0V V_{DS} = 250V, V_{GS} = 0V,T_C = 125°C	-- --	-- --	1 500	μA μA
I_{GSSF}	Gate-Body Leakage Current, Forward	V_{GS} = 30V, V_{DS} = 0V	--	--	100	nA
I_{GSSR}	Gate-Body Leakage Current, Reverse	V_{GS} = -30V, V_{DS} = 0V	--	--	-100	nA
On Characteristics						
$V_{GS(th)}$	Gate Threshold Voltage	V_{DS} = V_{GS}, I_D = 250μA	3.0	4.0	5.0	V
$R_{DS(on)}$	Static Drain-Source On-Resistance	V_{GS} = 10V, I_D = 25A	--	36.3	42.5	mΩ
g_{FS}	Forward Transconductance	V_{DS} = 10V, I_D = 25A	--	63	--	S
Dynamic Characteristics						
C_{iss}	Input Capacitance	V_{DS} = 25V, V_{GS} = 0V, f = 1.0MHz	--	5470	7280	pF
C_{oss}	Output Capacitance		--	426	570	pF
C_{rss}	Reverse Transfer Capacitance		--	97	146	pF
Switching Characteristics						
$t_{d(on)}$	Turn-On Delay Time	V_{DD} = 125V, I_D = 50A V_{GS} = 10V, R_{GEN} = 25Ω	--	80	170	ns
t_r	Turn-On Rise Time		--	252	515	ns
$t_{d(off)}$	Turn-Off Delay Time		--	112	235	ns
t_f	Turn-Off Fall Time	(Note 4)	--	154	320	ns
Q_g	Total Gate Charge	V_{DS} = 125V, I_D = 50A V_{GS} = 10V	--	78	101	nC
Q_{gs}	Gate-Source Charge		--	34	--	nC
Q_{gd}	Gate-Drain Charge	(Note 4)	--	18	--	nC
Drain-Source Diode Characteristics and Maximum Ratings						
I_S	Maximum Continuous Drain-Source Diode Forward Current		--	--	50	A
I_{SM}	Maximum Pulsed Drain-Source Diode Forward Current		--	--	150	A
V_{SD}	Drain-Source Diode Forward Voltage	V_{GS} = 0V, I_S = 50A	--	--	1.2	V
t_{rr}	Reverse Recovery Time	V_{GS} = 0V, I_S = 50A dI_F/dt =100A/μs	--	163	--	ns
Q_{rr}	Reverse Recovery Charge		--	1.3	--	μC

Notes:

1. Repetitive Rating: Pulse width limited by maximum junction temperature
2. L = 1mH, I_{AS} = 17A, V_{DD} = 50V, R_G = 25Ω, Starting T_J = 25°C
3. I_{SD} ≤ 50A, di/dt ≤ 100A/μs, V_{DD} ≤ BV_{DSS}, Starting T_J = 25°C
4. Essentially Independent of Operating Temperature Typical Characteristics

©2006 Fairchild Semiconductor Corporation

chanhvinh.com

Typical Performance Characteristics

Figure 1. On-Region Characteristics

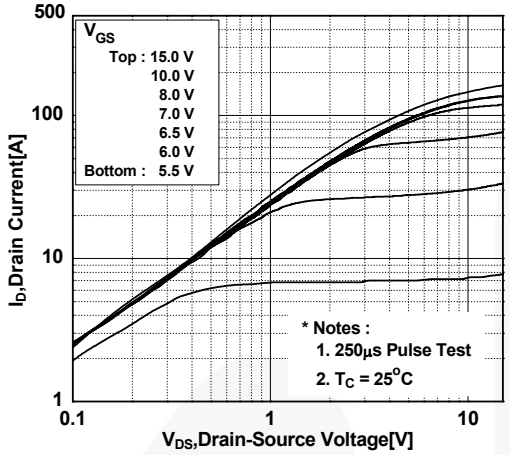

Figure 2. Transfer Characteristics

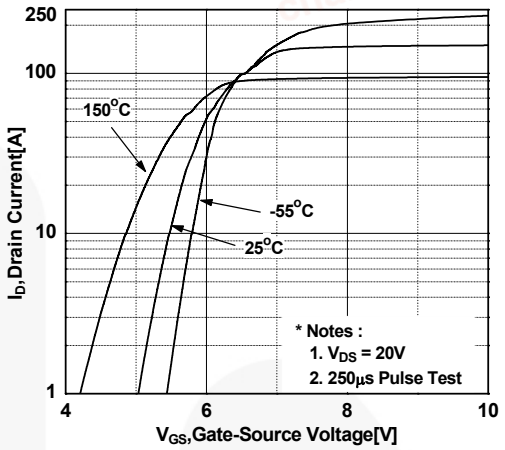

Figure 3. On-Resistance Variation vs. Drain Current and Gate Voltage

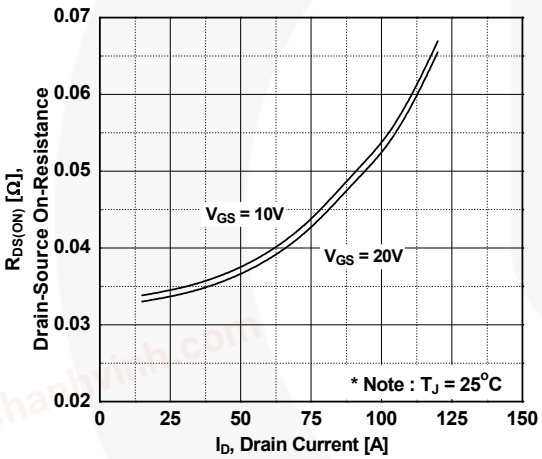

Figure 4. Body Diode Forward Voltage Variation vs. Source Current and Temperatue

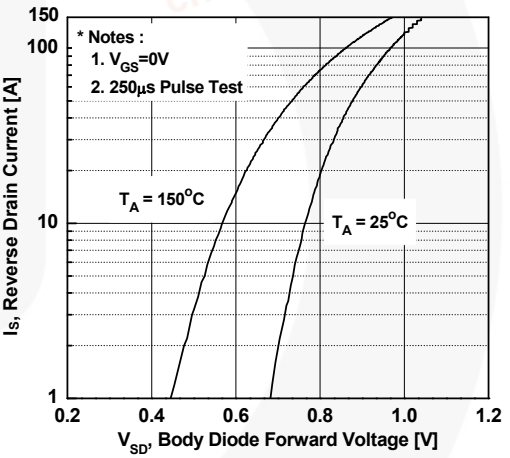

Figure 5. Capacitance Characteristics

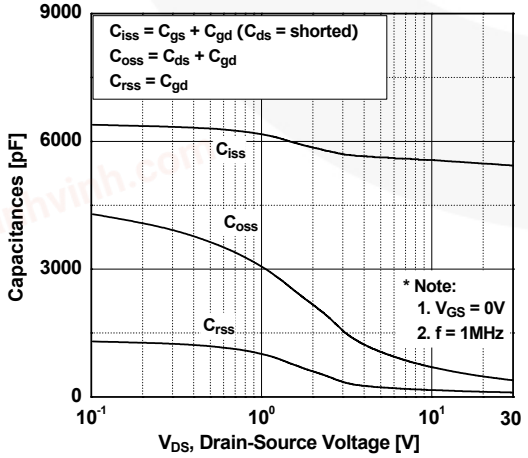

Figure 6. Gate Charge Characteristics

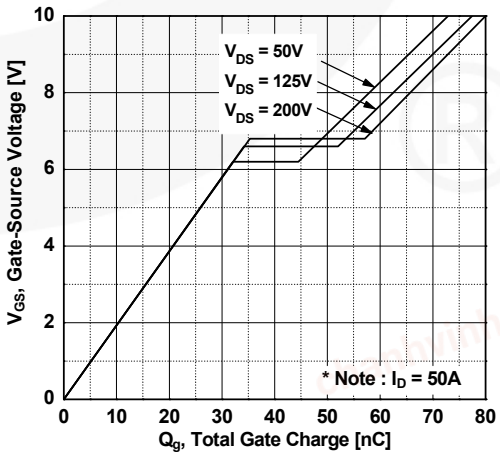

chanhvinh.com

Typical Performance Characteristics (Continued)

Figure 7. Breakdown Voltage Variation vs. Temperature

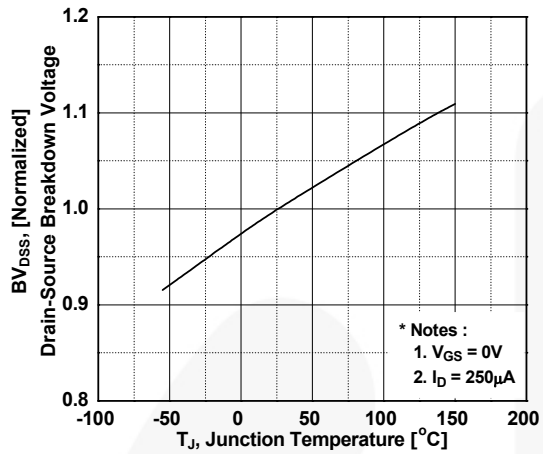

Figure 8. On-Resistance Variation vs. Temperature

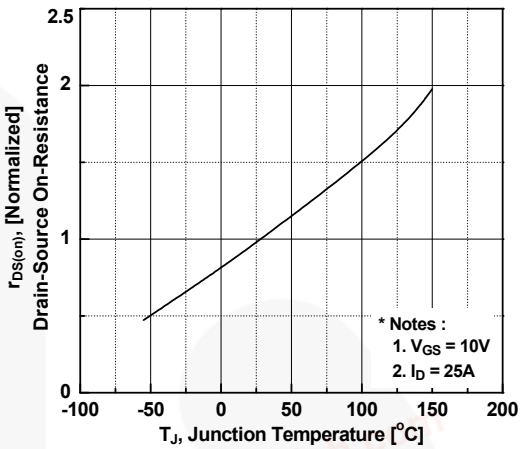

Figure 9. Maximum Safe Operating Area

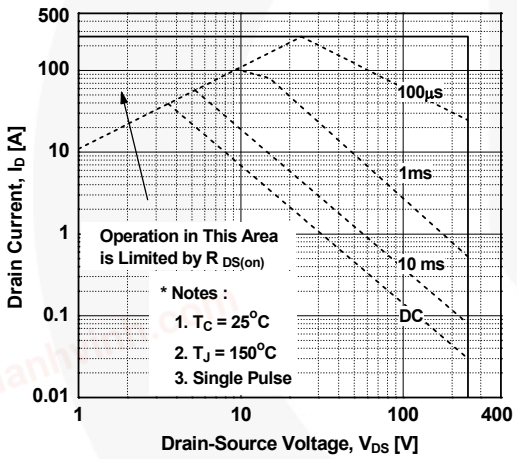

Figure 10. Maximum Drain Current vs. Case Temperature

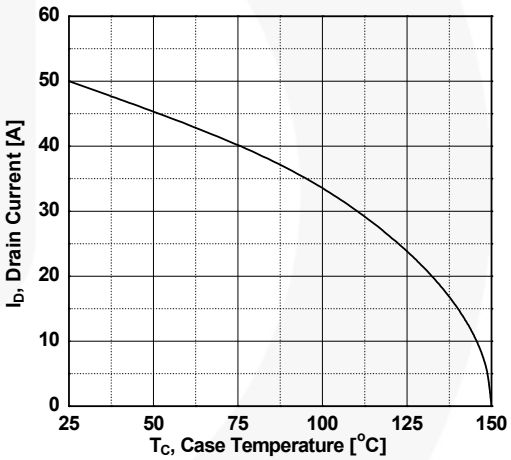

Figure 11. Transient Thermal Response Curve

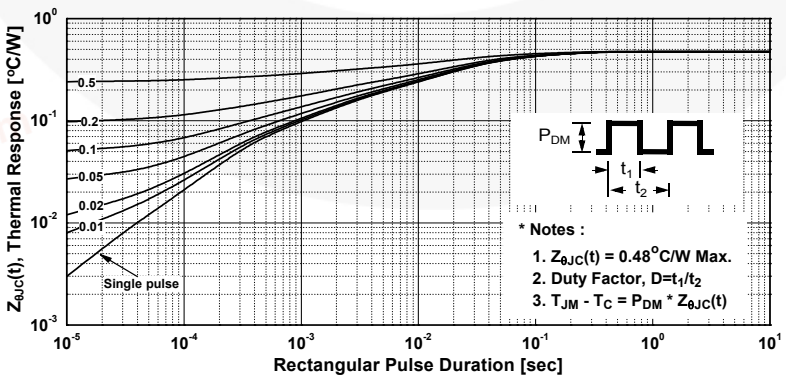

chanhvinh.com

Figure 12. Gate Charge Test Circuit & Waveform

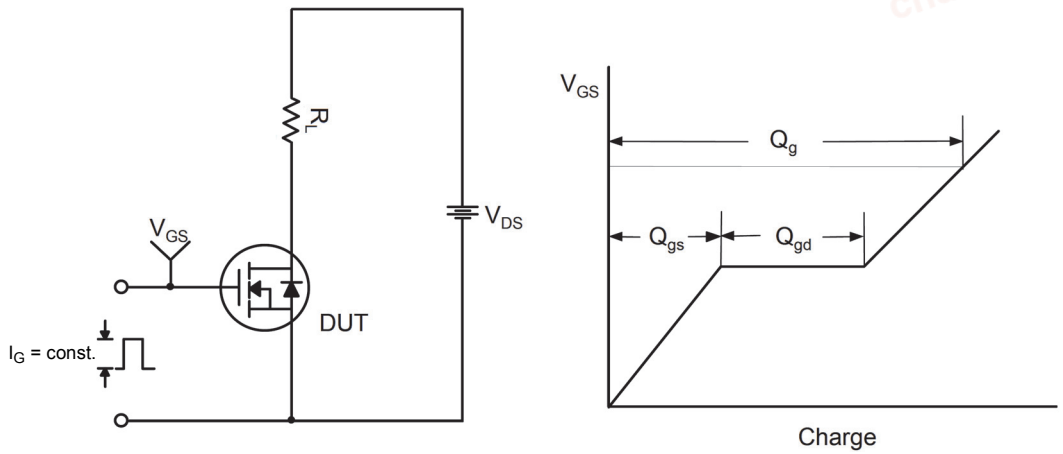

Figure 13. Resistive Switching Test Circuit & Waveforms

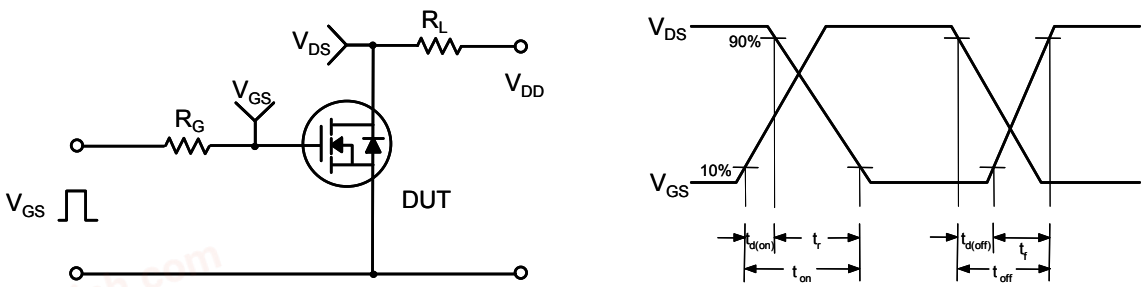

Figure 14. Unclamped Inductive Switching Test Circuit & Waveforms

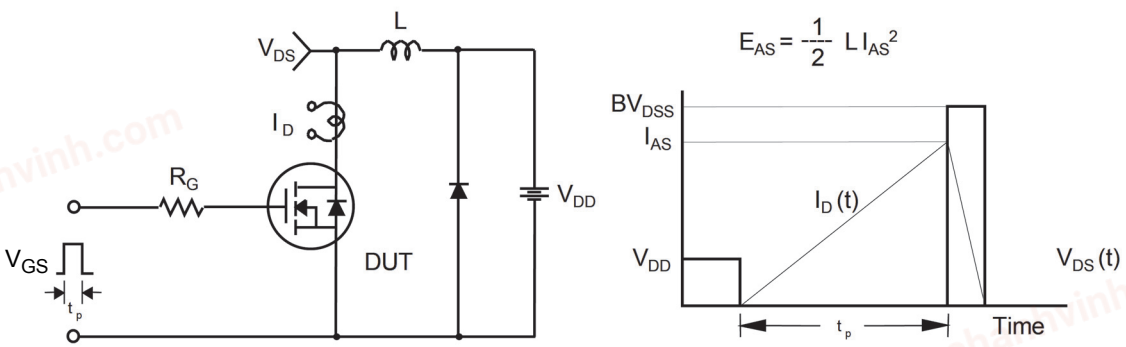

chanhvinh.com

Figure 15. Peak Diode Recovery dv/dt Test Circuit & Waveforms

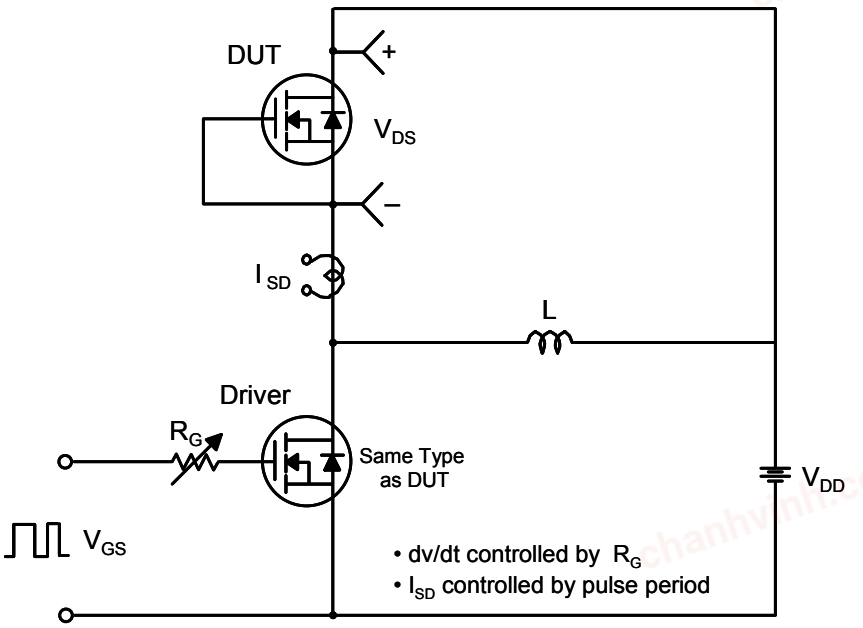

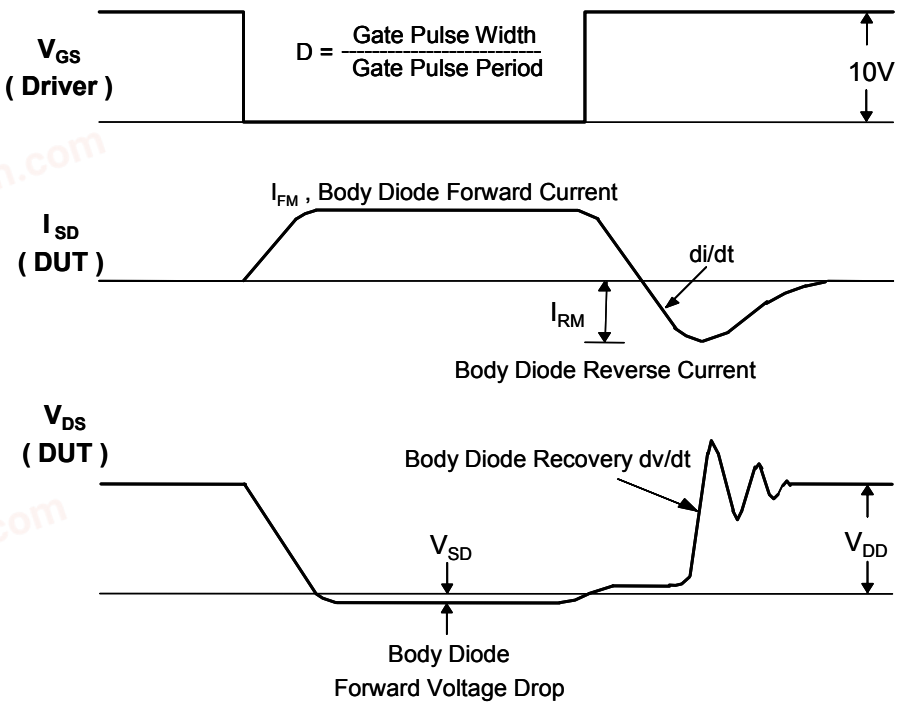

chanhvinh.com

Mechanical Dimensions

TO-263 2L (D^{2}PAK)

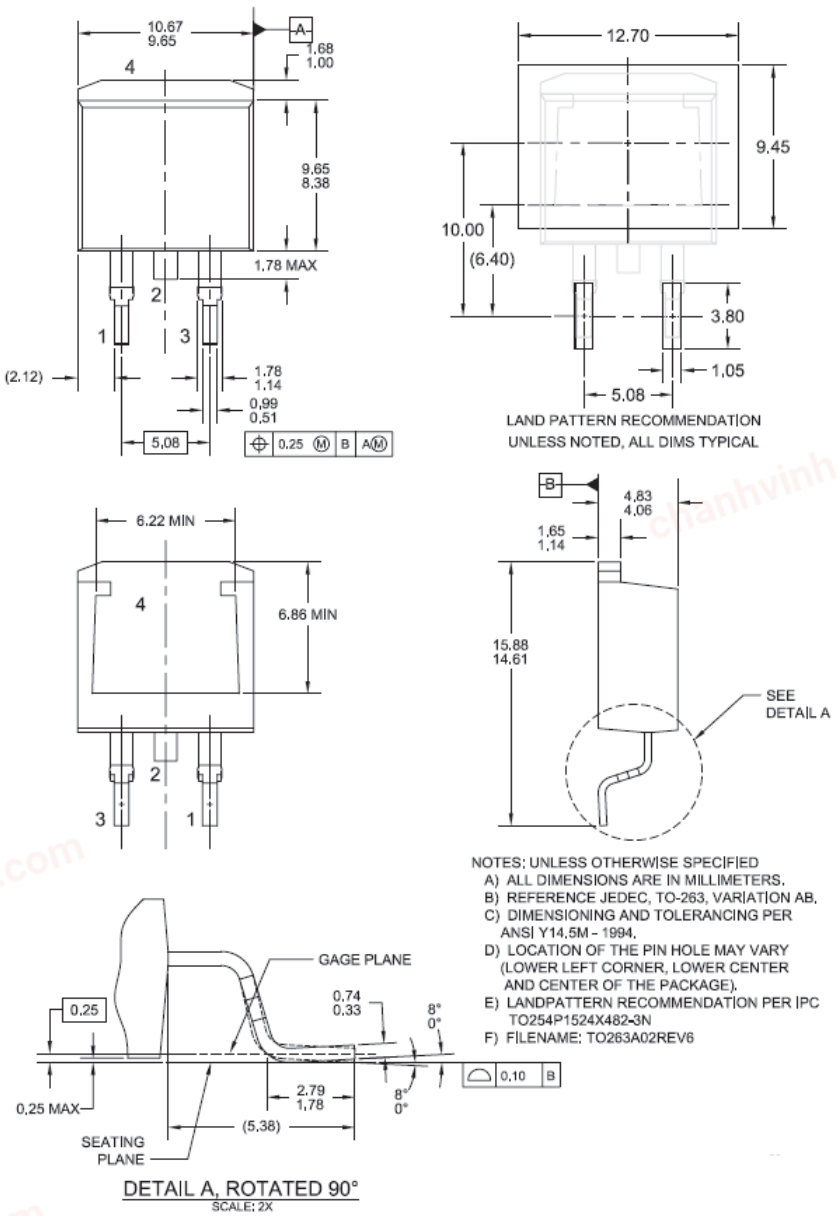

Figure 16. 2LD, TO263, Surface Mount

Package drawings are provided as a service to customers considering Fairchild components. Drawings may change in any manner without notice. Please note the revision and/or date on the drawing and contact a Fairchild Semiconductor representative to verify or obtain the most recent revision. Package specifications do not expand the terms of Fairchild's worldwide terms and conditions, specifically the warranty therein, which covers Fairchild products.

Always visit Fairchild Semiconductor's online packaging area for the most recent package drawings:

http://www.fairchildsemi.com/package/packageDetails.html?id=PN_TT263-002

Dimension in Millimeters

chanhvinh.com

FAIRCHILD SEMICONDUCTOR®

TRADEMARKS

The following includes registered and unregistered trademarks and service marks, owned by Fairchild Semiconductor and/or its global subsidiaries, and is not intended to be an exhaustive list of all such trademarks.

AccuPower™
AX-CAP®*
BitSiC™
Build it Now™
CorePLUS™
CorePOWER™
CROSSVOLT™
CTL™
Current Transfer Logic™
DEUXPEED®
Dual Cool™
EcoSPARK®
EfficentMax™
ESBC™
Fairchild®
Fairchild Semiconductor®
FACT Quiet Series™
FACT®
FAST®
FastvCore™
FETBench™
FPS™
F-PFS™
FRFET®
Global Power Resource℠
GreenBridge™
Green FPS™
Green FPS™ e-Series™
G*max*™
GTO™
IntelliMAX™
ISOPLANAR™
Marking Small Speakers Sound Louder and Better™
MegaBuck™
MICROCOUPLER™
MicroFET™
MicroPak™
MicroPak2™
MillerDrive™
MotionMax™
mWSaver®
OptoHiT™
OPTOLOGIC®
OPTOPLANAR®
PowerTrench®
PowerXS™
Programmable Active Droop™
QFET®
QS™
Quiet Series™
RapidConfigure™
Saving our world, 1mW/W/kW at a time™
SignalWise™
SmartMax™
SMART START™
Solutions for Your Success™
SPM®
STEALTH™
SuperFET®
SuperSOT™-3
SuperSOT™-6
SuperSOT™-8
SupreMOS®
SyncFET™
Sync-Lock™
SYSTEM GENERAL ®*
TinyBoost®
TinyBuck®
TinyCalc™
TinyLogic®
TINYOPTO™
TinyPower™
TinyPWM™
TinyWire™
TranSiC™
TriFault Detect™
TRUECURRENT®*
μSerDes™
SerDes™
UHC®
Ultra FRFET™
UniFET™
VCX™
VisualMax™
VoltagePlus™
XS™

*Trademarks of System General Corporation, used under license by Fairchild Semiconductor.

DISCLAIMER

FAIRCHILD SEMICONDUCTOR RESERVES THE RIGHT TO MAKE CHANGES WITHOUT FURTHER NOTICE TO ANY PRODUCTS HEREIN TO IMPROVE RELIABILITY, FUNCTION, OR DESIGN. FAIRCHILD DOES NOT ASSUME ANY LIABILITY ARISING OUT OF THE APPLICATION OR USE OF ANY PRODUCT OR CIRCUIT DESCRIBED HEREIN; NEITHER DOES IT CONVEY ANY LICENSE UNDER ITS PATENT RIGHTS, NOR THE RIGHTS OF OTHERS. THESE SPECIFICATIONS DO NOT EXPAND THE TERMS OF FAIRCHILD'S WORLDWIDE TERMS AND CONDITIONS, SPECIFICALLY THE WARRANTY THEREIN, WHICH COVERS THESE PRODUCTS.

LIFE SUPPORT POLICY

FAIRCHILD'S PRODUCTS ARE NOT AUTHORIZED FOR USE AS CRITICAL COMPONENTS IN LIFE SUPPORT DEVICES OR SYSTEMS WITHOUT THE EXPRESS WRITTEN APPROVAL OF FAIRCHILD SEMICONDUCTOR CORPORATION.

As used here in:

1. Life support devices or systems are devices or systems which, (a) are intended for surgical implant into the body or (b) support or sustain life, and (c) whose failure to perform when properly used in accordance with instructions for use provided in the labeling, can be reasonably expected to result in a significant injury of the user.
2. A critical component in any component of a life support, device, or system whose failure to perform can be reasonably expected to cause the failure of the life support device or system, or to affect its safety or effectiveness.

ANTI-COUNTERFEITING POLICY

Fairchild Semiconductor Corporation's Anti-Counterfeiting Policy. Fairchild's Anti-Counterfeiting Policy is also stated on our external website, www.Fairchildsemi.com, under Sales Support.

Counterfeiting of semiconductor parts is a growing problem in the industry. All manufactures of semiconductor products are experiencing counterfeiting of their parts. Customers who inadvertently purchase counterfeit parts experience many problems such as loss of brand reputation, substandard performance, failed application, and increased cost of production and manufacturing delays. Fairchild is taking strong measures to protect ourselves and our customers from the proliferation of counterfeit parts. Fairchild strongly encourages customers to purchase Fairchild parts either directly from Fairchild or from Authorized Fairchild Distributors who are listed by country on our web page cited above. Products customers buy either from Fairchild directly or from Authorized Fairchild Distributors are genuine parts, have full traceability, meet Fairchild's quality standards for handing and storage and provide access to Fairchild's full range of up-to-date technical and product information. Fairchild and our Authorized Distributors will stand behind all warranties and will appropriately address and warranty issues that may arise. Fairchild will not provide any warranty coverage or other assistance for parts bought from Unauthorized Sources. Fairchild is committed to combat this global problem and encourage our customers to do their part in stopping this practice by buying direct or from authorized distributors.

PRODUCT STATUS DEFINITIONS

Definition of Terms

Datasheet Identification	Product Status	Definition
Advance Information	Formative / In Design	Datasheet contains the design specifications for product development. Specifications may change in any manner without notice.
Preliminary	First Production	Datasheet contains preliminary data; supplementary data will be published at a later date. Fairchild Semiconductor reserves the right to make changes at any time without notice to improve design.
No Identification Needed	Full Production	Datasheet contains final specifications. Fairchild Semiconductor reserves the right to make changes at any time without notice to improve the design.
Obsolete	Not In Production	Datasheet contains specifications on a product that is discontinued by Fairchild Semiconductor. The datasheet is for reference information only.

Rev. I66