chanhvinh.com

FAIRCHILD SEMICONDUCTOR®

June 2013

EGP20A - EGP20K

2.0 A Glass-Passivated High-Efficiency Rectifiers

Features

- Glass-Passivated Cavity-Free Junction
- High Surge Current Capability
- Low Leakage Current
- Super-Fast Recovery Time for High Efficiency
- Low Forward Voltage, High Current Capability



DO-15 Glass case

COLOR BAND DENOTES CATHODE

Absolute Maximum Ratings(1)

Stresses exceeding the absolute maximum ratings may damage the device. The device may not function or be operable above the recommended operating conditions and stressing the parts to these levels is not recommended. In addition, extended exposure to stresses above the recommended operating conditions may affect device reliability. The absolute maximum ratings are stress ratings only. Values are at T_A = 25°C unless otherwise noted.

Symbol	Parameter	Value	Units
$I_{F(AV)}$	Average Rectified Current .375 inch lead length at T_A = 55°C	2.0	A
I_{FSM}	Peak Forward Surge Current 8.3 ms single half-sine-wave Superimposed on rated load (JEDEC method)	75	A
T_J, T_{STG}	Junction and Storage Temperature Range	-65 to 150	°C

Note:

1. These ratings are limiting values above which the serviceability of any semiconductor device may be impaired.

Thermal Characteristics

P_D	Total Device Dissipation	3.13	W
	Derate above 25°C	25	mW°C
$R_{\theta JA}$	Thermal Resistance, Junction to Ambient	40	°C/W
$R_{\theta JL}$	Thermal Resistance, Junction to Lead	15	°C/W

© 2007 Fairchild Semiconductor Corporation

chanhvinh.com

Electrical Characteristics[2]

T_A = 25°C unless otherwise noted.

Parameter		Device								Units
		20A	20B	20C	20D	20F	20G	20J	20K	
Peak Repetitive Reverse Voltage		50	100	150	200	300	400	600	800	V
Maximum RMS Voltage		35	70	105	140	210	280	420	560	V
DC Reverse Voltage (Rated V_R)		50	100	150	200	300	400	600	800	V
Maximum Reverse Current at Rated V_R	T_A = 25°C	5.0								µA
	T_A = 125°C	100								µA
Maximum Reverse-Recovery Time I_F = 0.5 A, I_R = 1.0 A, I_{rr} = 0.25 A		50						75		ns
Maximum Forward Voltage at 2.0 A		0.95				1.25		1.70		V
Typical Junction Capacitance V_R = 4.0 V, f = 1.0 MHz		70				45				pF

Note:

2. Pulse test: pulse width ≤ 300 µs, duty cycle ≤ 2%.

© 2007 Fairchild Semiconductor Corporation

chanhvinh.com

Typical Performance Characteristics

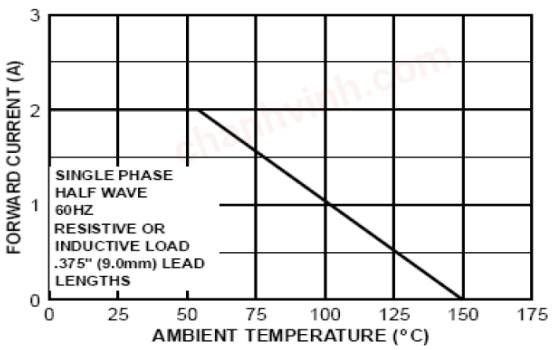

Figure 1. Forward Current Derating Curve

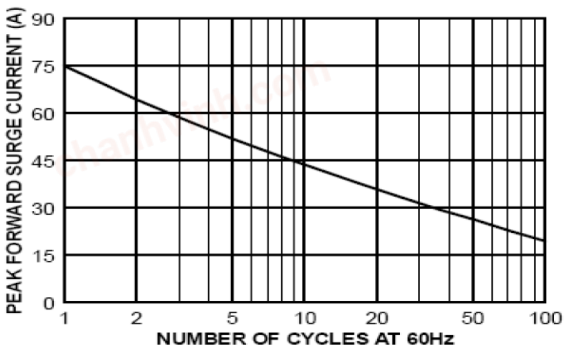

Figure 2. Non-Repetitive Surge Current

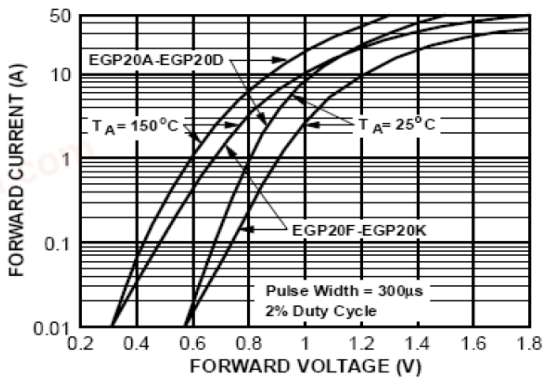

Figure 3. Forward Characteristics

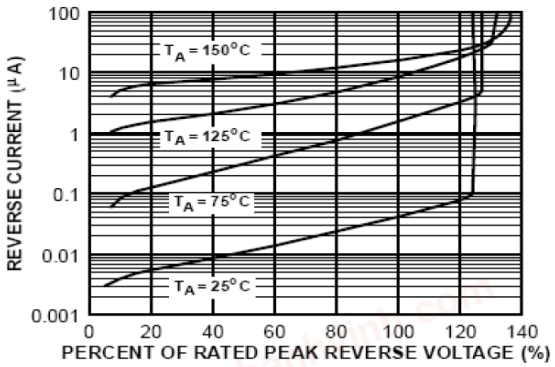

Figure 4. Reserve Characteristics

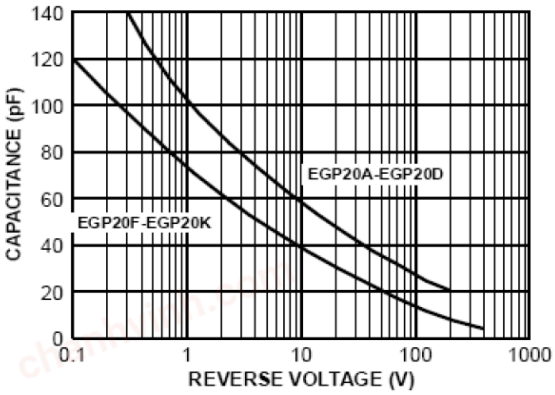

Figure 5. Junction Capacitance

© 2007 Fairchild Semiconductor Corporation

chanhvinh.com

Reverse Recovery Time Characteristic and Test Circuit Diagram

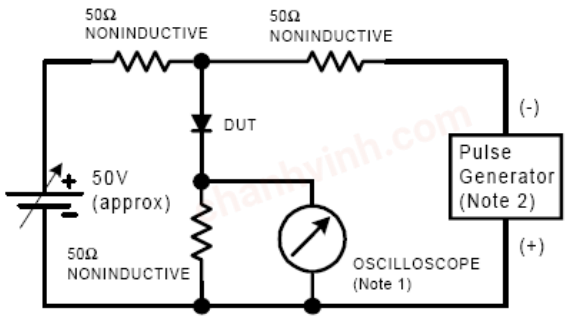

NOTES:

3. Rise time = 7.0 ns max; Input impedance = 1.0 megaohm 22 pf.
4. Rise time = 10 ns max; Source impedance = 50 ohms.

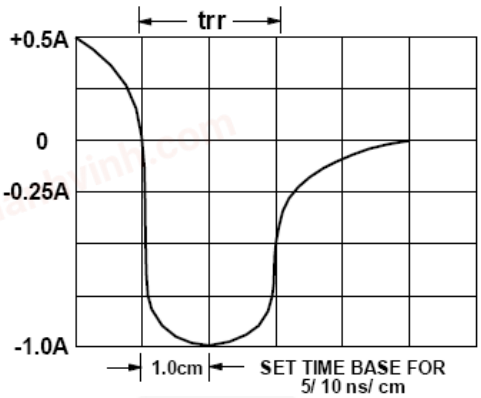

© 2007 Fairchild Semiconductor Corporation

chanhvinh.com

Physical Dimensions

DO-15

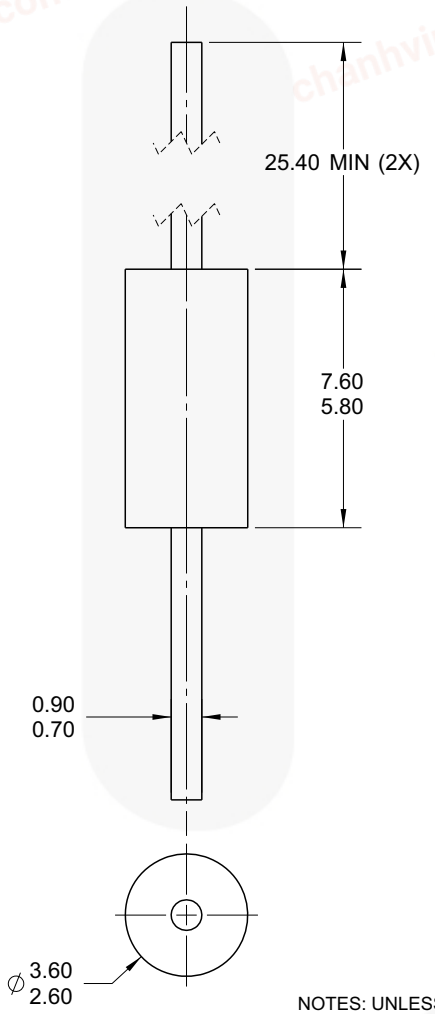

NOTES: UNLESS OTHERWISE SPECIFIED

A) PACKAGE STANDARD REFERENCE:
JEDEC DO-204 VARIATION AC.
B) PLASTIC PACKAGE BODY.
D) ALL DIMENSIONS ARE IN MILLIMETERS.
E) DRAWING FILE NAME: DO15AREV1

Figure 6. AXIAL LEADED, JEDEC DO204, VARIATION (ACTIVE)

Package drawings are provided as a service to customers considering Fairchild components. Drawings may change in any manner without notice. Please note the revision and/or date on the drawing and contact a Fairchild Semiconductor representative to verify or obtain the most recent revision. Package specifications do not expand the terms of Fairchild's worldwide terms and conditions, specifically the warranty therein, which covers Fairchild products.

Always visit Fairchild Semiconductor's online packaging area for the most recent package drawings:
http://www.fairchildsemi.com/packaging/.

For current tape and reel specifications, visit Fairchild Semiconductor's online packaging area:
http://www.fairchildsemi.com/packaging/tr/do15_tr.pdf.

© 2007 Fairchild Semiconductor Corporation

chanhvinh.com

FAIRCHILD SEMICONDUCTOR®

TRADEMARKS

The following includes registered and unregistered trademarks and service marks, owned by Fairchild Semiconductor and/or its global subsidiaries, and is not intended to be an exhaustive list of all such trademarks.

2Cool™
AccuPower™
AX-CAP®*
BitSiC™
Build it Now™
CorePLUS™
CorePOWER™
CROSSVOLT™
CTL™
Current Transfer Logic™
DEUXPEED®
Dual Cool™
EcoSPARK®
EfficientMax™
ESBC™
F®
Fairchild®
Fairchild Semiconductor®
FACT Quiet Series™
FACT®
FAST®
FastvCore™
FETBench™
FPS™
F-PFS™
FRFET®
Global Power Resource SM
GreenBridge™
Green FPS™
Green FPS™ e-Series™
G*max*™
GTO™
IntelliMAX™
ISOPLANAR™
Making Small Speakers Sound Louder and Better™
MegaBuck™
MICROCOUPLER™
MicroFET™
MicroPak™
MicroPak2™
MillerDrive™
MotionMax™
mWSaver™
OptoHiT™
OPTOLOGIC®
OPTOPLANAR®
®
PowerTrench®
PowerXS™
Programmable Active Droop™
QFET®
QS™
Quiet Series™
RapidConfigure™
™
Saving our world, 1mW/W/kW at a time™
SignalWise™
SmartMax™
SMART START™
Solutions for Your Success™
SPM®
STEALTH™
SuperFET®
SuperSOT™-3
SuperSOT™-6
SuperSOT™-8
SupreMOS®
SyncFET™
Sync-Lock™
SYSTEM GENERAL®*
TinyBoost™
TinyBuck™
TinyCalc™
TinyLogic®
TINYOPTO™
TinyPower™
TinyPWM™
TinyWire™
TranSiC™
TriFault Detect™
TRUECURRENT®*
µSerDes™
SerDes™
UHC®
Ultra FRFET™
UniFET™
VCX™
VisualMax™
VoltagePlus™
XS™

* Trademarks of System General Corporation, used under license by Fairchild Semiconductor.

DISCLAIMER

FAIRCHILD SEMICONDUCTOR RESERVES THE RIGHT TO MAKE CHANGES WITHOUT FURTHER NOTICE TO ANY PRODUCTS HEREIN TO IMPROVE RELIABILITY, FUNCTION, OR DESIGN. FAIRCHILD DOES NOT ASSUME ANY LIABILITY ARISING OUT OF THE APPLICATION OR USE OF ANY PRODUCT OR CIRCUIT DESCRIBED HEREIN; NEITHER DOES IT CONVEY ANY LICENSE UNDER ITS PATENT RIGHTS, NOR THE RIGHTS OF OTHERS. THESE SPECIFICATIONS DO NOT EXPAND THE TERMS OF FAIRCHILD'S WORLDWIDE TERMS AND CONDITIONS, SPECIFICALLY THE WARRANTY THEREIN, WHICH COVERS THESE PRODUCTS.

LIFE SUPPORT POLICY

FAIRCHILD'S PRODUCTS ARE NOT AUTHORIZED FOR USE AS CRITICAL COMPONENTS IN LIFE SUPPORT DEVICES OR SYSTEMS WITHOUT THE EXPRESS WRITTEN APPROVAL OF FAIRCHILD SEMICONDUCTOR CORPORATION.

As used herein:

1. Life support devices or systems are devices or systems which, (a) are intended for surgical implant into the body or (b) support or sustain life, and (c) whose failure to perform when properly used in accordance with instructions for use provided in the labeling, can be reasonably expected to result in a significant injury of the user.
2. A critical component in any component of a life support, device, or system whose failure to perform can be reasonably expected to cause the failure of the life support device or system, or to affect its safety or effectiveness.

ANTI-COUNTERFEITING POLICY

Fairchild Semiconductor Corporation's Anti-Counterfeiting Policy. Fairchild's Anti-Counterfeiting Policy is also stated on our external website, www.fairchildsemi.com, under Sales Support.

Counterfeiting of semiconductor parts is a growing problem in the industry. All manufacturers of semiconductor products are experiencing counterfeiting of their parts. Customers who inadvertently purchase counterfeit parts experience many problems such as loss of brand reputation, substandard performance, failed applications, and increased cost of production and manufacturing delays. Fairchild is taking strong measures to protect ourselves and our customers from the proliferation of counterfeit parts. Fairchild strongly encourages customers to purchase Fairchild parts either directly from Fairchild or from Authorized Fairchild Distributors who are listed by country on our web page cited above. Products customers buy either from Fairchild directly or from Authorized Fairchild Distributors are genuine parts, have full traceability, meet Fairchild's quality standards for handling and storage and provide access to Fairchild's full range of up-to-date technical and product information. Fairchild and our Authorized Distributors will stand behind all warranties and will appropriately address any warranty issues that may arise. Fairchild will not provide any warranty coverage or other assistance for parts bought from Unauthorized Sources. Fairchild is committed to combat this global problem and encourage our customers to do their part in stopping this practice by buying direct or from authorized distributors.

PRODUCT STATUS DEFINITIONS

Definition of Terms

Datasheet Identification	Product Status	Definition
Advance Information	Formative / In Design	Datasheet contains the design specifications for product development. Specifications may change in any manner without notice.
Preliminary	First Production	Datasheet contains preliminary data; supplementary data will be published at a later date. Fairchild Semiconductor reserves the right to make changes at any time without notice to improve design.
No Identification Needed	Full Production	Datasheet contains final specifications. Fairchild Semiconductor reserves the right to make changes at any time without notice to improve the design.
Obsolete	Not In Production	Datasheet contains specifications on a product that is discontinued by Fairchild Semiconductor. The datasheet is for reference information only.

Rev. I64