chanhvinh.com

FAIRCHILD SEMICONDUCTOR®

April 2013

FDH / FDLL 300 / A / 333
High Contraction Low Leakage Diode



DO-35
Cathode is denoted with a black band

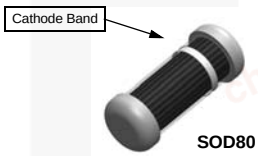

SOD80

LL-34

THE PLACEMENT OF THE EXPANSION GAP HAS NO RELATIONSHIP TO THE LOCATION OF THE CATHODE TERMINAL

LL-34 COLOR BAND MARKING

DEVICE	1ST BAND
FDLL300	WHITE
FDLL300A	WHITE
FDLL333	WHITE

-1st band denotes cathode terminal and has wider width

Absolute Maximum Ratings(1)

Stresses exceeding the absolute maximum ratings may damage the device. The device may not function or be operable above the recommended operating conditions and stressing the parts to these levels is not recommended. In addition, extended exposure to stresses above the recommended operating conditions may affect device reliability. The absolute maximum ratings are stress ratings only. Values are at T_A = 25°C unless otherwise noted.

Symbol	Parameter		Value	Units
W_{IV}	Working Inverse Voltage		125	V
I_O	Average Rectified Forward Current		200	mA
I_F	DC Forward Current		500	mA
i_f	Recurrent Peak Forward Current		600	mA
I_{FSM}	Non-repetitive Peak Forward Surge Current	Pulse Width = 1.0 s	1.0	A
		Pulse Width = 1.0 µs	4.0	A
T_{STG}	Storage Temperature Range		-65 to +200	°C
T_J	Operating Junction Temperature		175	°C

Note:

1. These ratings are limiting values above which the serviceability of the diode may be impaired.
   These ratings are bansed on a maximum junction temperature of 200°C.
   These are steady state limits. The factory should be consulted on applications involving pulsed or low duty cycle operations.

Thermal Characteristics

Values are at T_A = 25°C unless otherwise noted.

Symbol	Parameter	Max.	Units
		FDH / FDLL 400	
P_D	Power Dissipation	500	mW
	Derate above 25°C	3.33	mW/°C
$R_{\theta JA}$	Thermal Resistance, Junction to Ambient	300	°C/W

© 1997 Fairchild Semiconductor Corporation

chanhvinh.com

Electrical Characteristics

Values are at T_A = 25°C unless otherwise noted.

Symbol	Parameter		Test Conditions	Min.	Max.	Units
V_R	Breakdown Voltage		I_R= 100 µA	150		V
V_F	ForwardVoltage	FDH / FDLL 300 / A	I_F= 1.0 mA		680	mV
		FDH / FDLL 300	I_F= 5.0 mA		750	mV
		FDH / FDLL 300A	I_F= 5.0 mA		760	mV
		FDH / FDLL 300 / A	I_F= 10 mA		800	mV
		FDH / FDLL 300	I_F= 50 mA		880	mV
		FDH / FDLL 300A	I_F= 50 mA		890	mV
		FDH / FDLL 300 / A	I_F= 100 mA		920	mV
		FDH / FDLL 300 / A	I_F= 200 mA		1.0	V
		FDH / FDLL 333	I_F= 50 mA	800	890	mV
			I_F= 100 mA	830	940	mV
			I_F= 150 mA	860	970	mV
			I_F= 200 mA	0.87	1.05	V
			I_F= 250 mA	0.88	1.08	V
			I_F= 300 mA	0.9	1.15	V
I_R	Reverse Leakage	FDH / FDLL 300 / A	V_R= 125 V		1.0	**n**A
			V_R= 125 V, T_A= 150°C		3.0	**µ**A
		FDH / FDLL 333	V_R= 125 V		3.0	**n**A
			V_R= 125 V, T_A= 100°C		500	**n**A
C_O	Diode Capacitance		V_R = 0, f = 1.0 MHz		6.0	pF

© 1997 Fairchild Semiconductor Corporation

chanhvinh.com

Physical Dimensions

SOD-80

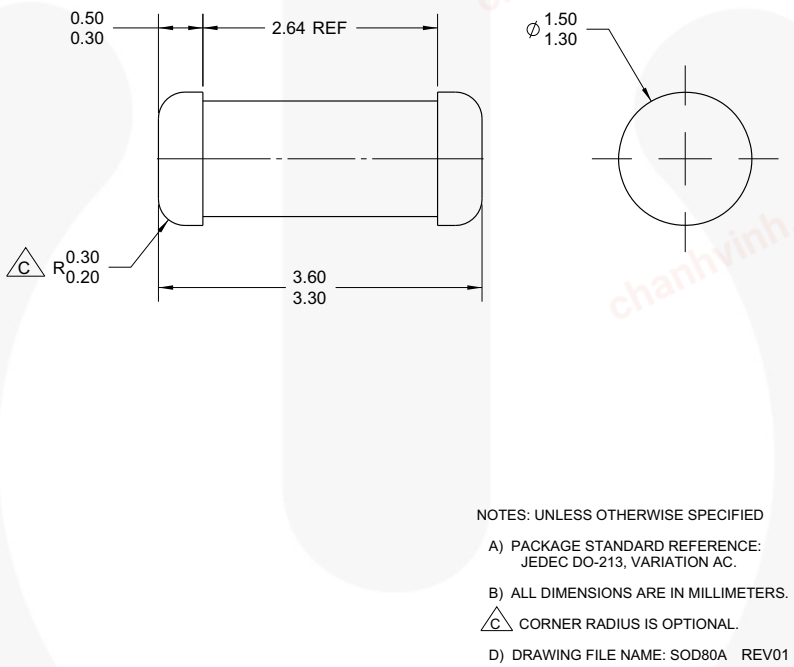

Figure 1. 2-TERMINAL, SOD-80, JEDEC DO-213AC, MINI-MELF

Package drawings are provided as a service to customers considering Fairchild components. Drawings may change in any manner without notice. Please note the revision and/or date on the drawing and contact a Fairchild Semiconductor representative to verify or obtain the most recent revision. Package specifications do not expand the terms of Fairchild's worldwide terms and conditions, specifically the warranty therein, which covers Fairchild products.

Always visit Fairchild Semiconductor's online packaging area for the most recent package drawings:
http://www.fairchildsemi.com/packaging/.

For current tape and reel specifications, visit Fairchild Semiconductor's online packaging area:
http://www.fairchildsemi.com/packaging/tr/SOD80A_tnr.pdf.

© 1997 Fairchild Semiconductor Corporation

chanhvinh.com

Physical Dimensions (Continued)

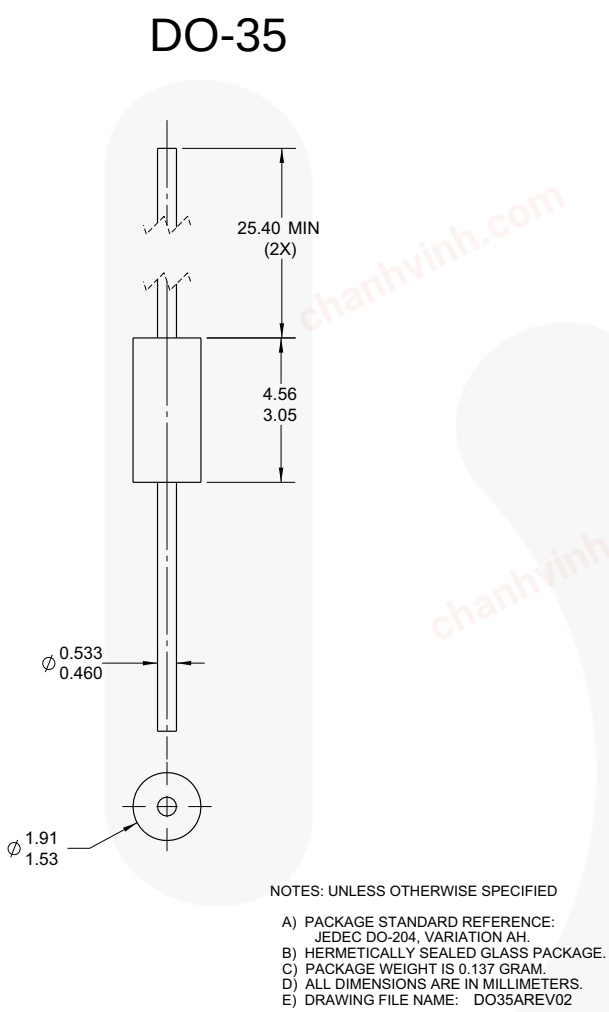

Figure 2. AXIAL LEADED, GLASS, JEDEC DO204, VARIATION AH (ACTIVE)

Package drawings are provided as a service to customers considering Fairchild components. Drawings may change in any manner without notice. Please note the revision and/or date on the drawing and contact a Fairchild Semiconductor representative to verify or obtain the most recent revision. Package specifications do not expand the terms of Fairchild's worldwide terms and conditions, specifically the warranty therein, which covers Fairchild products.

Always visit Fairchild Semiconductor's online packaging area for the most recent package drawings:
http://www.fairchildsemi.com/packaging/.

© 1997 Fairchild Semiconductor Corporation

chanhvinh.com

FAIRCHILD SEMICONDUCTOR®

TRADEMARKS

The following includes registered and unregistered trademarks and service marks, owned by Fairchild Semiconductor and/or its global subsidiaries, and is not intended to be an exhaustive list of all such trademarks.

2Cool™
AccuPower™
AX-CAP®*
BitSiC™
Build it Now™
CorePLUS™
CorePOWER™
CROSSVOLT™
CTL™
Current Transfer Logic™
DEUXPEED®
Dual Cool™
EcoSPARK®
EfficientMax™
ESBC™
Fairchild®
Fairchild Semiconductor®
FACT Quiet Series™
FACT®
FAST®
FastvCore™
FETBench™
FPS™
F-PFS™
FRFET®
Global Power Resource℠
GreenBridge™
Green FPS™
Green FPS™ e-Series™
G*max*™
GTO™
IntelliMAX™
ISOPLANAR™
Making Small Speakers Sound Louder and Better™
MegaBuck™
MICROCOUPLER™
MicroFET™
MicroPak™
MicroPak2™
MillerDrive™
MotionMax™
mWSaver™
OptoHiT™
OPTOLOGIC®
OPTOPLANAR®
PowerTrench®
PowerXS™
Programmable Active Droop™
QFET®
QS™
Quiet Series™
RapidConfigure™
Saving our world, 1mW/W/kW at a time™
SignalWise™
SmartMax™
SMART START™
Solutions for Your Success™
SPM®
STEALTH™
SuperFET®
SuperSOT™-3
SuperSOT™-6
SuperSOT™-8
SupreMOS®
SyncFET™
Sync-Lock™
SYSTEM GENERAL®*
TinyBoost™
TinyBuck™
TinyCalc™
TinyLogic®
TINYOPTO™
TinyPower™
TinyPWM™
TinyWire™
TranSiC™
TriFault Detect™
TRUECURRENT®*
µSerDes™
SerDes™
UHC®
Ultra FRFET™
UniFET™
VCX™
VisualMax™
VoltagePlus™
XS™

* Trademarks of System General Corporation, used under license by Fairchild Semiconductor.

DISCLAIMER

FAIRCHILD SEMICONDUCTOR RESERVES THE RIGHT TO MAKE CHANGES WITHOUT FURTHER NOTICE TO ANY PRODUCTS HEREIN TO IMPROVE RELIABILITY, FUNCTION, OR DESIGN. FAIRCHILD DOES NOT ASSUME ANY LIABILITY ARISING OUT OF THE APPLICATION OR USE OF ANY PRODUCT OR CIRCUIT DESCRIBED HEREIN; NEITHER DOES IT CONVEY ANY LICENSE UNDER ITS PATENT RIGHTS, NOR THE RIGHTS OF OTHERS. THESE SPECIFICATIONS DO NOT EXPAND THE TERMS OF FAIRCHILD'S WORLDWIDE TERMS AND CONDITIONS, SPECIFICALLY THE WARRANTY THEREIN, WHICH COVERS THESE PRODUCTS.

LIFE SUPPORT POLICY

FAIRCHILD'S PRODUCTS ARE NOT AUTHORIZED FOR USE AS CRITICAL COMPONENTS IN LIFE SUPPORT DEVICES OR SYSTEMS WITHOUT THE EXPRESS WRITTEN APPROVAL OF FAIRCHILD SEMICONDUCTOR CORPORATION.

As used herein:

1. Life support devices or systems are devices or systems which, (a) are intended for surgical implant into the body or (b) support or sustain life, and (c) whose failure to perform when properly used in accordance with instructions for use provided in the labeling, can be reasonably expected to result in a significant injury of the user.
2. A critical component in any component of a life support, device, or system whose failure to perform can be reasonably expected to cause the failure of the life support device or system, or to affect its safety or effectiveness.

ANTI-COUNTERFEITING POLICY

Fairchild Semiconductor Corporation's Anti-Counterfeiting Policy. Fairchild's Anti-Counterfeiting Policy is also stated on our external website, www.fairchildsemi.com, under Sales Support.

Counterfeiting of semiconductor parts is a growing problem in the industry. All manufacturers of semiconductor products are experiencing counterfeiting of their parts. Customers who inadvertently purchase counterfeit parts experience many problems such as loss of brand reputation, substandard performance, failed applications, and increased cost of production and manufacturing delays. Fairchild is taking strong measures to protect ourselves and our customers from the proliferation of counterfeit parts. Fairchild strongly encourages customers to purchase Fairchild parts either directly from Fairchild or from Authorized Fairchild Distributors who are listed by country on our web page cited above. Products customers buy either from Fairchild directly or from Authorized Fairchild Distributors are genuine parts, have full traceability, meet Fairchild's quality standards for handling and storage and provide access to Fairchild's full range of up-to-date technical and product information. Fairchild and our Authorized Distributors will stand behind all warranties and will appropriately address any warranty issues that may arise. Fairchild will not provide any warranty coverage or other assistance for parts bought from Unauthorized Sources. Fairchild is committed to combat this global problem and encourage our customers to do their part in stopping this practice by buying direct or from authorized distributors.

PRODUCT STATUS DEFINITIONS

Definition of Terms

Datasheet Identification	Product Status	Definition
Advance Information	Formative / In Design	Datasheet contains the design specifications for product development. Specifications may change in any manner without notice.
Preliminary	First Production	Datasheet contains preliminary data; supplementary data will be published at a later date. Fairchild Semiconductor reserves the right to make changes at any time without notice to improve design.
No Identification Needed	Full Production	Datasheet contains final specifications. Fairchild Semiconductor reserves the right to make changes at any time without notice to improve the design.
Obsolete	Not In Production	Datasheet contains specifications on a product that is discontinued by Fairchild Semiconductor. The datasheet is for reference information only.

Rev. I64

© Fairchild Semiconductor Corporation