chanhvinh.com



Is Now Part of



ON Semiconductor®

To learn more about ON Semiconductor, please visit our website at
www.onsemi.com

Please note: As part of the Fairchild Semiconductor integration, some of the Fairchild orderable part numbers will need to change in order to meet ON Semiconductor's system requirements. Since the ON Semiconductor product management systems do not have the ability to manage part nomenclature that utilizes an underscore (_), the underscore (_) in the Fairchild part numbers will be changed to a dash (-). This document may contain device numbers with an underscore (_). Please check the ON Semiconductor website to verify the updated device numbers. The most current and up-to-date ordering information can be found at www.onsemi.com. Please email any questions regarding the system integration to Fairchild_questions@onsemi.com.

ON Semiconductor and the ON Semiconductor logo are trademarks of Semiconductor Components Industries, LLC dba ON Semiconductor or its subsidiaries in the United States and/or other countries. ON Semiconductor owns the rights to a number of patents, trademarks, copyrights, trade secrets, and other intellectual property. A listing of ON Semiconductor's product/patent coverage may be accessed at www.onsemi.com/site/pdf/Patent-Marking.pdf. ON Semiconductor reserves the right to make changes without further notice to any products herein. ON Semiconductor makes no warranty, representation or guarantee regarding the suitability of its products for any particular purpose, nor does ON Semiconductor assume any liability arising out of the application or use of any product or circuit, and specifically disclaims any and all liability, including without limitation special, consequential or incidental damages. Buyer is responsible for its products and applications using ON Semiconductor products, including compliance with all laws, regulations and safety requirements or standards, regardless of any support or applications information provided by ON Semiconductor. "Typical" parameters which may be provided in ON Semiconductor data sheets and/or specifications can and do vary in different applications and actual performance may vary over time. All operating parameters, including "Typicals" must be validated for each customer application by customer's technical experts. ON Semiconductor does not convey any license under its patent rights nor the rights of others. ON Semiconductor products are not designed, intended, or authorized for use as a critical component in life support systems or any FDA Class 3 medical devices or medical devices with a same or similar classification in a foreign jurisdiction or any devices intended for implantation in the human body. Should Buyer purchase or use ON Semiconductor products for any such unintended or unauthorized application, Buyer shall indemnify and hold ON Semiconductor and its officers, employees, subsidiaries, affiliates, and distributors harmless against all claims, costs, damages, and expenses, and reasonable attorney fees arising out of, directly or indirectly, any claim of personal injury or death associated with such unintended or unauthorized use, even if such claim alleges that ON Semiconductor was negligent regarding the design or manufacture of the part. ON Semiconductor is an Equal Opportunity/Affirmative Action Employer. This literature is subject to all applicable copyright laws and is not for resale in any manner.

chanhvinh.com

June 2015

DF005S1 - DF10S1
Bridge Rectifier

Features

- Maximum Surge Rating: I_{FSM} = 35 A
  I^2t = 5.1 A^2Sec
- Optimized V_F: Typical 0.95 V at 1 A, 25°C
- DF10S Socket Compatible
- Glass Passivated Junctions
- Lead Free Compliant to EU RoHS 2002/95/EU Directives
- Green Molding Compound: IEC61249
- Qualified with IR Reflow and Wave Soldering

Description

With the ever-pressing need to improve power supply efficiency, improve surge rating, improve reliability, and reduce size, the DFxS1 family sets a new standard in performance and cost saving.

The DFxS1 family balances performance against cost. The design offers a moderate surge rating of 35 A required to handle inrush surge and maintain good reliability, with fair price.

The DFxS1 achieves good performance in a SDIP surface mount form factor, reducing board space and volumetric requirements vs. competitive devices.

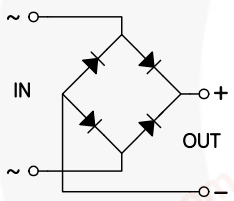

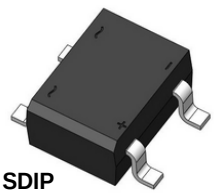

Ordering Information

Part Number	Top Mark	Package	Packing Method
DF005S1	DF005S1	SDIP 4L	Tape and Reel
DF01S1	DF01S1	SDIP 4L	Tape and Reel
DF02S1	DF02S1	SDIP 4L	Tape and Reel
DF04S1	DF04S1	SDIP 4L	Tape and Reel
DF06S1	DF06S1	SDIP 4L	Tape and Reel
DF08S1	DF08S1	SDIP 4L	Tape and Reel
DF10S1	DF10S1	SDIP 4L	Tape and Reel

© 2014 Fairchild Semiconductor Corporation

chanhvinh.com

Absolute Maximum Ratings

Stresses exceeding the absolute maximum ratings may damage the device. The device may not function or be operable above the recommended operating conditions and stressing the parts to these levels is not recommended. In addition, extended exposure to stresses above the recommended operating conditions may affect device reliability. The absolute maximum ratings are stress ratings only. Values are at T_A = 25°C unless otherwise noted.

Symbol	Parameter	Value							Unit
		DF005S1	DF01S1	DF02S1	DF04S1	DF06S1	DF08S1	DF10S1	
V_{RRM}	Maximum Recurrent Peak Reverse Voltage	50	100	200	400	600	800	1000	V
V_{RMS}	Maximum RMS Bridge Input Voltage	35	70	140	280	420	560	700	V
V_{DC}	Maximum DC Blocking Voltage	50	100	200	400	600	800	1000	V
$I_{F(AV)}$	Maximum Average Forward Current T_A = 40°C	1.0							A
I_{FSM}	Peak Forward Surge Current 8.3 ms Single Half-Sine Wave Superimposed on Rated Load(JEDEC Method)	35							A
T_{STG}	Storage Temperature Range	-55 to +150							°C
T_J	Operating Junction Temperature Range	-55 to +150							°C

Thermal Characteristics[1]

Symbol	Parameter	Conditions	Max.	Unit
$R_{\theta JA}$	Thermal Resistance, Junction to Ambient	Single-Die Measurement (Maximum Land Pattern: 13 x 13 mm)	65	°C/W
		Multi-Die Measurement (Maximum Land Pattern: 13 x 13 mm)	50	
		Multi-Die Measurement (Minimum Land Pattern: 1.3 x 1.5 mm)	105	
ψ_{JL}	Thermal Characterization Parameter, Junction to Lead	Single-Die Measurement (Maximum and Minimum Land Pattern)	27	°C/W

Note:

1. The thermal resistances ($R_{\theta JA}$ & ψ_{JL}) are characterized with the device mounted on the following FR4 printed circuit boards, as shown in Figure 1 and Figure 2. PCB size: 76.2 x 114.3 mm.
   Heating effect from adjacent dice is considered and only two dices are powered at the same time.

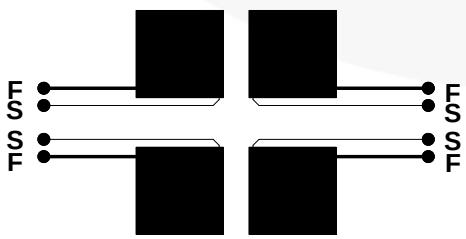

Figure 1. Maximum Pads of 2 oz Copper

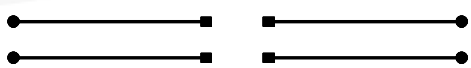

Figure 2. Minimum Pads of 2 oz Copper

© 2014 Fairchild Semiconductor Corporation

chanhvinh.com

Electrical Characteristics

Values are at T_A = 25°C unless otherwise noted.

Symbol	Parameter	Conditions	Min.	Typ.	Max.	Unit
V_F	Forward Voltage Drop per Bridge Element	I_F = 1.0 A			1.1	V
I_R	DC Reverse Current at Rated DC Blocking Voltage	T_J = 25°C			3	µA
		T_J = 125°C			500	
I^2t	Rating for Fusing (t < 8.3 ms)				5.1	A^2S
C_J	Junction Capacitance	V_R = 4.0 V, f = 1.0 MHz		10		pF

© 2014 Fairchild Semiconductor Corporation

chanhvinh.com

Typical Performance Characteristics

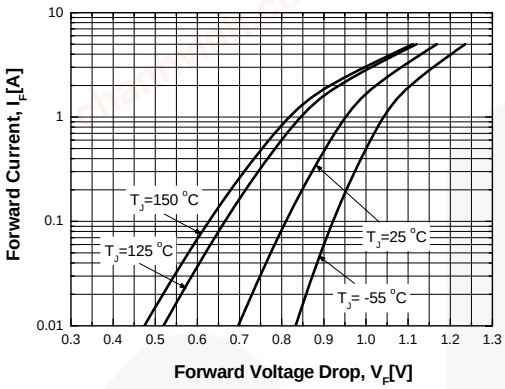

Figure 3. Typical Instantaneous Forward Characteristics

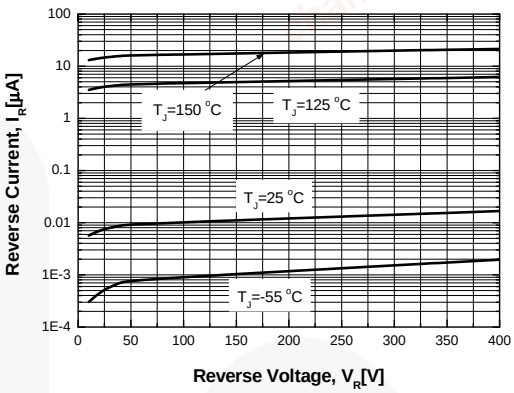

Figure 4. Typical Reverse Characteristics

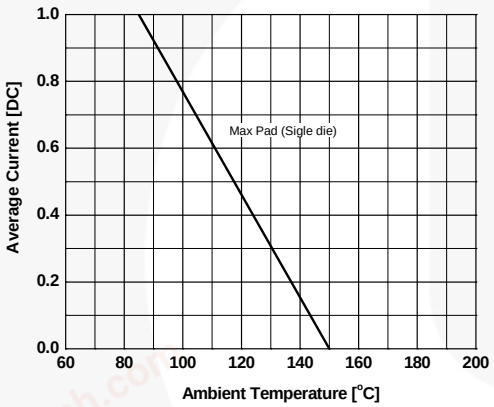

Figure 5. Maximum Average Current vs. Ambient Temperature

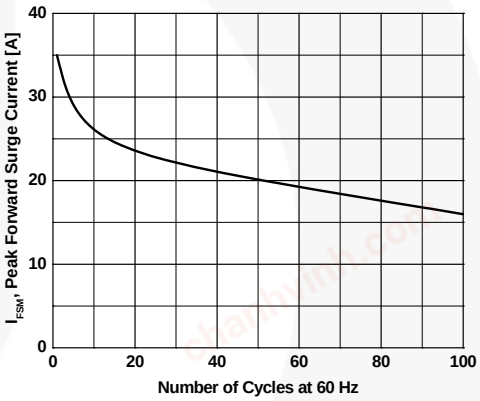

Figure 6. Peak Forward Surge Current vs. Number of Cycles at 60Hz

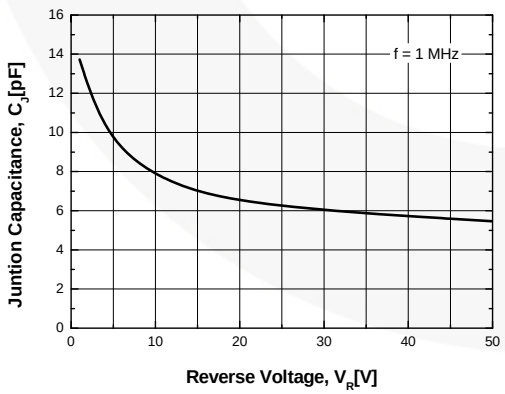

Figure 7. Typical Junction Capacitance

chanhvinh.com

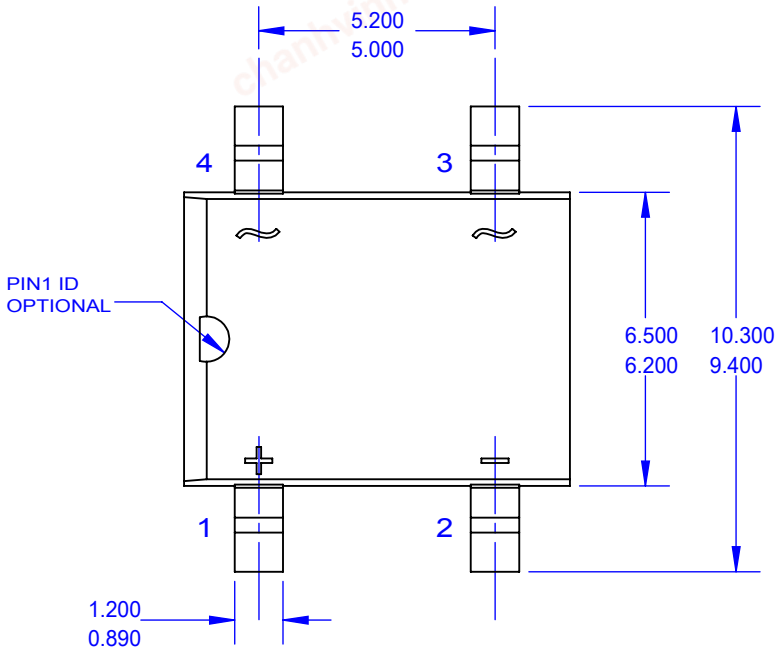

TOP VIEW

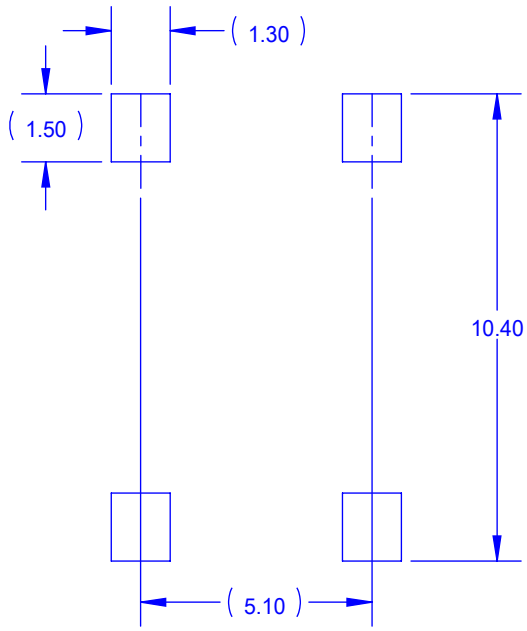

LAND PATTERN RECOMMENDATION

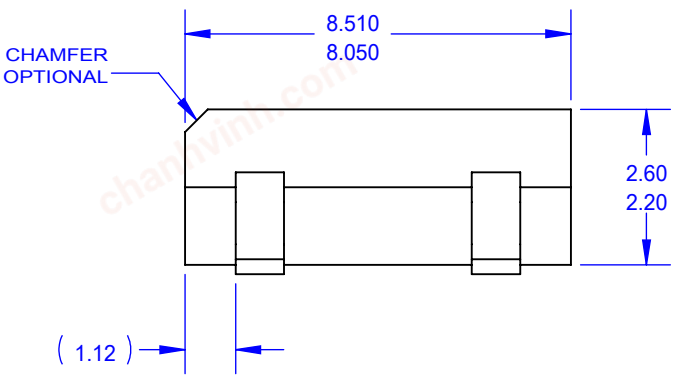

SIDE VIEW

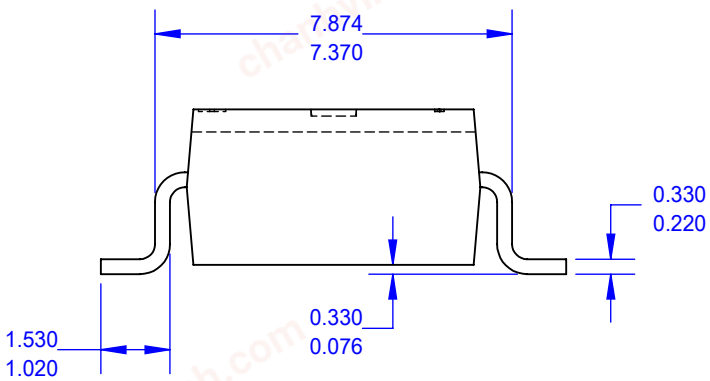

END VIEW

NOTES:

A. THIS PACKAGE DOES NOT CONFORM TO ANY REFERENCE STANDARD.
B. ALL DIMENSIONS ARE IN MILLIMETERS.
C. DIMENSIONS ARE EXCLUSIVE OF BURRS, MOLD FLASH AND TIE BAR PROTRUSIONS.
G. DRAWING FILE NAME: MKT-SDIP04AREV5.

FAIRCHILD™

chanhvinh.com

ON Semiconductor and ON are trademarks of Semiconductor Components Industries, LLC dba ON Semiconductor or its subsidiaries in the United States and/or other countries. ON Semiconductor owns the rights to a number of patents, trademarks, copyrights, trade secrets, and other intellectual property. A listing of ON Semiconductor's product/patent coverage may be accessed at www.onsemi.com/site/pdf/Patent−Marking.pdf. ON Semiconductor reserves the right to make changes without further notice to any products herein. ON Semiconductor makes no warranty, representation or guarantee regarding the suitability of its products for any particular purpose, nor does ON Semiconductor assume any liability arising out of the application or use of any product or circuit, and specifically disclaims any and all liability, including without limitation special, consequential or incidental damages. Buyer is responsible for its products and applications using ON Semiconductor products, including compliance with all laws, regulations and safety requirements or standards, regardless of any support or applications information provided by ON Semiconductor. "Typical" parameters which may be provided in ON Semiconductor data sheets and/or specifications can and do vary in different applications and actual performance may vary over time. All operating parameters, including "Typicals" must be validated for each customer application by customer's technical experts. ON Semiconductor does not convey any license under its patent rights nor the rights of others. ON Semiconductor products are not designed, intended, or authorized for use as a critical component in life support systems or any FDA Class 3 medical devices or medical devices with a same or similar classification in a foreign jurisdiction or any devices intended for implantation in the human body. Should Buyer purchase or use ON Semiconductor products for any such unintended or unauthorized application, Buyer shall indemnify and hold ON Semiconductor and its officers, employees, subsidiaries, affiliates, and distributors harmless against all claims, costs, damages, and expenses, and reasonable attorney fees arising out of, directly or indirectly, any claim of personal injury or death associated with such unintended or unauthorized use, even if such claim alleges that ON Semiconductor was negligent regarding the design or manufacture of the part. ON Semiconductor is an Equal Opportunity/Affirmative Action Employer. This literature is subject to all applicable copyright laws and is not for resale in any manner.

PUBLICATION ORDERING INFORMATION

LITERATURE FULFILLMENT:
Literature Distribution Center for ON Semiconductor
19521 E. 32nd Pkwy, Aurora, Colorado 80011 USA
Phone: 303−675−2175 or 800−344−3860 Toll Free USA/Canada
Fax: 303−675−2176 or 800−344−3867 Toll Free USA/Canada
Email: orderlit@onsemi.com

N. American Technical Support: 800−282−9855 Toll Free USA/Canada
Europe, Middle East and Africa Technical Support:
Phone: 421 33 790 2910
Japan Customer Focus Center
Phone: 81−3−5817−1050

ON Semiconductor Website: **www.onsemi.com**

Order Literature: http://www.onsemi.com/orderlit

For additional information, please contact your local Sales Representative

© Semiconductor Components Industries, LLC