chanhvinh.com



Is Now Part of



ON Semiconductor®

To learn more about ON Semiconductor, please visit our website at
www.onsemi.com

Please note: As part of the Fairchild Semiconductor integration, some of the Fairchild orderable part numbers will need to change in order to meet ON Semiconductor's system requirements. Since the ON Semiconductor product management systems do not have the ability to manage part nomenclature that utilizes an underscore (_), the underscore (_) in the Fairchild part numbers will be changed to a dash (-). This document may contain device numbers with an underscore (_). Please check the ON Semiconductor website to verify the updated device numbers. The most current and up-to-date ordering information can be found at www.onsemi.com. Please email any questions regarding the system integration to Fairchild_questions@onsemi.com.

ON Semiconductor and the ON Semiconductor logo are trademarks of Semiconductor Components Industries, LLC dba ON Semiconductor or its subsidiaries in the United States and/or other countries. ON Semiconductor owns the rights to a number of patents, trademarks, copyrights, trade secrets, and other intellectual property. A listing of ON Semiconductor's product/patent coverage may be accessed at www.onsemi.com/site/pdf/Patent-Marking.pdf. ON Semiconductor reserves the right to make changes without further notice to any products herein. ON Semiconductor makes no warranty, representation or guarantee regarding the suitability of its products for any particular purpose, nor does ON Semiconductor assume any liability arising out of the application or use of any product or circuit, and specifically disclaims any and all liability, including without limitation special, consequential or incidental damages. Buyer is responsible for its products and applications using ON Semiconductor products, including compliance with all laws, regulations and safety requirements or standards, regardless of any support or applications information provided by ON Semiconductor. "Typical" parameters which may be provided in ON Semiconductor data sheets and/or specifications can and do vary in different applications and actual performance may vary over time. All operating parameters, including "Typicals" must be validated for each customer application by customer's technical experts. ON Semiconductor does not convey any license under its patent rights nor the rights of others. ON Semiconductor products are not designed, intended, or authorized for use as a critical component in life support systems or any FDA Class 3 medical devices or medical devices with a same or similar classification in a foreign jurisdiction or any devices intended for implantation in the human body. Should Buyer purchase or use ON Semiconductor products for any such unintended or unauthorized application, Buyer shall indemnify and hold ON Semiconductor and its officers, employees, subsidiaries, affiliates, and distributors harmless against all claims, costs, damages, and expenses, and reasonable attorney fees arising out of, directly or indirectly, any claim of personal injury or death associated with such unintended or unauthorized use, even if such claim alleges that ON Semiconductor was negligent regarding the design or manufacture of the part. ON Semiconductor is an Equal Opportunity/Affirmative Action Employer. This literature is subject to all applicable copyright laws and is not for resale in any manner.

chanhvinh.com

January 2016

Single-Channel: 6N137M, HCPL2601M, HCPL2611M
Dual-Channel: HCPL2630M, HCPL2631M
8-Pin DIP High-Speed 10 MBit/s Logic Gate Optocouplers

Features

- Very High Speed – 10 MBit/s
- Superior CMR – 10 kV/µs
- Fan-out of 8 Over -40°C to +85°C
- Logic Gate Output
- Strobable Output
- Wired OR-open Collector
- Safety and Regulatory Approvals
  - UL1577, 5,000 VAC_{RMS} for 1 Minute
  - DIN EN/IEC60747-5-5

Applications

- Ground Loop Elimination
- LSTTL to TTL, LSTTL or 5 V CMOS
- Line Receiver, Data Transmission
- Data Multiplexing
- Switching Power Supplies
- Pulse Transformer Replacement
- Computer-peripheral Interface

Description

The 6N137M, HCPL2601M, HCPL2611M single-channel and HCPL2630M, HCPL2631M dual-channel optocouplers consist of a 850 nm AlGaAS LED, optically coupled to a very high speed integrated photo-detector logic gate with a strobable output. This output features an open collector, thereby permitting wired OR outputs. The switching parameters are guaranteed over the temperature range of -40°C to +85°C. A maximum input signal of 5 mA will provide a minimum output sink current of 13 mA (fan out of 8).

An internal noise shield provides superior common mode rejection of typically 10 kV/µs. The HCPL2601M and HCPL2631M has a minimum CMR of 5 kV/µs. The HCPL2611M has a minimum CMR of 10 kV/µs.

Schematics

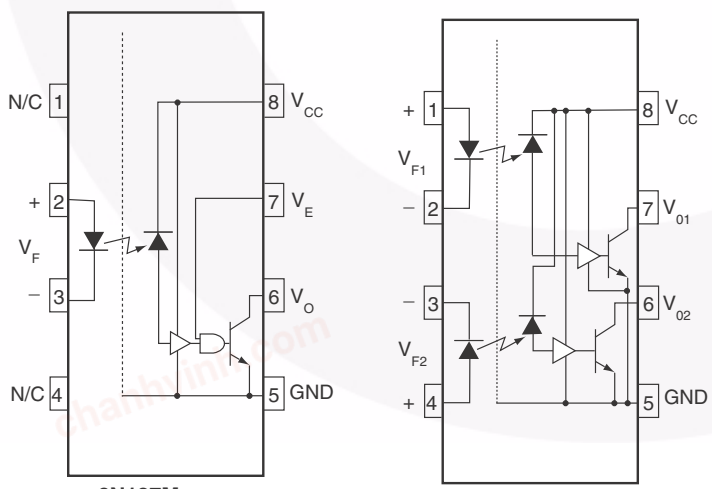

6N137M, HCPL2601M, HCPL2611M | **HCPL2630M, HCPL2631M**

A 0.1µF bypass capacitor must be connected between pins 8 and 5(1).

Figure 1. Schematics

Package Outlines

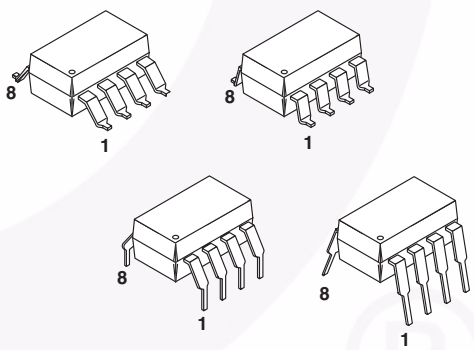

Figure 2. Package Options

Truth Table (Positive Logic)

Input	Enable	Output
H	H	L
L	H	H
H	L	H
L	L	H
H	NC	L
L	NC	H

©2009 Fairchild Semiconductor Corporation

Single-Channel: 6N137M, HCPL2601M, HCPL2611M
Dual-Channel: HCPL2630M, HCPL2631M — 8-Pin DIP High-Speed 10 MBit/s Logic Gate Optocouplers

chanhvinh.com

Safety and Insulation Ratings

As per DIN EN/IEC 60747-5-5, this optocoupler is suitable for “safe electrical insulation” only within the safety limit data. Compliance with the safety ratings shall be ensured by means of protective circuits.

Parameter		Characteristics
Installation Classifications per DIN VDE 0110/1.89 Table 1, For Rated Mains Voltage	< 150 V_{RMS}	I–IV
	< 300 V_{RMS}	I–IV
	< 450 V_{RMS}	I–III
	< 600 V_{RMS}	I–III
Climatic Classification		40/100/21
Pollution Degree (DIN VDE 0110/1.89)		2
Comparative Tracking Index		175

Symbol	Parameter	Value	Unit
V_{PR}	Input-to-Output Test Voltage, Method A, V_{IORM} x 1.6 = V_{PR}, Type and Sample Test with t_m = 10 s, Partial Discharge < 5 pC	1,335	V_{peak}
	Input-to-Output Test Voltage, Method B, V_{IORM} x 1.875 = V_{PR}, 100% Production Test with t_m = 1 s, Partial Discharge < 5 pC	1,669	V_{peak}
V_{IORM}	Maximum Working Insulation Voltage	890	V_{peak}
V_{IOTM}	Highest Allowable Over-Voltage	6,000	V_{peak}
	External Creepage	≥ 8.0	mm
	External Clearance	≥ 7.4	mm
	External Clearance (for Option TV, 0.4" Lead Spacing)	≥ 10.16	mm
DTI	Distance Through Insulation (Insulation Thickness)	≥ 0.5	mm
T_S	Case Temperature[2]	150	°C
$I_{S,INPUT}$	Input Current[2]	200	mA
$P_{S,OUTPUT}$	Output Power (Duty Factor ≤ 2.7%)[2]	300	mW
R_{IO}	Insulation Resistance at T_S, V_{IO} = 500 V[2]	> 10^9	Ω

Notes:

1. The V_{CC} supply to each optoisolator must be bypassed by a 0.1 µF capacitor or larger. This can be either a ceramic or solid tantalum capacitor with good high frequency characteristic and should be connected as close as possible to the package V_{CC} and GND pins of each device.
2. Safety limit value - maximum values allowed in the event of a failure.

©2009 Fairchild Semiconductor Corporation

chanhvinh.com

Absolute Maximum Ratings

Stresses exceeding the absolute maximum ratings may damage the device. The device may not function or be operable above the recommended operating conditions and stressing the parts to these levels is not recommended. In addition, extended exposure to stresses above the recommended operating conditions may affect device reliability. The absolute maximum ratings are stress ratings only. T_A = 25°C unless otherwise specified.

Symbol	Parameter	Value	Unit
T_{STG}	Storage Temperature	-40 to +125	°C
T_{OPR}	Operating Temperature	-40 to +100	°C
T_J	Junction Temperature	-40 to +125	°C
T_{SOL}	Lead Solder Temperature	260 for 10 sec	°C

Symbol	Parameter	Device	Value	Unit
EMITTER				
I_F (avg)	DC/Average Forward Input Current Per Channel	Single Channel	50	mA
		Dual Channel	30	
V_E	Enable Input Voltage Not to Exceed V_{CC} by more than 500 mV	Single Channel	5.5	V
V_R	Reverse Input Voltage Per Channel	All	5.0	V
P_I	Input Power Dissipation Per Channel	Single Channel	100	mW
		Dual Channel	45	
DETECTOR				
V_{CC}	Supply Voltage	All	-0.5 to 7.0	V
I_O (avg)	Average Output Current Per Channel	All	25	mA
I_O (pk)	Peak Output Current Per Channel	All	50	mA
V_O	Output Voltage Per Channel	All	-0.5 to 7.0	V
P_O	Output Power Dissipation Per Channel	Single Channel	85	mW
		Dual Channel	60	

Recommended Operating Conditions

The Recommended Operating Conditions table defines the conditions for actual device operation. Recommended operating conditions are specified to ensure optimal performance to the datasheet specifications. Fairchild does not recommend exceeding them or designing to absolute maximum ratings.

Symbol	Parameter	Min.	Max.	Unit
V_{CC}	Supply Voltage	4.5	5.5	V
I_{FL}	Input Current, Low Level	0	250	µA
I_{FH}	Input Current, High Level	6.3[3]	20.0	mA
V_{EL}	Enable Voltage, Low Level	0	0.8	V
V_{EH}	Enable Voltage, High Level	2.0	V_{CC}	V
T_A	Ambient Operating Temperature	-40	+85	°C
N	Fan Out (TTL load)		8	

Note:

3. 6.3 mA is a guard banded value which allows for at least 20% CTR degradation. Initial input current threshold value is 5.0 mA or less.

©2009 Fairchild Semiconductor Corporation

chanhvinh.com

Electrical Characteristics

Individual Component Characteristics (V_{CC} = 5.5 V, T_A = 0°C to 70°C unless otherwise specified)

Symbol	Parameter	Device	Test Conditions	Min.	Typ.	Max.	Unit
EMITTER							
V_F	Input Forward Voltage	All	I_F = 10 mA, T_A = 25°C		1.45	1.70	V
			I_F = 10 mA			1.80	
B_{VR}	Input Reverse Breakdown Voltage	All	I_R = 10 µA	5.0			V
C_{IN}	Input Capacitance	All	V_F = 0, f = 1 MHz		60		pF
$\Delta V_F / \Delta T_A$	Temperature Coefficient of Forward Voltage	All	I_F = 10 mA		-1.4		mV/°C
DETECTOR							
I_{CCL}	Logic Low Supply Current	Single Channel	I_F = 10 mA, V_O = Open, V_E = 0.5 V		8	13	mA
		Dual Channel	I_{F1} = I_{F2} = 10 mA, V_O = Open		14	21	
I_{CCH}	Logic High Supply Current	Single Channel	I_F = 0 mA, V_O = Open, V_E = 0.5 V		6	10	mA
		Dual Channel	I_F = 0 mA, V_O = Open,		10	15	
I_{EL}	Low Level Enable Current	Single Channel	V_E = 0.5 V		-0.7	-1.6	mA
I_{EH}	High Level Enable Current	Single Channel	V_E = 2.0 V		-0.5	-1.6	mA
V_{EL}	Low Level Enable Voltage	Single Channel	I_F = 10 mA[4]			0.8	V
V_{EH}	High Level Enable Voltage	Single Channel	I_F = 10 mA	2.0			V

Note:

4. Enable Input – No pull up resistor required as the device has an internal pull up resistor.

Transfer Characteristics (V_{CC} = 5.5 V, T_A = -40°C to +85°C unless otherwise specified)

Symbol	Parameter	Device	Test Conditions	Min.	Typ.	Max.	Unit
I_{FT}	Input Threshold Current	All	V_O = 0.6 V, V_E = 2.0 V, I_{OL} = 13 mA		3	5	mA
I_{OH}	HIGH Level Output Current	All	V_O = 5.5 V, I_F = 250 µA, V_E = 2.0 V			100	µA
V_{OL}	LOW Level Output Voltage	All	I_F = 5 mA, V_E = 2.0 V, I_{OL} = 13 mA		0.4	0.6	V

©2009 Fairchild Semiconductor Corporation

chanhvinh.com

Electrical Characteristics (Continued)

Switching Characteristics (V_{CC} = 5 V, I_F = 7.5 mA, T_A = -40°C to +85°C unless otherwise specified)

Symbol	Parameter	Device	Test Conditions	Min.	Typ.	Max.	Unit
t_{PHL}	Propagation Delay Time to Logic LOW	All	R_L = 350 Ω, C_L = 15 pF, T_A = 25°C[5] (Fig. 14)	25	40	75	ns
			R_L = 350 Ω, C_L = 15 pF[5] (Fig. 14)			100	
t_{PLH}	Propagation Delay Time to Logic HIGH	All	R_L = 350 Ω, C_L = 15 pF, T_A = 25°C[6] (Fig. 14)	20	40	75	ns
			R_L = 350 Ω, C_L = 15 pF[6] (Fig. 14)			100	
$\lvert t_{PHL} - t_{PLH} \rvert$	Pulse Width Distortion	All	R_L = 350 Ω, C_L = 15 pF (Fig. 14)		1	35	ns
t_R	Output Rise Time (10% to 90%)	All	R_L = 350 Ω, C_L = 15 pF[7] (Fig. 14)		30		ns
t_F	Output Fall Time (90% to 10%)	All	R_L = 350 Ω, C_L = 15 pF[8] (Fig. 14)		10		ns
t_{EHL}	Enable Propagation Delay Time to Output LOW Level	Single Channel	V_{EH} = 3.5 V, R_L = 350 Ω, C_L = 15 pF[9] (Fig. 15)		15		ns
t_{ELH}	Enable Propagation Delay Time to Output HIGH Level	Single Channel	V_{EH} = 3.5 V, R_L = 350 Ω, C_L = 15 pF[10] (Fig. 15)		15		ns
$\lvert CM_H \rvert$	Common Mode Transient Immunity at Logic High	6N137M, HCPL2630M	I_F = 0 mA, V_{CM} = 50 V_{PEAK}, R_L = 350 Ω, T_A = 25°C[11] (Fig. 16)		10,000		V/µs
		HCPL2601M, HCPL2631M		5000	10,000		
		HCPL2611M	I_F = 0 mA, V_{CM} = 400 V_{PEAK}, R_L = 350 Ω, T_A = 25°C[11] (Fig. 16)	10,000	15,000		
$\lvert CM_L \rvert$	Common Mode Transient Immunity at Logic Low	6N137M, HCPL2630M	V_{CM} = 50 V_{PEAK}, R_L = 350 Ω, T_A = 25°C[11] (Fig. 16)		10,000		V/µs
		HCPL2601M, HCPL2631M		5000	10,000		
		HCPL2611M	V_{CM} = 400 V_{PEAK}, R_L = 350 Ω, T_A = 25°C[11] (Fig. 16)	10,000	15,000		

Notes:

5. t_{PHL} – Propagation delay is measured from the 3.75 mA level on the LOW to HIGH transition of the input current pulse to the 1.5 V level on the HIGH to LOW transition of the output voltage pulse.
6. t_{PLH} – Propagation delay is measured from the 3.75 mA level on the HIGH to LOW transition of the input current pulse to the 1.5 V level on the LOW to HIGH transition of the output voltage pulse.
7. t_R – Rise time is measured from the 90% to the 10% levels on the LOW to HIGH transition of the output pulse.
8. t_F – Fall time is measured from the 10% to the 90% levels on the HIGH to LOW transition of the output pulse.
9. t_{EHL} – Enable input propagation delay is measured from the 1.5 V level on the LOW to HIGH transition of the input voltage pulse to the 1.5 V level on the HIGH to LOW transition of the output voltage pulse.
10. t_{ELH} – Enable input propagation delay is measured from the 1.5 V level on the HIGH to LOW transition of the input voltage pulse to the 1.5 V level on the LOW to HIGH transition of the output voltage pulse.
11. Common mode transient immunity in logic high level is the maximum tolerable (positive) dV_{cm}/dt on the leading edge of the common mode pulse signal, V_{CM}, to assure that the output will remain in a logic high state (i.e., V_O > 2.0 V). Common mode transient immunity in logic low level is the maximum tolerable (negative) dV_{cm}/dt on the trailing edge of the common mode pulse signal, V_{CM}, to assure that the output will remain in a logic low state (i.e., V_O < 0.8 V).

chanhvinh.com

Electrical Characteristics (Continued)

Isolation Characteristics (T_A =25°C unless otherwise specified.)

Symbol	Parameter	Device	Test Conditions	Min.	Typ.	Max.	Unit
V_{ISO}	Withstand Insulation Test Voltage	All	Relative Humidity ≤ 50%, I_{I-O} ≤ 10 µA, t = 1 min, f = 50 Hz[12][13]	5,000			VAC_{RMS}
R_{I-O}	Resistance (Input to Output)	All	V_{I-O} = 500 V_{DC}[12]		10^{11}		Ω
C_{I-O}	Capacitance (Input to Output)	All	f = 1 MHz, V_{I-O} = 0 V_{DC}[12]		1		pF
I_{I-O}	Input-Output Insulation Leakage Current	All	Relative Humidity ≤ 45%, V_{I-I} = 3000 V_{DC}, t = 5 sec[12]			1.0	µA

Notes:

12. Device is considered a two terminal device: pins 1, 2, 3 and 4 are shorted together and pins 5, 6, 7 and 8 are shorted together.
13. 5000 VAC_{RMS} for 1 minute duration is equivalent to 6000 VAC_{RMS} for 1 second duration.

chanhvinh.com

Typical Performance Curves

For Single-Channel Devices: 6N137M, HCPL2601M, and HCPL2611M

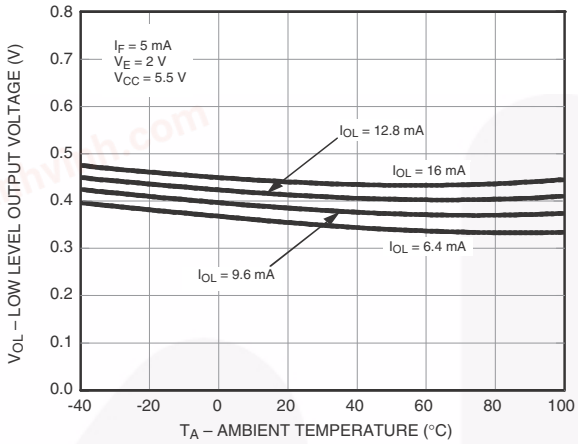

Figure 3. Low Level Output Voltage vs. Ambient Temperature

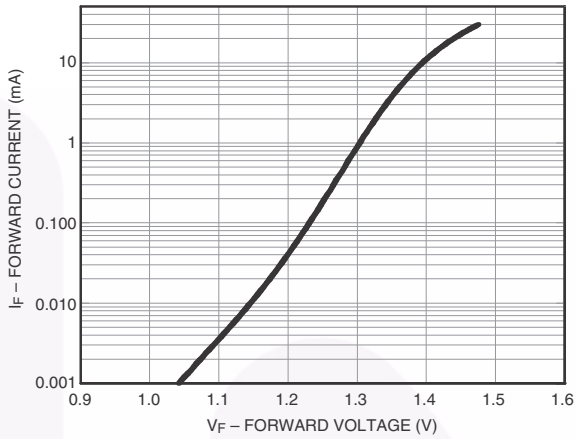

Figure 4. Input Diode Forward Voltage vs. Forward Current

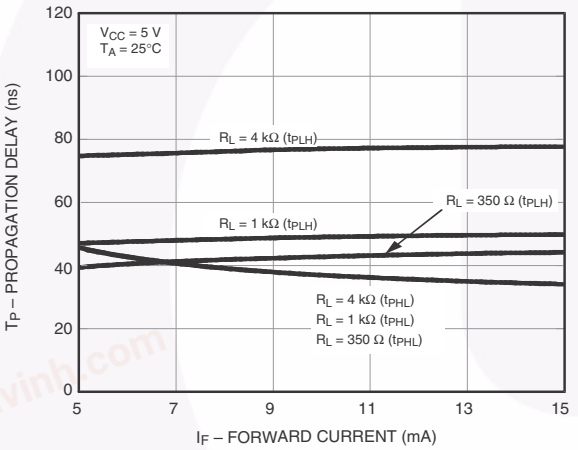

Figure 5. Switching Time vs. Forward Current

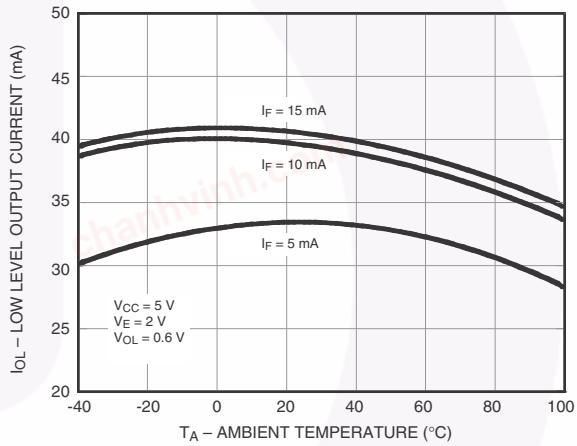

Figure 6. Low Level Output vs. Ambient Temperature

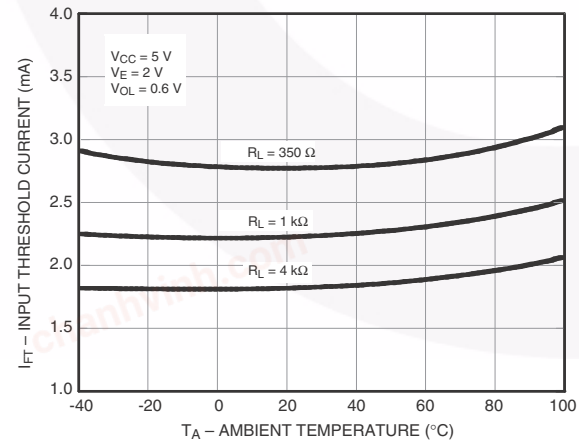

Figure 7. Input Threshold Current vs. Ambient Temperature

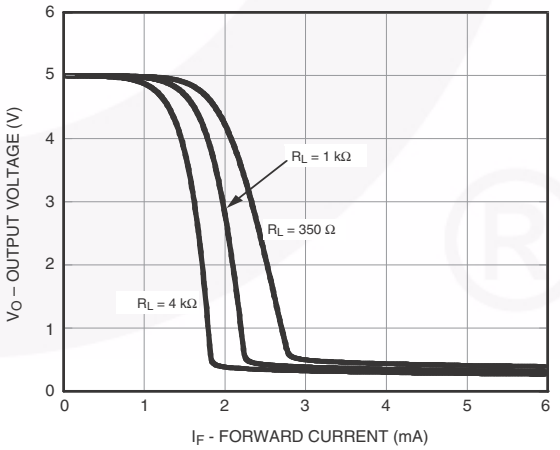

Figure 8. Output Voltage vs. Input Forward Current

chanhvinh.com

Typical Performance Curves (Continued)

For Single-Channel Devices: 6N137M, HCPL2601M, HCPL2611M

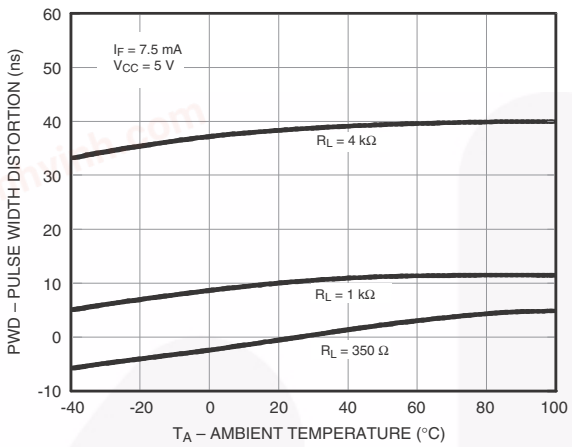

Figure 9. Pulse Width Distortion vs. Temperature

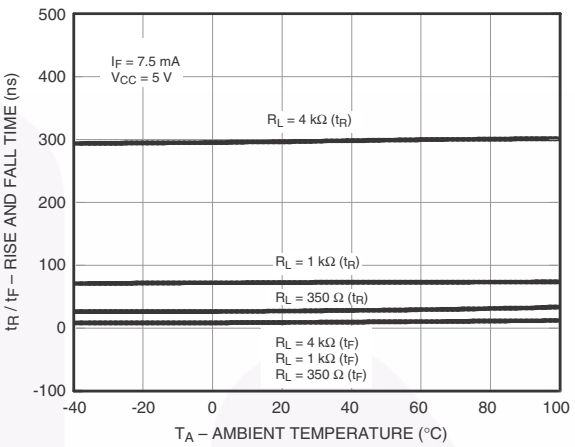

Figure 10. Rise and Fall Time vs. Temperature

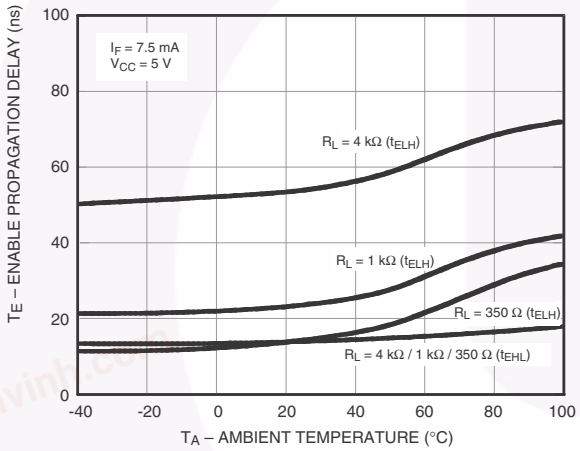

Figure 11. Enable Propagation Delay vs. Temperature

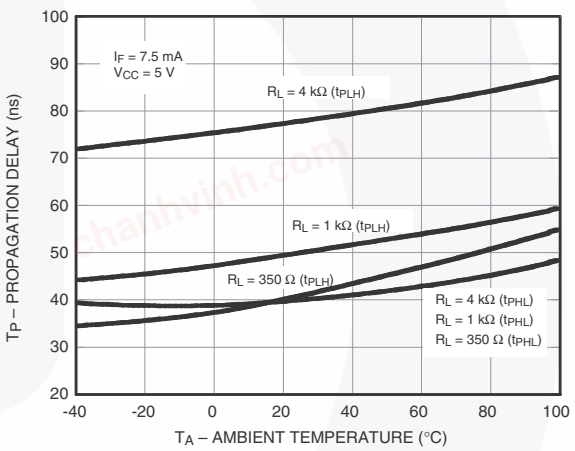

Figure 12. Switching Time vs. Temperature

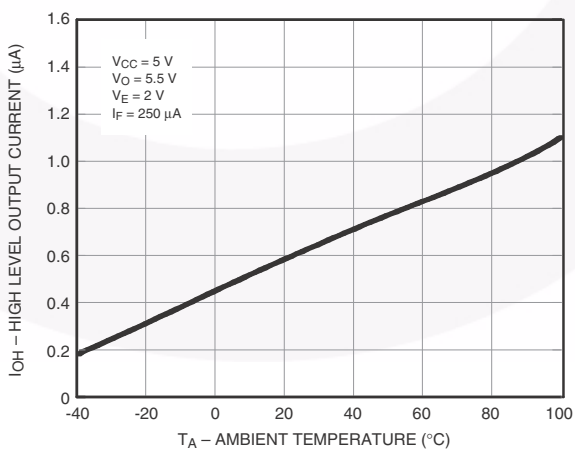

Figure 13. High Level Output Current vs. Temperature

chanhvinh.com

Typical Performance Curves (Continued)

For Dual-Channel Devices: HCPL2630M and HCPL2631M

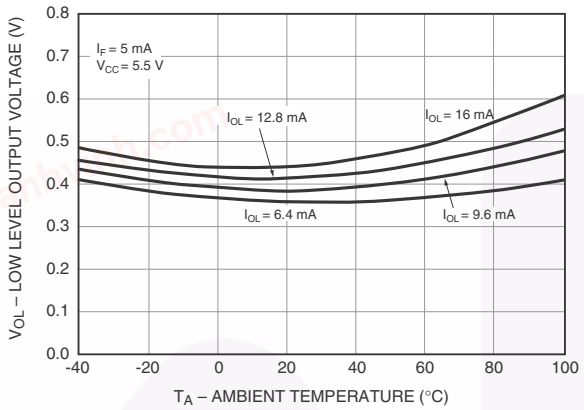

Figure 14. Low Level Output Voltage vs. Ambient Temperature

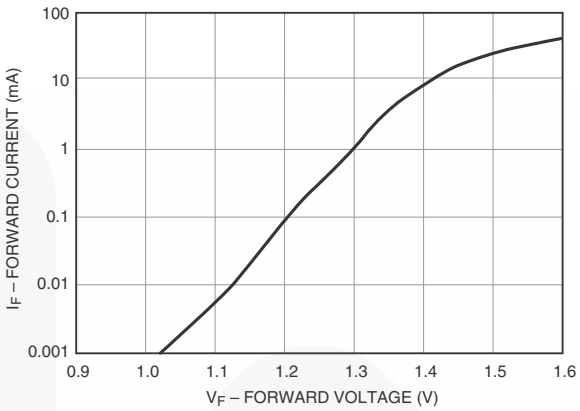

Figure 15. Input Diode Forward Voltage vs. Forward Current

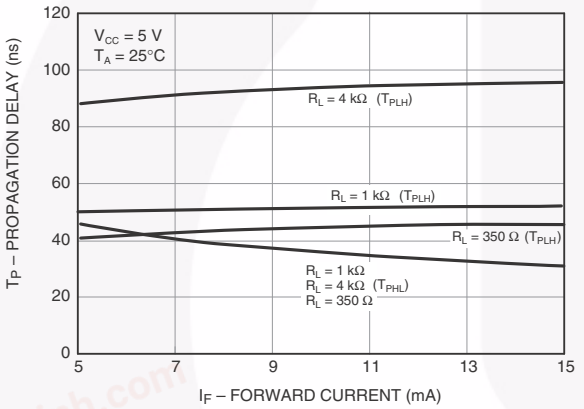

Figure 16. Switching Time vs. Forward Current

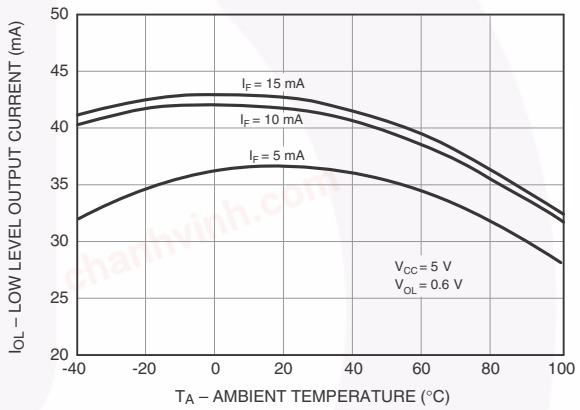

Figure 17. Low Level Output Current vs. Ambient Temperature

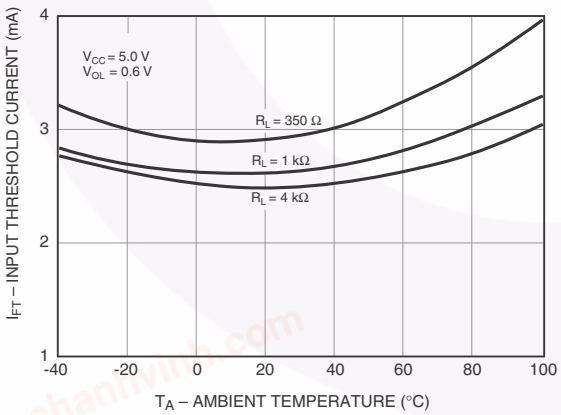

Figure 18. Input Threshold Current vs. Ambient Temperature

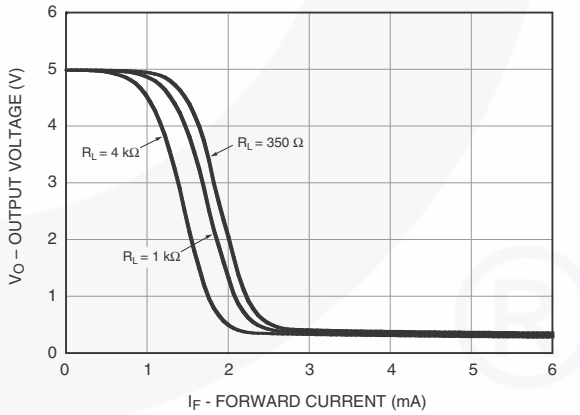

Figure 19. Output Voltage vs. Input Forward Current

chanhvinh.com

Typical Performance Curves (Continued)

For Dual-Channel Devices: HCPL2630M and HCPL2631M

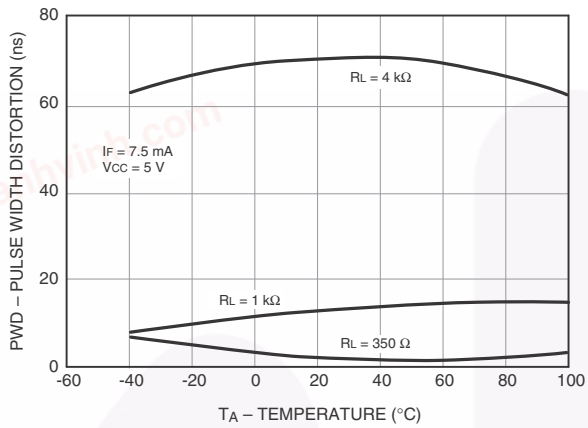

Figure 20. Pulse Width Distortion vs. Temperature

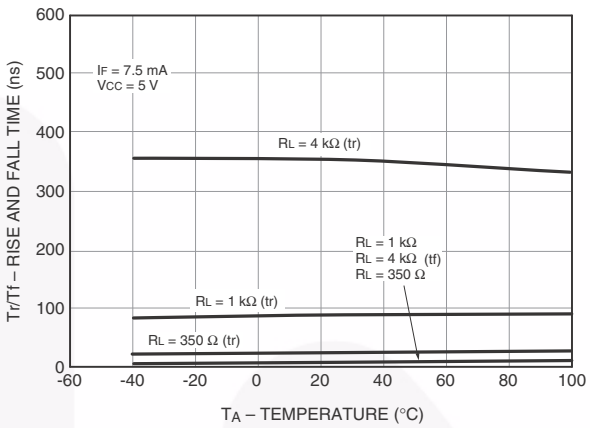

Figure 21. Rise and Fall Time vs. Temperature

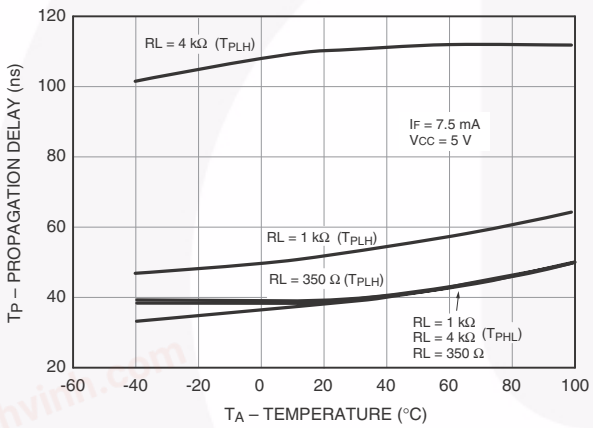

Figure 22. Switching Time vs. Temperature

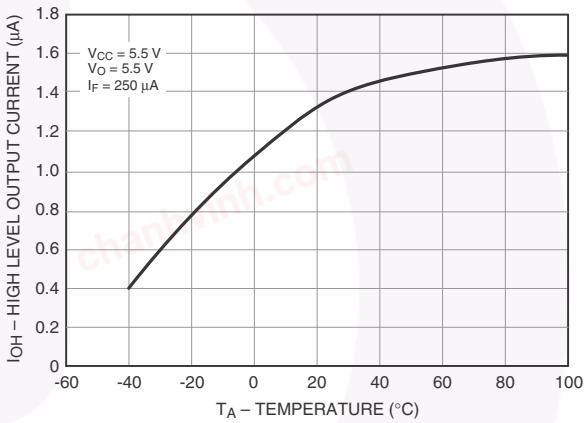

Figure 23. High Level Output Current vs. Temperature

chanhvinh.com

Test Circuits

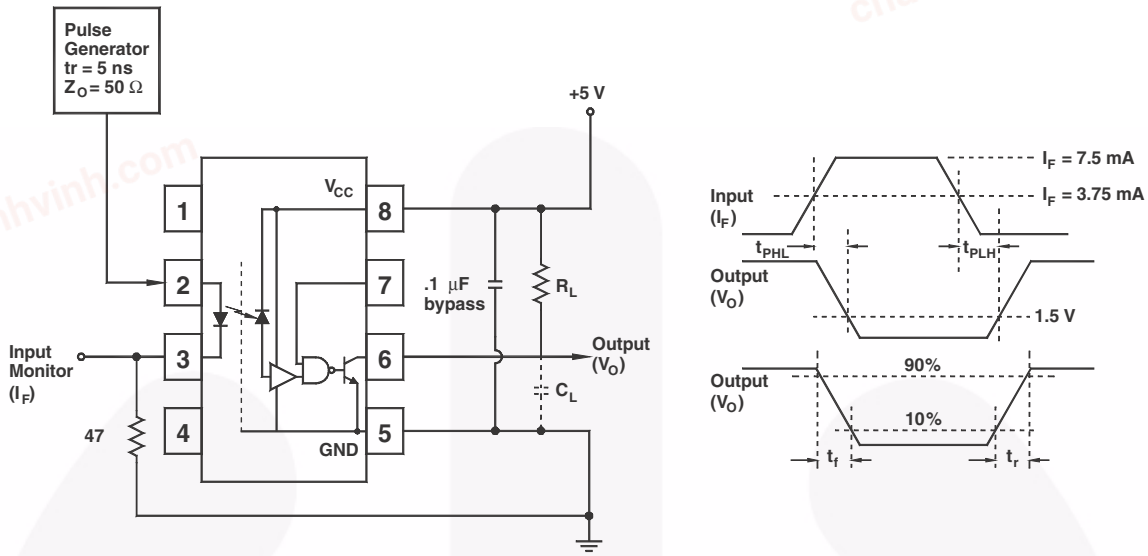

Figure 24. Test Circuit and Waveforms for t_{PLH}, t_{PHL}, t_r and t_f

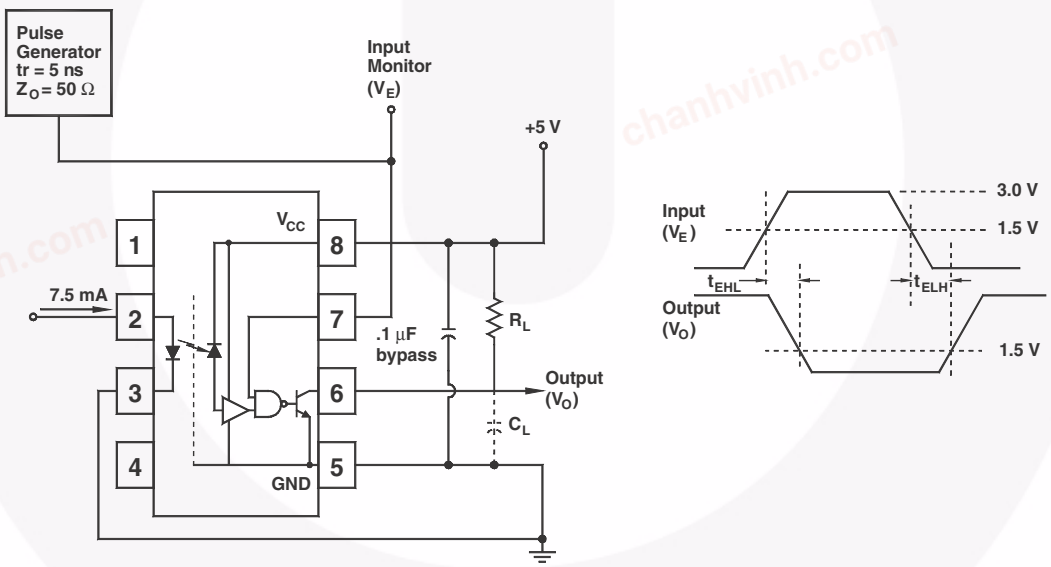

Figure 25. Test Circuit t_{EHL} and t_{ELH}

chanhvinh.com

Test Circuits (Continued)

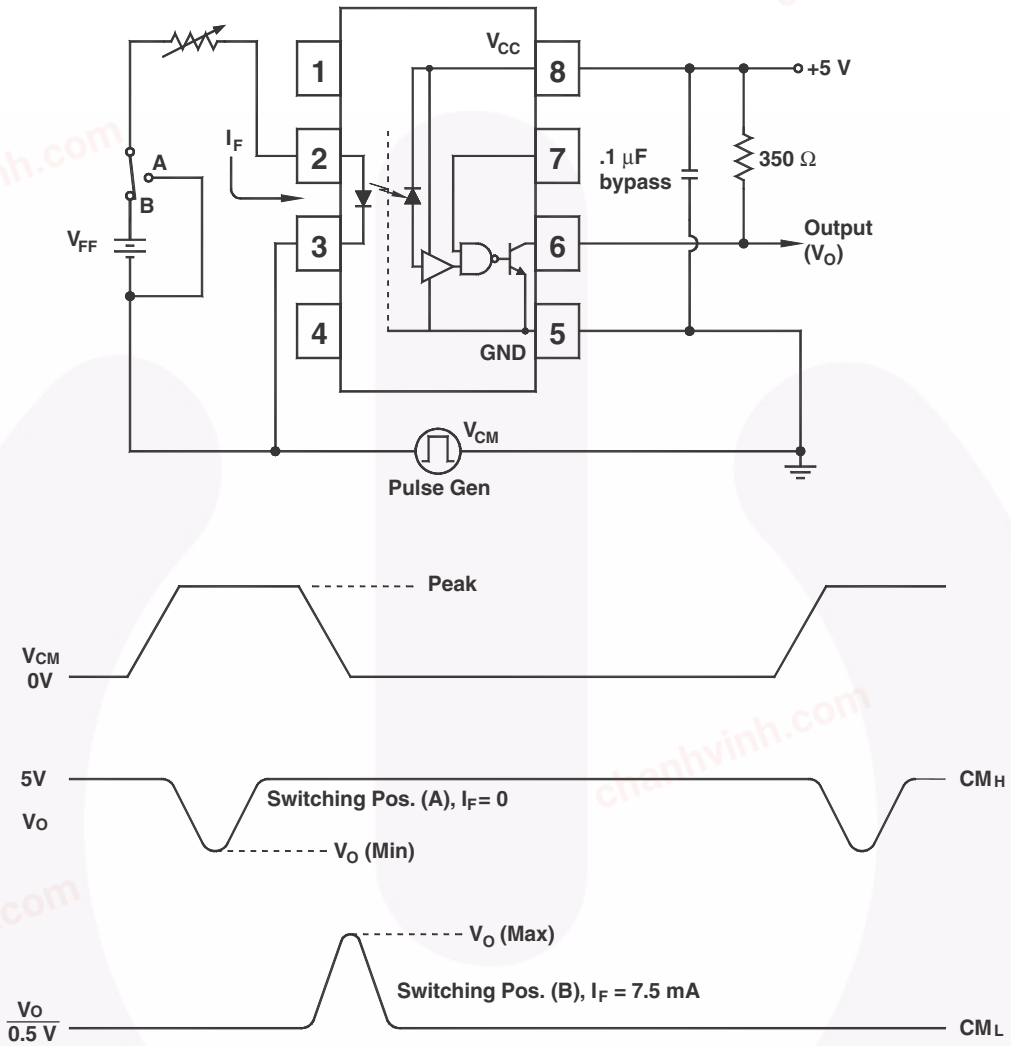

Figure 26. Test Circuit Common Mode Transient Immunity

chanhvinh.com

Reflow Profile

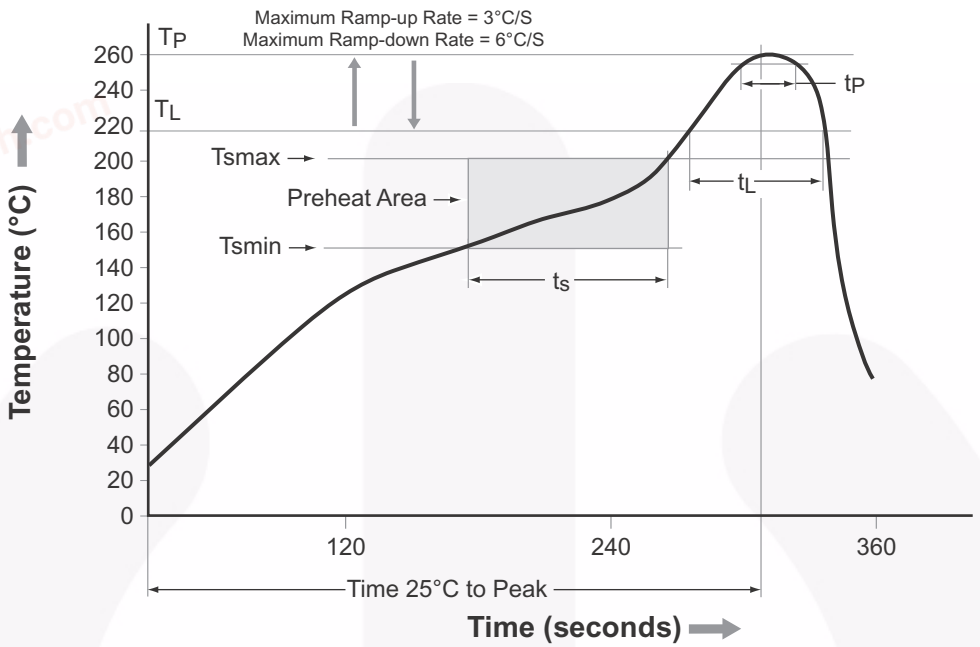

Profile Freature	Pb-Free Assembly Profile
Temperature Min. (Tsmin)	150°C
Temperature Max. (Tsmax)	200°C
Time (t_S) from (Tsmin to Tsmax)	60 to 120 s
Ramp-up Rate (t_L to t_P)	3°C/second maximum
Liquidous Temperature (T_L)	217°C
Time (t_L) Maintained Above (T_L)	60 to 150 s
Peak Body Package Temperature	260°C +0°C / –5°C
Time (t_P) within 5°C of 260°C	30 s
Ramp-down Rate (T_P to T_L)	6°C/s maximum
Time 25°C to Peak Temperature	8 minutes maximum

Figure 27. Reflow Profile

chanhvinh.com

Ordering Information

Part Number	Package	Packing Method
6N137M	DIP 8-Pin	Tube (50 units per tube)
6N137SM	SMT 8-Pin (Lead Bend)	Tube (50 units per tube)
6N137SDM	SMT 8-Pin (Lead Bend)	Tape and Reel (1,000 units per reel)
6N137VM	DIP 8-Pin, DIN EN/IEC 60747-5-5 Option	Tube (50 units per tube)
6N137SVM	SMT 8-Pin (Lead Bend), DIN EN/IEC 60747-5-5 Option	Tube (50 units per tube)
6N137SDVM	SMT 8-Pin (Lead Bend), DIN EN/IEC 60747-5-5 Option	Tape and Reel (1,000 units per reel)
6N137TVM	DIP 8-Pin, 0.4” Lead Spacing, DIN EN/IEC 60747-5-5 Option	Tube (50 units per tube)
6N137TSVM	SMT 8-Pin, 0.4” Lead Spacing, DIN EN/IEC 60747-5-5 Option	Tube (50 units per tube)
6N137TSR2VM	SMT 8-Pin, 0.4” Lead Spacing, DIN EN/IEC 60747-5-5 Option	Tape and Reel (1,000 units per reel)

Note:
The product orderable part number system listed in this table also applies to the HCPL2601M, HCPL2611M, HCPL2630M and HCPL2631M product families.

Marking Information

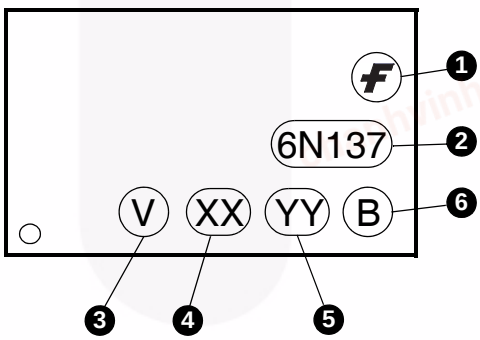

Figure 28. Top Mark

Definitions	
1	Fairchild Logo
2	Device Number
3	DIN EN/IEC60747-5-5 Option (only appears on component ordered with this option)
4	Two Digit Year Code, e.g., ‘16’
5	Two Digit Work Week Ranging from ‘01’ to ‘53’
6	Assembly Package Code

chanhvinh.com

Carrier Tape Specifications (Option SD)

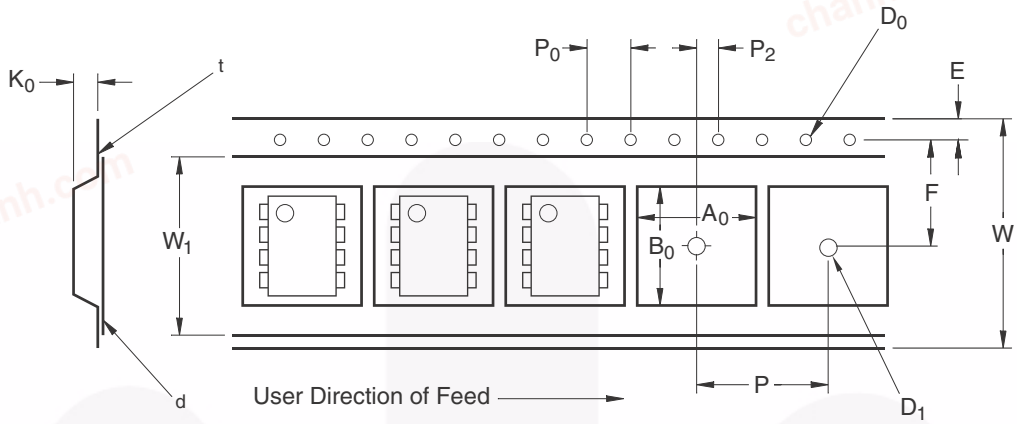

Symbol	Description	Dimension in mm
W	Tape Width	16.0 ± 0.3
t	Tape Thickness	0.30 ± 0.05
P_0	Sprocket Hole Pitch	4.0 ± 0.1
D_0	Sprocket Hole Diameter	1.55 ± 0.05
E	Sprocket Hole Location	1.75 ± 0.10
F	Pocket Location	7.5 ± 0.1
P_2		2.0 ± 0.1
P	Pocket Pitch	12.0 ± 0.1
A_0	Pocket Dimensions	10.30 ±0.20
B_0		10.30 ±0.20
K_0		4.90 ±0.20
W_1	Cover Tape Width	13.2 ± 0.2
d	Cover Tape Thickness	0.1 Maximum
	Maximum Component Rotation or Tilt	10°
R	Minimum Bending Radius	30

chanhvinh.com

Carrier Tape Specifications (Option TSR2)

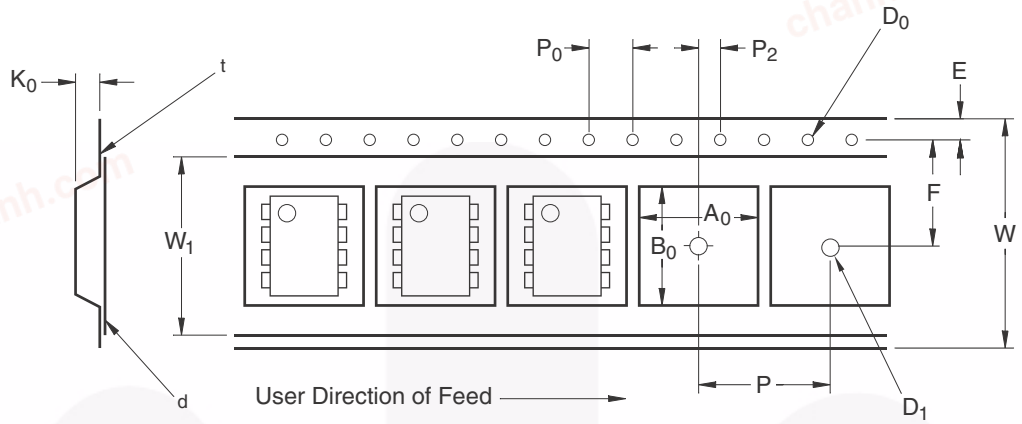

Symbol	Description	Dimension in mm
W	Tape Width	24.0 ± 0.3
t	Tape Thickness	0.40 ± 0.1
P_0	Sprocket Hole Pitch	4.0 ± 0.1
D_0	Sprocket Hole Diameter	1.55 ± 0.05
E	Sprocket Hole Location	1.75 ± 0.10
F	Pocket Location	11.5 ± 0.1
P_2		2.0 ± 0.1
P	Pocket Pitch	16.0 ± 0.1
A_0	Pocket Dimensions	12.80 ± 0.1
B_0		10.35 ± 0.1
K_0		5.7 ±0.1
W_1	Cover Tape Width	21.0 ± 0.1
d	Cover Tape Thickness	0.1 Maximum
	Maximum Component Rotation or Tilt	10°
R	Minimum Bending Radius	30

chanhvinh.com

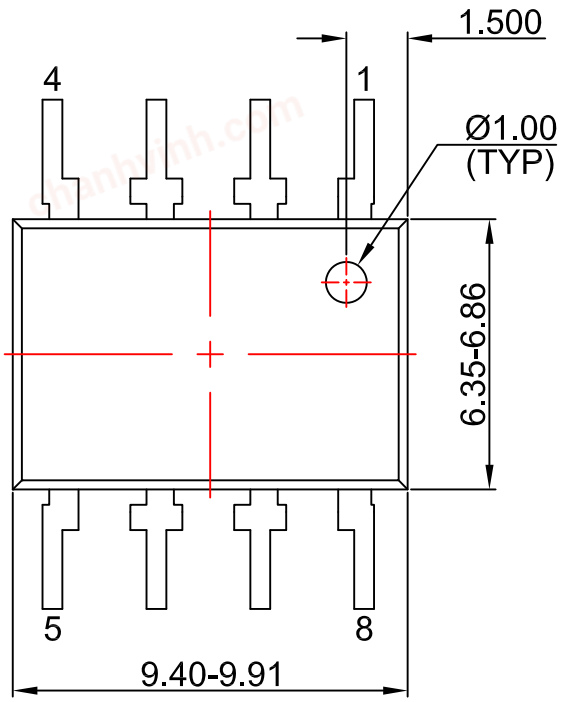

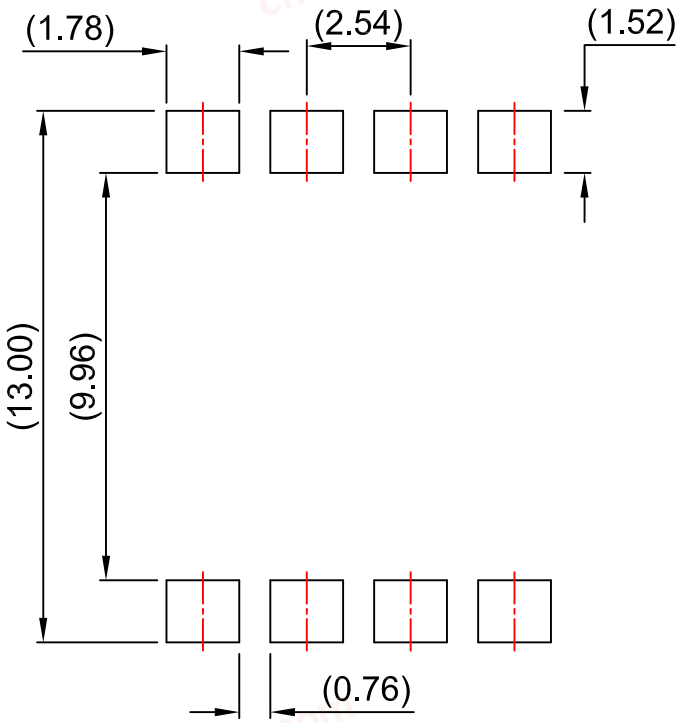

LAND PATTERN RECOMMENDATION

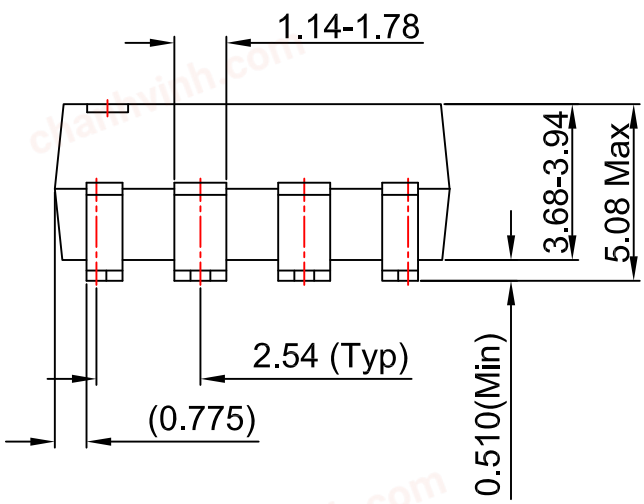

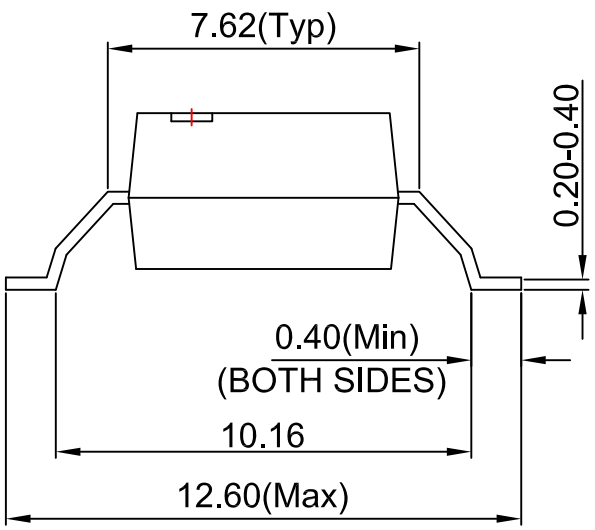

NOTES:

A) NO STANDARD APPLIES TO THIS PACKAGE

B) ALL DIMENSIONS ARE IN MILLIMETERS.

C) DIMENSIONS ARE EXCLUSIVE OF BURRS, MOLD FLASH, AND TIE BAR EXTRUSION

D) DWG FILENAME AND REVISION: MKT-N08Lrev2.

FAIRCHILD™

chanhvinh.com

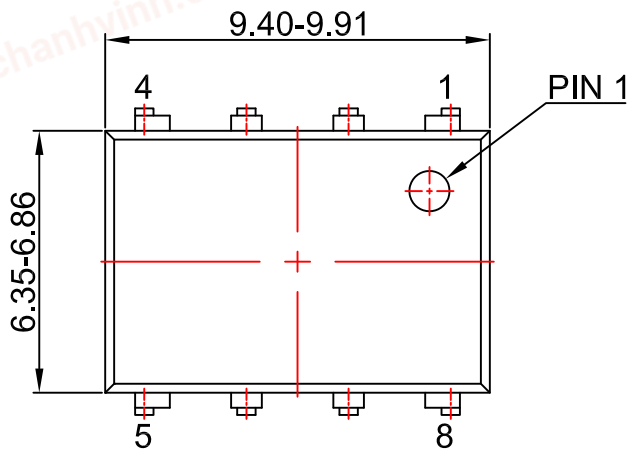

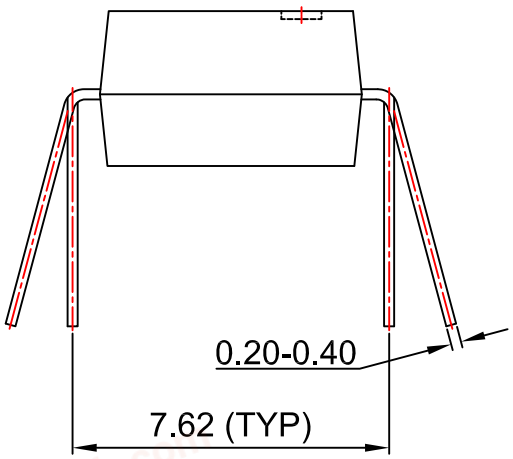

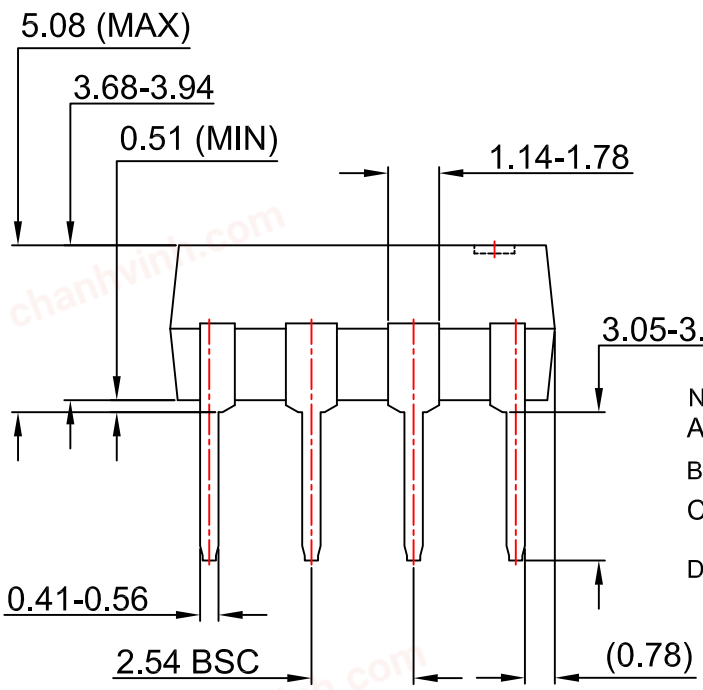

NOTES:

A) NO STANDARD APPLIES TO THIS PACKAGE

B) ALL DIMENSIONS ARE IN MILLIMETERS.

C) DIMENSIONS ARE EXCLUSIVE OF BURRS, MOLD FLASH, AND TIE BAR EXTRUSION

D) DRAWING FILENAME AND REVSION: MKT-N08GREV7

FAIRCHILD

chanhvinh.com

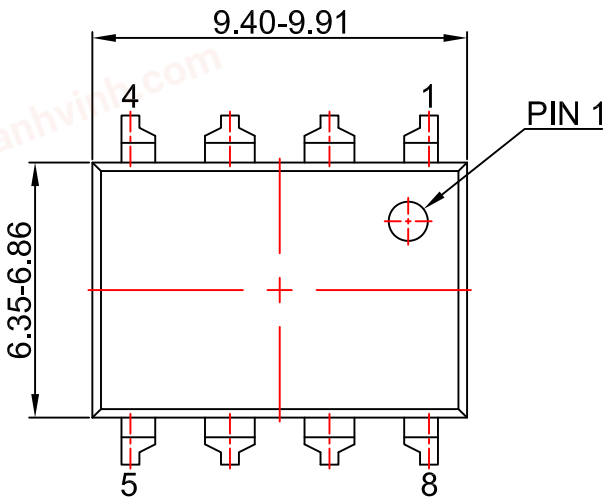

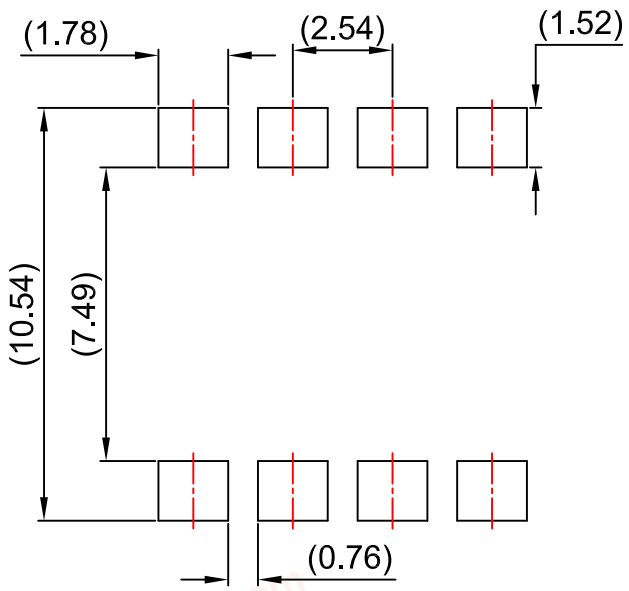

LAND PATTERN RECOMMENDATION

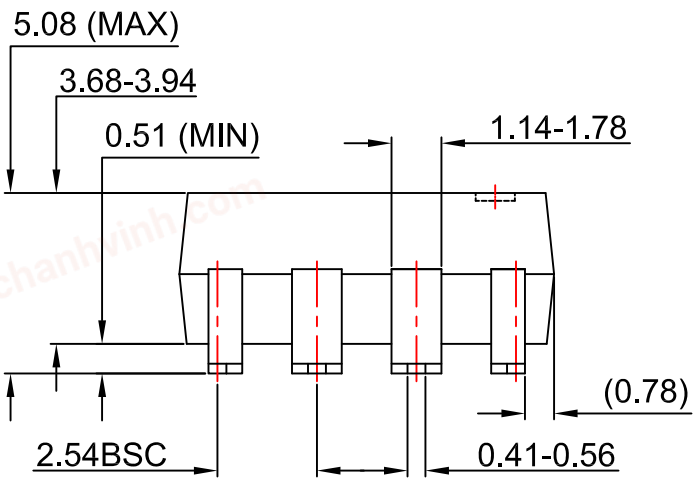

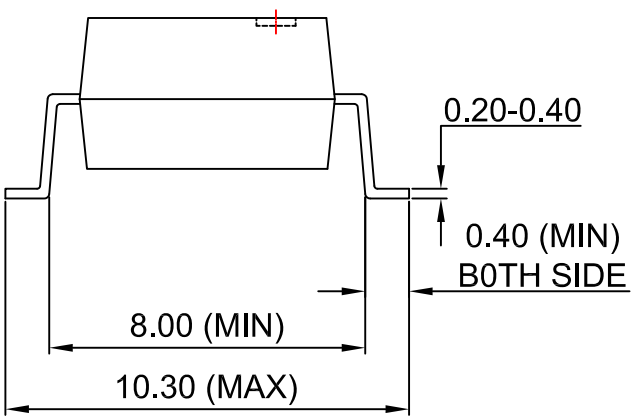

NOTES:

A) NO STANDARD APPLIES TO THIS PACKAGE

B) ALL DIMENSIONS ARE IN MILLIMETERS.

C) DIMENSIONS ARE EXCLUSIVE OF BURRS, MOLD FLASH, AND TIE BAR EXTRUSION

D) DRAWING FILENAME AND REVSION: MKT-N08Hrev7.

FAIRCHILD

chanhvinh.com

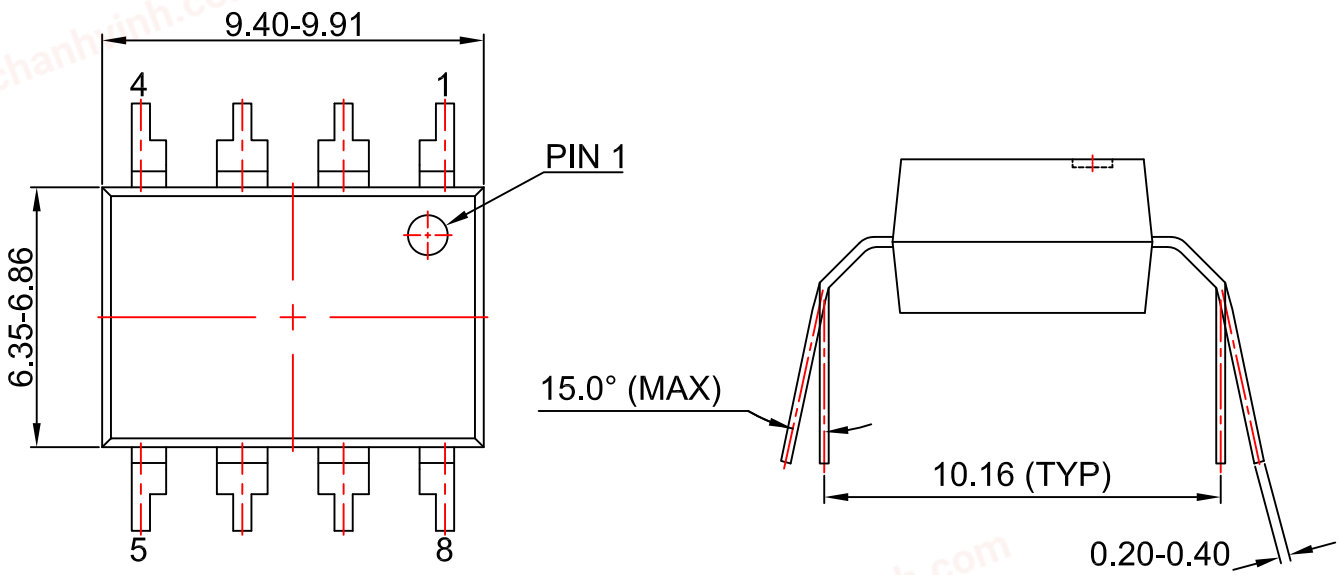

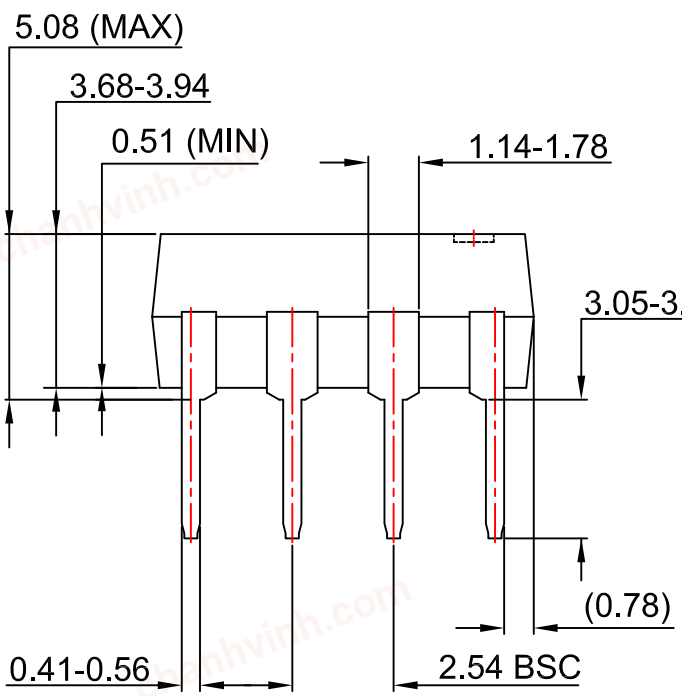

NOTES:

A) NO STANDARD APPLIES TO THIS PACKAGE

B) ALL DIMENSIONS ARE IN MILLIMETERS.

C) DIMENSIONS ARE EXCLUSIVE OF BURRS, MOLD FLASH, AND TIE BAR EXTRUSION

D) DRAWING FILENAME AND REVSION: MKT-N08REV7

FAIRCHILD

chanhvinh.com

ON Semiconductor and ON are trademarks of Semiconductor Components Industries, LLC dba ON Semiconductor or its subsidiaries in the United States and/or other countries. ON Semiconductor owns the rights to a number of patents, trademarks, copyrights, trade secrets, and other intellectual property. A listing of ON Semiconductor's product/patent coverage may be accessed at www.onsemi.com/site/pdf/Patent−Marking.pdf. ON Semiconductor reserves the right to make changes without further notice to any products herein. ON Semiconductor makes no warranty, representation or guarantee regarding the suitability of its products for any particular purpose, nor does ON Semiconductor assume any liability arising out of the application or use of any product or circuit, and specifically disclaims any and all liability, including without limitation special, consequential or incidental damages. Buyer is responsible for its products and applications using ON Semiconductor products, including compliance with all laws, regulations and safety requirements or standards, regardless of any support or applications information provided by ON Semiconductor. "Typical" parameters which may be provided in ON Semiconductor data sheets and/or specifications can and do vary in different applications and actual performance may vary over time. All operating parameters, including "Typicals" must be validated for each customer application by customer's technical experts. ON Semiconductor does not convey any license under its patent rights nor the rights of others. ON Semiconductor products are not designed, intended, or authorized for use as a critical component in life support systems or any FDA Class 3 medical devices or medical devices with a same or similar classification in a foreign jurisdiction or any devices intended for implantation in the human body. Should Buyer purchase or use ON Semiconductor products for any such unintended or unauthorized application, Buyer shall indemnify and hold ON Semiconductor and its officers, employees, subsidiaries, affiliates, and distributors harmless against all claims, costs, damages, and expenses, and reasonable attorney fees arising out of, directly or indirectly, any claim of personal injury or death associated with such unintended or unauthorized use, even if such claim alleges that ON Semiconductor was negligent regarding the design or manufacture of the part. ON Semiconductor is an Equal Opportunity/Affirmative Action Employer. This literature is subject to all applicable copyright laws and is not for resale in any manner.

PUBLICATION ORDERING INFORMATION

LITERATURE FULFILLMENT:
Literature Distribution Center for ON Semiconductor
19521 E. 32nd Pkwy, Aurora, Colorado 80011 USA
Phone: 303−675−2175 or 800−344−3860 Toll Free USA/Canada
Fax: 303−675−2176 or 800−344−3867 Toll Free USA/Canada
Email: orderlit@onsemi.com

N. American Technical Support: 800−282−9855 Toll Free USA/Canada
Europe, Middle East and Africa Technical Support:
Phone: 421 33 790 2910
Japan Customer Focus Center
Phone: 81−3−5817−1050

ON Semiconductor Website: **www.onsemi.com**

Order Literature: http://www.onsemi.com/orderlit

For additional information, please contact your local Sales Representative

© Semiconductor Components Industries, LLC