chanhvinh.com

OMRON

R88D-1SN□□□-ECT

1S servo drive



Sysmac general purpose servo

- 23-bit resolution encoder
- Fast and secure screw-less push-in in all connectors
- Pluggable connectors for easy pre-wiring and system maintenance
- Direct wiring of I/O signals
- Embedded relay for direct motor brake control
- Improved loop control for overshoot and quick setting time
- Safety function built-in:
  Network Safe Torque Off: PLd (EN ISO 13849-1), SIL2 (IEC 61508)
  Hardwired Safe Torque Off: PLe (EN ISO 13849-1), SIL3 (IEC 61508)

Ratings

- 230 VAC single-phase: 100 W to 1.5 kW
- 400 VAC three-phase: 600 W to 15 kW

System configuration

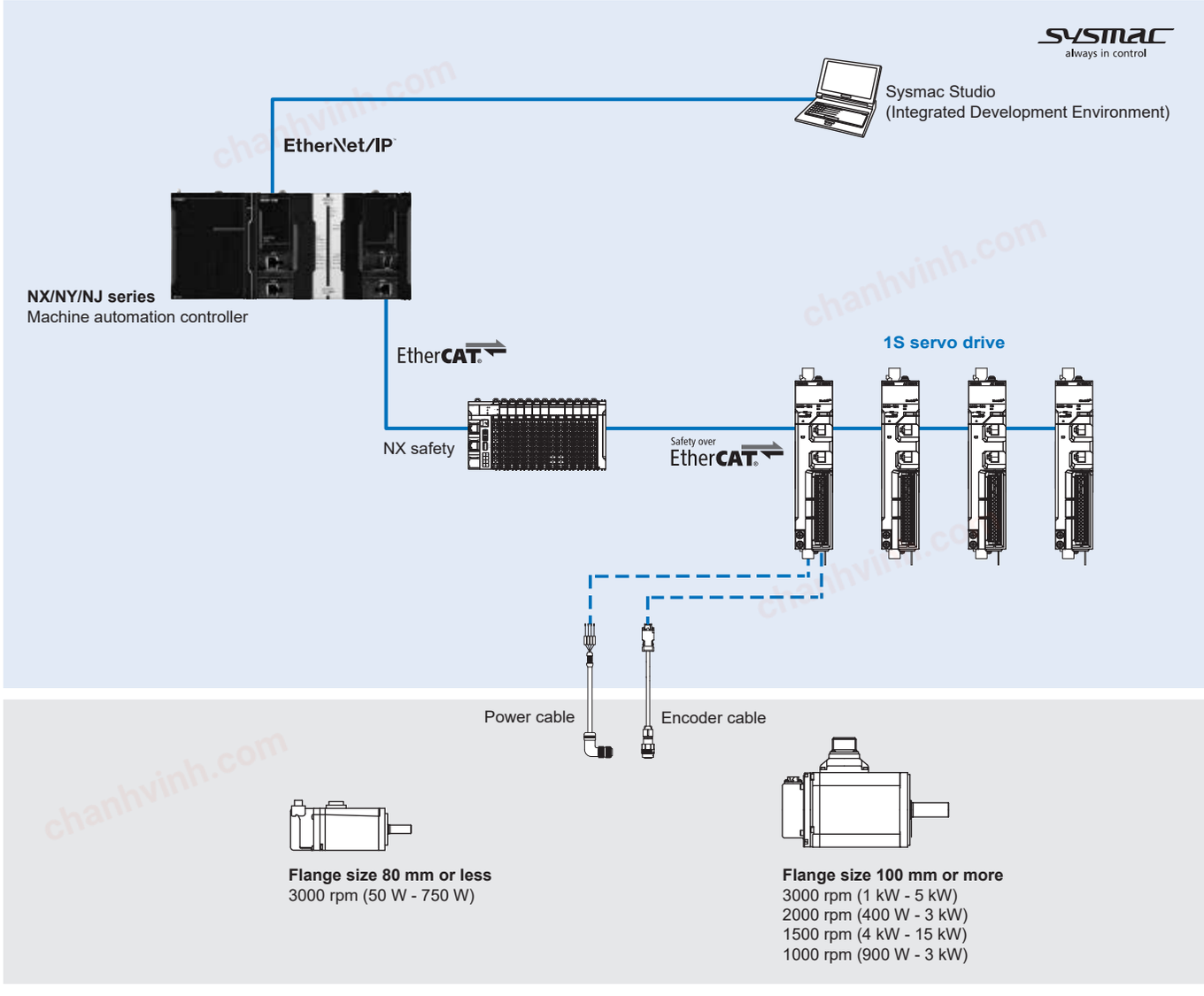

chanhvinh.com

OMRON

Type designation

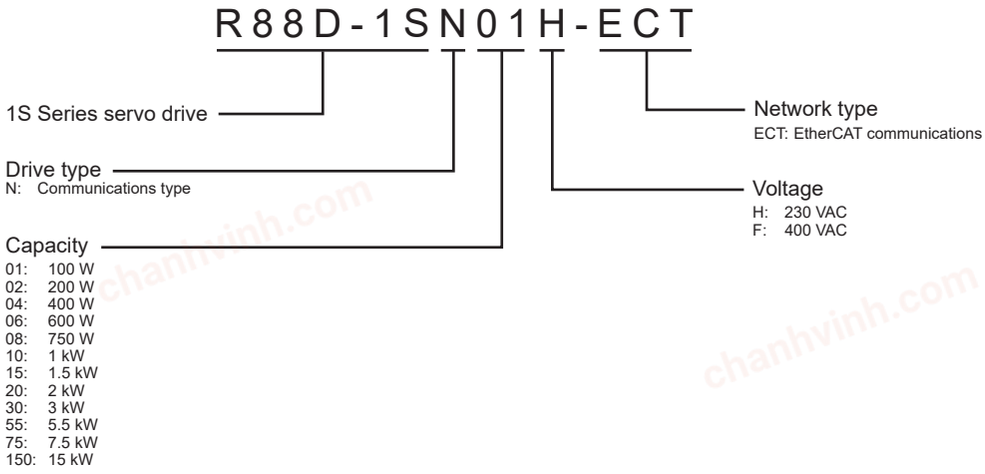

Specifications

Single-phase, 230 V

Servo drive model				R88D-1SN01H-ECT	R88D-1SN02H-ECT	R88D-1SN04H-ECT	R88D-1SN08H-ECT	R88D-1SN15H-ECT
Applicable servo motor			3000 r/min	R88M-1M05030T R88M-1M10030(H/T)	R88M-1M20030(H/T)	R88M-1M40030(H/T)	R88M-1M75030(H/T)	R88M-1L1K030(H/T) R88M-1L1K530(H/T)
			2000 r/min	-	-	-	-	R88M-1M1K020(H/T) R88M-1M1K520(H/T)
			1000 r/min	-	-	-	-	R88M-1M90010T
Max. applicable motor capacity			W	100	200	400	750	1500
Input	Control circuit	Power supply voltage	V	24 VDC (21.6 to 26.4 V)				
	Main circuit	Power supply voltage	V	Single-phase 200 to 240 VAC (170 to 252 V)				
		Frequency	Hz	50/60 Hz (47.5 to 63 Hz)				
	Rated input current	Single-phase	Arms	1.8	2.7	4.6	7.3	15.7
Output	Rated output current		Arms	0.8	1.5	2.5	4.6	9.7
	Max. current		Arms	3.1	5.6	9.1	16.9	28.4
Basic	Ambient operating/storage temperature			0 to 55°C/-20 to 65°C				
	Ambient operating/storage humidity			90% RH or less (without condensation)				
	Atmosphere			Must be free from corrosive gases				
	Altitude			1000 m or less				
	Vibration resistance (max.)			5.88 m/s^2, 10 to 60 Hz (continuous operation at resonance point is not allowed)				
	Degree of protection			IP20 (Built into IP54 panel)				
Weight			kg	1.2	1.2	1.5	2.0	3.4

chanhvinh.com

Three-phase, 400 V

Servo drive model				R88D-1SN06F-ECT	R88D-1SN10F-ECT	R88D-1SN15F-ECT	R88D-1SN20F-ECT
Applicable servo motor			3000 r/min	-	R88M-1L75030C R88M-1L1K030C	R88M-1L1K530C	R88M-1L2K030C
			2000 r/min	R88M-1M40020C R88M-1M60020C	R88M-1M1K020C	R88M-1M1K520C	R88M-1M2K020C
			1000 r/min	-	R88M-1M90010C	-	R88M-1M2K010C
Max. applicable motor capacity			W	600	1000	1500	2000
Input	Control circuit	Power supply voltage	V	24 VDC (21.6 to 26.4 V)			
	Main circuit	Power supply voltage	V	Three-phase 380 to 480 VAC (323 to 504 V)			
		Frequency	Hz	50/60 Hz (47.5 to 63 Hz)			
	Rated input current	Three-phase	Arms	2.4	3.1	4.3	6.5
Output	Rated output current		Arms	1.8	4.1	4.7	7.8
	Max. current		Arms	5.5	9.6	14.1	19.8
Basic	Ambient operating/storage temperature			0 to 55°C/-20 to 65°C			
	Ambient operating/storage humidity			90% RH or less (without condensation)			
	Atmosphere			Must be free from corrosive gases			
	Altitude			1000 m or less			
	Vibration resistance (max.)			5.88 m/s^2, 10 to 60 Hz (continuous operation at resonance point is not allowed)			
	Degree of protection			IP20 (Built into IP54 panel)			
Weight			kg	3.4	3.4	3.4	3.4

Servo drive model				R88D-1SN30F-ECT	R88D-1SN55F-ECT	R88D-1SN75F-ECT	R88D-1SN150F-ECT
Applicable servo motor			3000 r/min	R88M-1L3K030C	R88M-1L4K030C-□ R88M-1L5K030C-□	-	-
			2000 r/min	R88M-1M3K020C	-	-	-
			1500 r/min	-	R88M-1M4K015C-□ R88M-1M5K515C-□	R88M-1M7K515C-□	R88M-1M11K015C-□ R88M-1M15K015C-□
			1000 r/min	R88M-1M3K010C	-	-	-
Max. applicable motor capacity			W	3000	5500	7500	15000
Input	Control circuit	Power supply voltage	V	24 VDC (21.6 to 26.4 V)			
	Main circuit	Power supply voltage	V	Three-phase 380 to 480 VAC (323 to 504 V)			
		Frequency	Hz	50/60 Hz (47.5 to 63 Hz)			
	Rated input current	Three-phase	Arms	8.4	16	23	40
Output	Rated output current		Arms	11.3	14.5	22.6	33.9
	Max. current		Arms	28.3	42.4	56.5	84.8
Basic	Ambient operating/storage temperature			0 to 55°C/-20 to 65°C			
	Ambient operating/storage humidity			90% RH or less (without condensation)			
	Atmosphere			Must be free from corrosive gases			
	Altitude			1000 m or less			
	Vibration resistance (max.)			5.88 m/s^2, 10 to 60 Hz (continuous operation at resonance point is not allowed)			
	Degree of protection			IP20 (Built into IP54 panel)			
Weight			kg	3.4	9.4	9.4	21

chanhvinh.com

OMRON

I/O specifications

Control I/O and safety connector (CN1)

Pin No.	Signal name	Function	Pin No.	Signal name	Function	
1	EDM+P	EDM+ output with short-circuit protection	21	EDM-	EDM- output	A monitor signal is output to detect a safety function failure. The Pin No. 22 is reserved.
2	EDM+	EDM+ output without short-circuit protection	22	SFA	Reserved	
3	SF1+	SF1+ input	23	SF1+	SF1+ input	Inputs 1 and 2 for operating the STO function, which are two independent circuits. This input turns OFF the power transistor drive signals in the servo drive to cut off the current output to the motor.
4	SF1-	SF1- input	24	SF1-	SF1- input	
5	SF2+	SF2+ input	25	SF2+	SF2+ input	
6	SF2-	SF2- input	26	SF2-	SF2- input	
7	SFB	Reserved	27	NC	NC	Reserved. Do not connect.
8	/ERR+	Error output	28	/ERR-	Error output common	If the servo drive detects an abnormality, it outputs an error (/ALM) and turns OFF the power drive circuit.
9	OUT1+	General-purpose output 1	29	OUT1-	General-purpose output 1 common	Output functions: Error output (ERR), Servo ready completed output (READY), Positioning completion output 1/2 (INP1/INP2), Motor rotation speed detection output (TGON), Torque limit output (TLMT), Zero speed detection output (ZSP), Speed conformity output (VCMP), Warning output 1/2 (WARN1/WARN2), Speed limiting output (VLIMIT), Error clear attribute output (ERR-ATB), Remote output 1/2/3 (R-OUT1/R-OUT2/R-OUT3), Zone notification output 1/2 (ZONE1/ZONE2), Position command status output (PCMD), Distribution completed output (DEN).
10	OUT2+	General-purpose output 2	30	OUT2-	General-purpose output 2 common	
11	OUT3+	General-purpose output 3	31	OUT3-	General-purpose output 3 common	
12	IN1	General-purpose input 1	32	IN2	General-purpose input 2	Input functions: Positive drive prohibition input (POT), Negative drive prohibition input (NOT), Error stop input (ESTP), External latch input 1/2 (EXT1/EXT2), Home proximity input (DEC), Positive torque limit input (PCL), Negative torque limit input (NCL), Monitor input 1/2/3/4/5/6/7/8 (MON1/MON2/MON3/MON4/MON5/MON6/MON7/MON8), Main circuit power supply ON/OFF input (PRDY).
13	IN3	General-purpose input 3	33	IN4	General-purpose input 4	
14	IN5	General-purpose input 5	34	IN6	General-purpose input 6	
15	IN7	General-purpose input 7 (high-speed input)	35	IN8	General-purpose input 8 (high-speed input)	
16	GND	Encoder GND	36	Common	12 to 24 VDC power supply	GND for encoder / Common for inputs.
17	A+	Encoder phase A+ output	37	A-	Encoder phase A- output	Encoder signal output. Line Drive output. EIARS422A compliant (load resistance: 120 Ω). Max. output frequency: 4 Mpps (when multiplied by 4).
18	B+	Encoder phase B+ output	38	B-	Encoder phase B- output	
19	Z+	Encoder phase Z+ output	39	Z-	Encoder phase Z- output	
20	FG	FG	40	FG	FG	Frame ground.

Encoder connector (CN2)

Pin No.	Signal name	Function	
1	E5V	Encoder power supply voltage	Encoder power supply voltage.
2	E0V	Encoder power supply GND	
3	NC	Not used	Not used.
4	NC	Not used	
5	PS+	Encoder+ phase-S I/O	Encoder phase-S I/O.
6	PS-	Encoder- phase-S I/O	
Shell	FG	Frame ground	Frame ground.

USB connector (CN7)

Pin No.	Signal name	Function	
1	VBUS	USB signal terminal	Used for computer communications.
2	D-		
3	D+		
4	Reserved	Reserved	Reserved. Do not connect.
5	GND	Signal ground	Signal ground.

Brake interlock connector (CN12)

Pin No.	Signal name	Function	
1	0V_BKIR	24 V power supply for brake -	24 V power supply for brake.
2	+24V_BKIR	24 V power supply for brake +	
3	BKIR-	Brake output -	Brake output.
4	BKIR+	Brake output +	

chanhvinh.com

I/O specifications (specific for 230 V, 100 W to 750 W models)

Main circuit connector (CNA)

Pin No.	Signal name	Function	
1	L1	Main circuit power supply input	Input for the main circuit power supply voltage. Single-phase 200 to 240 VAC (170 to 252 V), 50/60 Hz*1
2	L2		
3	L3		
4	B3	External regeneration resistor connection terminals	If regenerative energy is high, an external regeneration resistor is connected so that the regenerative energy can be absorbed. When an internal regeneration resistor is used: B1 and B2 are open, B2 and B3 are short-circuited*2. When an external regeneration resistor is used: The external regeneration resistor is connected between B1 and B2, B2 and B3 are open.
5	B2		
6	P/B1		
7	N1	DC reactor connection terminals	When the DC reactor is not used, short-circuit N1 and N2. When the DC reactor is used, connect the DC reactor between N1 and N2.
8	N2		
9	N3		
10	+24V	Control circuit power supply input	Input for the control power supply voltage. 24 VDC ±10% (21.6 to 26.4 V) Measured current value: 600 mA
11	0V		

*1 When the single-phase input is used, connect between any two phases out of the following: L1, L2 and L3.
*2 B2 and B3 shall be short-circuited in the factory setting.

Motor connector (CNC)

Pin No.	Signal name	Function	
1	U	Motor connection terminals	These are the connection terminals to the servo motor.
2	V		
3	W		

I/O specifications (specific for 230 V, 1.5 kW model / 400 V, 600 W to 3 kW models)

Main circuit connector A (CNA)

Pin No.	Signal name	Function	
1	B1	External regeneration resistor connection terminals	If regenerative energy is high, an external regeneration resistor is connected so that the regenerative energy can be absorbed. When an internal regeneration resistor is used: B1 and B2 are open, B2 and B3 are short-circuited*1. When an external regeneration resistor is used: The external regeneration resistor is connected between B1 and B2, B2 and B3 are open.
2	B2		
3	B3		
4	L3	Main circuit power supply input	Input for the main circuit power supply voltage. Single-phase 200 to 240 VAC (170 to 252 V), 50/60 Hz*2 Three-phase 380 to 480 VAC (323 to 504 V), 50/60 Hz
5	L2		
6	L1		

*1 B2 and B3 shall be short-circuited in the factory setting.
*2 When the single-phase input is used, connect between any two phases out of the following: L1, L2 and L3.

Main circuit connector B (CNB)

Pin No.	Signal name	Function	
1	N3	DC reactor connection terminals	When the DC reactor is not used, short-circuit N1 and N2. When the DC reactor is used, connect the DC reactor between N1 and N2.
2	N2		
3	N1		
4	P		

Motor connector (CNC)

Pin No.	Signal name	Function	
1	W	Motor connection terminals	These are the connection terminals to the servo motor.
2	V		
3	U		
4	FG		

Control circuit connector (CND)

Pin No.	Signal name	Function	
1	+24V	Control circuit power supply input	Input for the control power supply voltage. 24 VDC ±10% (21.6 to 26.4 V) Measured current value: 900 mA
2	0V		
3	NC	-	

chanhvinh.com

I/O specifications (specific for 400 V, 5.5 kW to 7.5 kW models)

Main circuit connector A (CNA)

Pin No.	Signal name	Function	
1	L1	Main circuit power supply input	3-phase 380 to 480 VAC (323 to 504 VAC) 50/60 Hz (47.5 to 63 Hz)
2	L2		
3	L3		
4	B3	External regeneration resistor connection terminals	When the internal regeneration resistor is used, open between B1 and B2, short-circuit B2 and B3. When the external regeneration resistor is used, connect the external regeneration resistor between B1 and B2, open between B2 and B3.
5	B2		
6	B1		

Main circuit connector B (CNB)

Pin No.	Signal name	Function	
1	P	DC reactor connection terminals	When the DC reactor is not used, short-circuit N1 and N2. When the DC reactor is used, connect the DC reactor between N1 and N2.
2	N1		
3	N2		
4	N3		

Motor connector (CNC)

Pin No.	Signal name	Function	
1	FG	Motor connection terminals	These are output terminals to the Servomotor. Be sure to wire them correctly.
2	U		
3	V		
4	W		

Control circuit connector (CND)

Pin No.	Signal name	Function	
1	+24 V	Control circuit power supply input	24 VDC (21.6 to 26.4 V) Measured current value: 900 mA
2	+24 V		
3	0 V		
4	0V		

Main circuit connector E (CNE)

Pin No.	Signal name	Function	
1	DB1	External dynamic brake resistor connection terminals	When the internal dynamic brake resistor is used, open between DB1 and DB2, short-circuit DB2 and DB3. When the external dynamic brake resistor is used, connect the external dynamic brake resistor between DB1 and DB2, open between DB2 and DB3.
2	DB2		
3	DB3		

chanhvinh.com

I/O specifications (specific for 400 V, 15 kW model)

Main circuit connector A (CNA)

Pin No.	Signal name	Function	
1	P	–	Do not connect.
2	N3		
3	L3	Main circuit power supply input	3-phase 380 to 480 VAC (323 to 504 VAC) 50/60 Hz (47.5 to 63 Hz)
4	L2		
5	L1		
6	⏚		

Main circuit connector B (CNB)

Pin No.	Signal name	Function	
1	B1	External regeneration resistor connection terminals	Connect the external regeneration resistor between B1 and B2. This Servo Drive does NOT install internal regeneration resistor.
2	B2		

Motor connector (CNC)

Pin No.	Signal name	Function	
1	FG	Motor connection terminals	These are output terminals to the Servomotor. Be sure to wire them correctly.
2	U		
3	V		
4	W		

Control circuit connector (CND)

Pin No.	Signal name	Function	
1	+24 V	Control circuit power supply input	24 VDC (21.6 to 26.4 V) Measured current value: 1,200 mA
2	+24 V		
3	0 V		
4	0V		

Main circuit connector E (CNE)

Pin No.	Signal name	Function	
1	DB1	External dynamic brake resistor connection terminals	When the internal dynamic brake resistor is used, open between DB1 and DB2, short-circuit DB2 and DB3. When the external dynamic brake resistor is used, connect the external dynamic brake resistor between DB1 and DB2, open between DB2 and DB3.
2	DB2		
3	DB3		

chanhvinh.com

chanhvinh.com

OMRON

Nomenclature

■ TOP VIEW (230 V, 100 W to 750 W models)

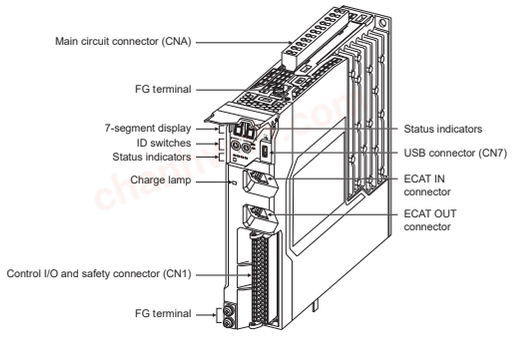

■ BOTTOM VIEW (230 V, 100 W to 750 W models)

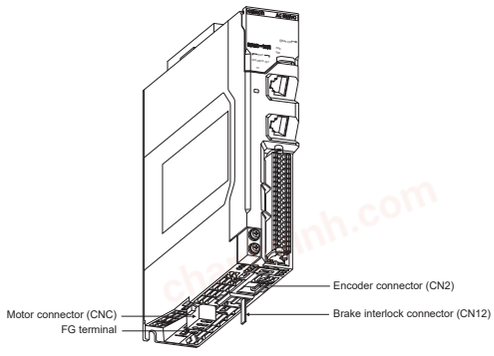

■ TOP VIEW (230 V, 1.5 kW model) (400 V, 600 W to 3 kW models)

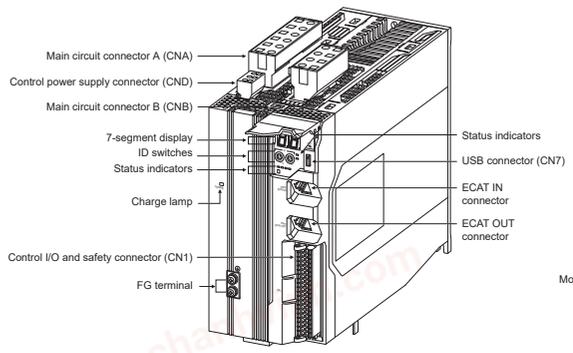

■ BOTTOM VIEW (230 V, 1.5 kW model) (400 V, 600 W to 3 kW models)

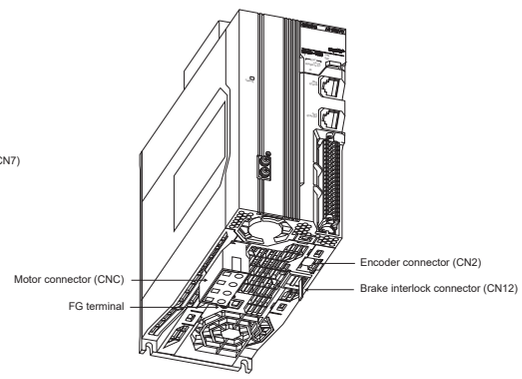

■ TOP VIEW (400 V, 5.5 kW to 7.5 kW models)

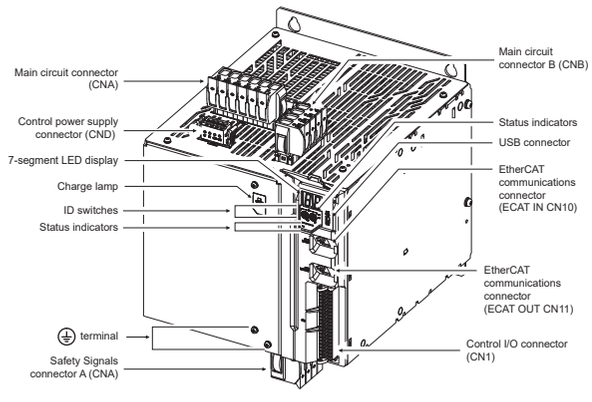

■ BOTTOM VIEW (400 V, 5.5 kW to 7.5 kW models)

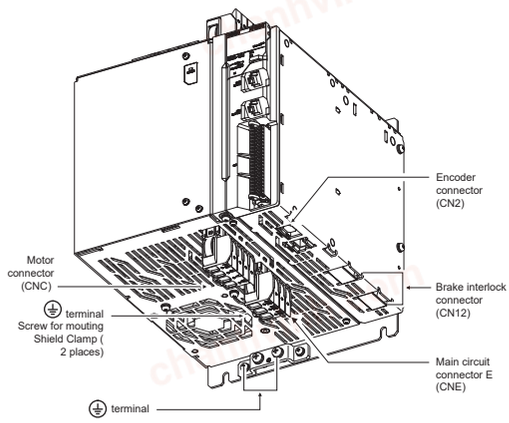

chanhvinh.com

■ TOP VIEW
(400 V, 15 kW model)

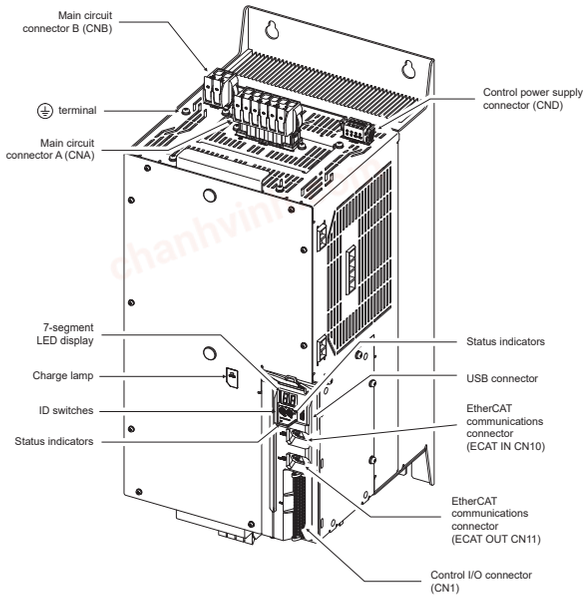

■ BOTTOM VIEW
(400 V, 15 kW model)

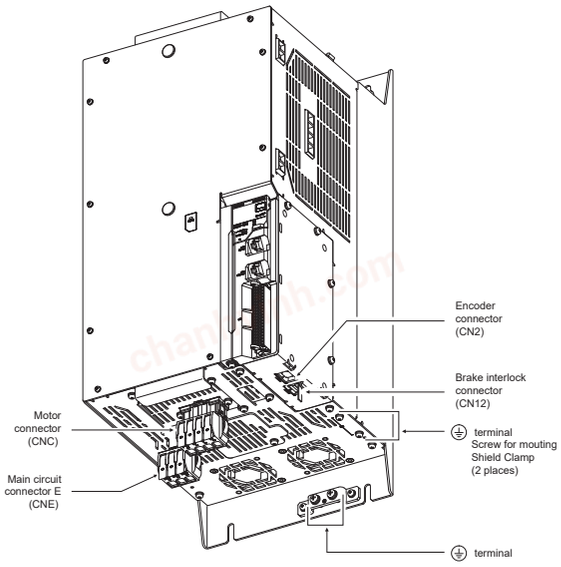

Name	Description
Status indicators	The following seven indicators are mounted: PWR (Green): Displays the status of the control power supply. ERR (Red): Displays the servo drive error status. ECAT-RUN (Green) and ECAT-ERR (Red): Displays the EtherCAT communications status. ECAT-L/A IN (Green) and ECAT-L/A OUT (Green): Lights or flashes according to the status of a link in the EtherCAT physical layer. FS (Red/Green): Displays the FSoE communications status.
7-segment display	A 2-digit 7-segment display shows error numbers, the servo drive status and other information.
ID switches	Two rotary switches (0 to F hex) are used to set the EtherCAT node address.
Charge lamp	Lights when the main circuit power supply is turned ON.
EtherCAT communications connectors	These connectors (ECAT IN and ECAT OUT) are for EtherCAT communications.
Control I/O and safety connector (CN1)	Used for command input signals, I/O signals and the safety device connector. The short-circuit wire is installed on the safety signals before shipment.
Encoder connector (CN2)	Connector for the encoder installed in the servo motor.
USB connector (CN7)	USB-Micro B communications connector for the computer. This connector enables USB 2.0 Full Speed (12 Mbps) communications.
Brake interlock connector (CN12)	Used for brake interlock signals.
Main circuit connector (CNA)*1	Connector for the main circuit power supply input, control power supply input, external regeneration resistor and DC reactor.
Main circuit connector A (CNA)*2	Connector for the main circuit power supply input and external regeneration resistor.
Main circuit connector A (CNA)*3	Connector for the main circuit power supply input and AC reactor.
Main circuit connector B (CNB)*2	Connector for a DC reactor.
Main circuit connector B (CNB)*3	Connector for a external regeneration resistor.
Motor connector (CNC)	Connector for the power line to U, V and W phases of the servo motor. The connector differs depending on the model.
Control power supply connector (CND)	Connector for control power supply input.
Main circuit connector E (CNE)*4	Connector for a external dynamic brake resistor.
FG terminals	Terminals for FG connection.

*1 Specific connector for 230 V, 100 W to 750 W models.
*2 Specific connector for 230 V, 1.5 kW model and 400 V, 600 W to 7.5 kW models.
*3 Specific connector for 400 V, 15 kW model.
*4 Specific connector for 400 V, 5.5 kW to 15 kW models.

chanhvinh.com

OMRON

Dimensions

Servo drives

R88D-1SN01H-ECT/02H-ECT (230 V, 100 W to 200 W)

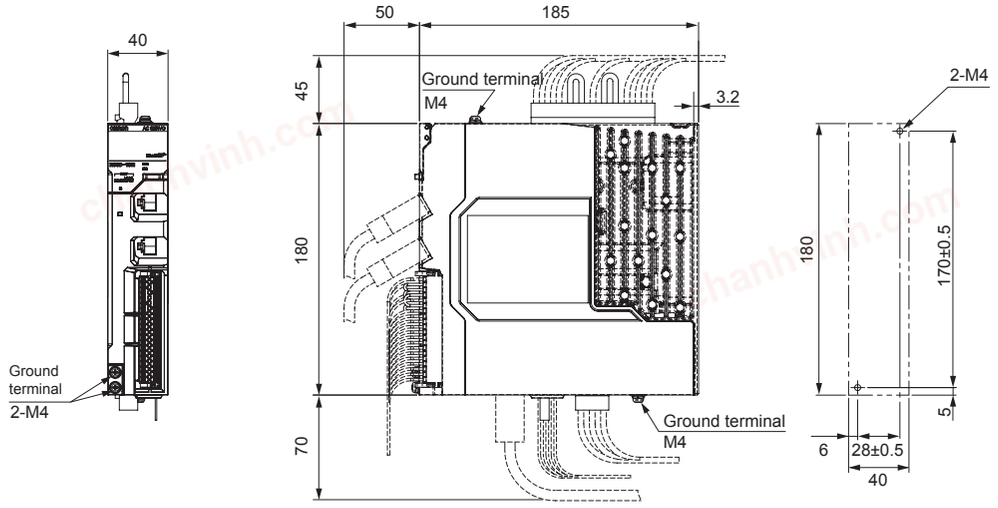

R88D-1SN04H-ECT (230 V, 400 W)

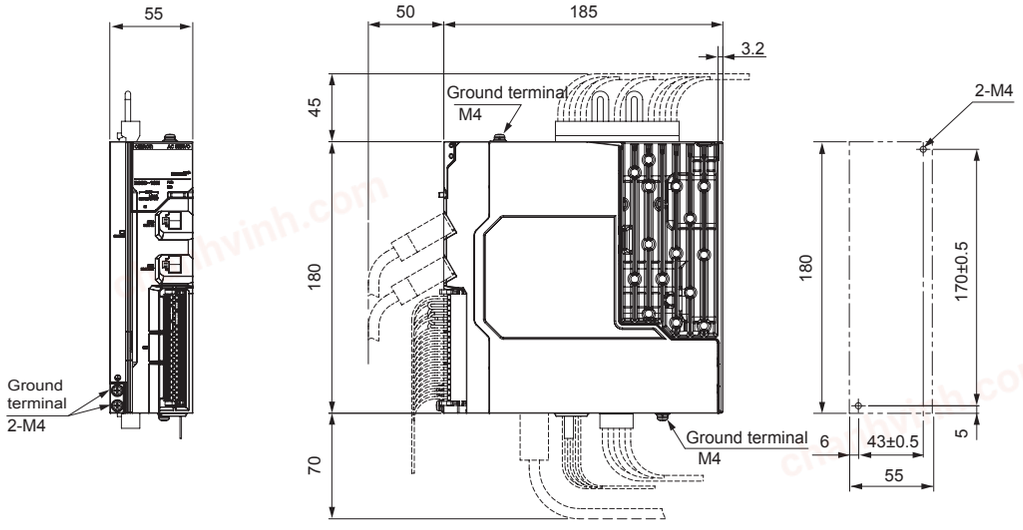

R88D-1SN08H-ECT (230 V, 750 W)

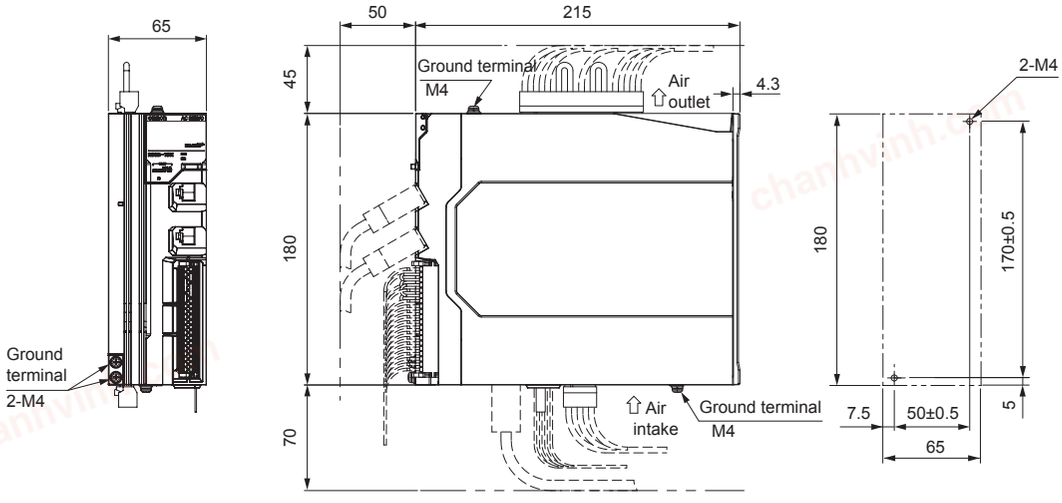

chanhvinh.com

R88D-1SN15H-ECT (230 V, 1.5 kW)

R88D-1SN06F-ECT/10F-ECT/15F-ECT/20F-ECT/30F-ECT (400 V, 600 W to 3 kW)

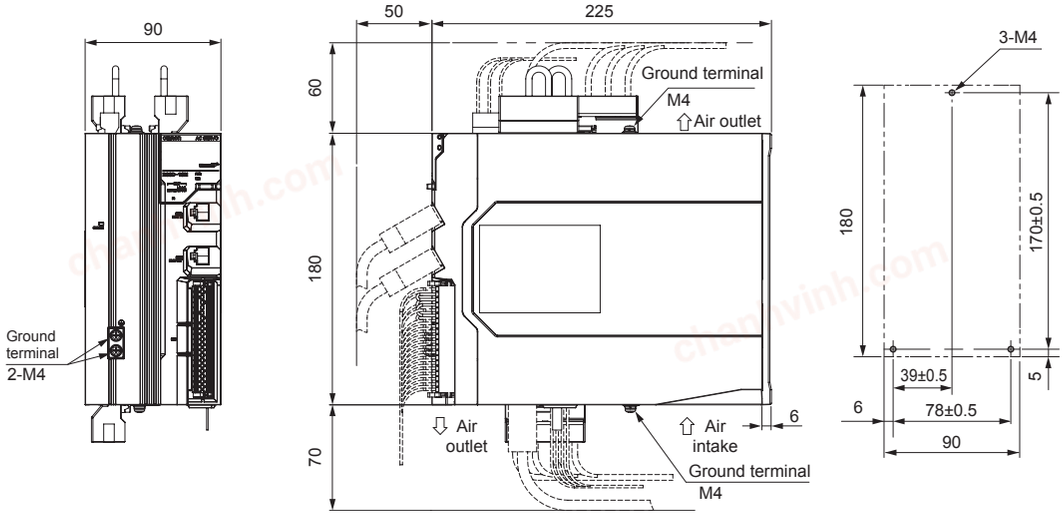

R88D-1SN55F-ECT/75F-ECT (400 V, 5.5 kW to 7.5 kW)

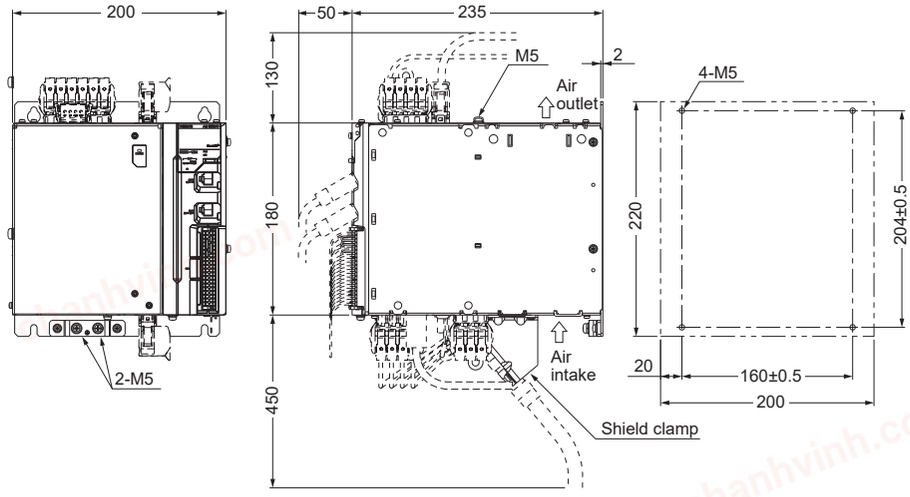

chanhvinh.com

R88D-1SN150F-ECT (400 V, 15 kW)

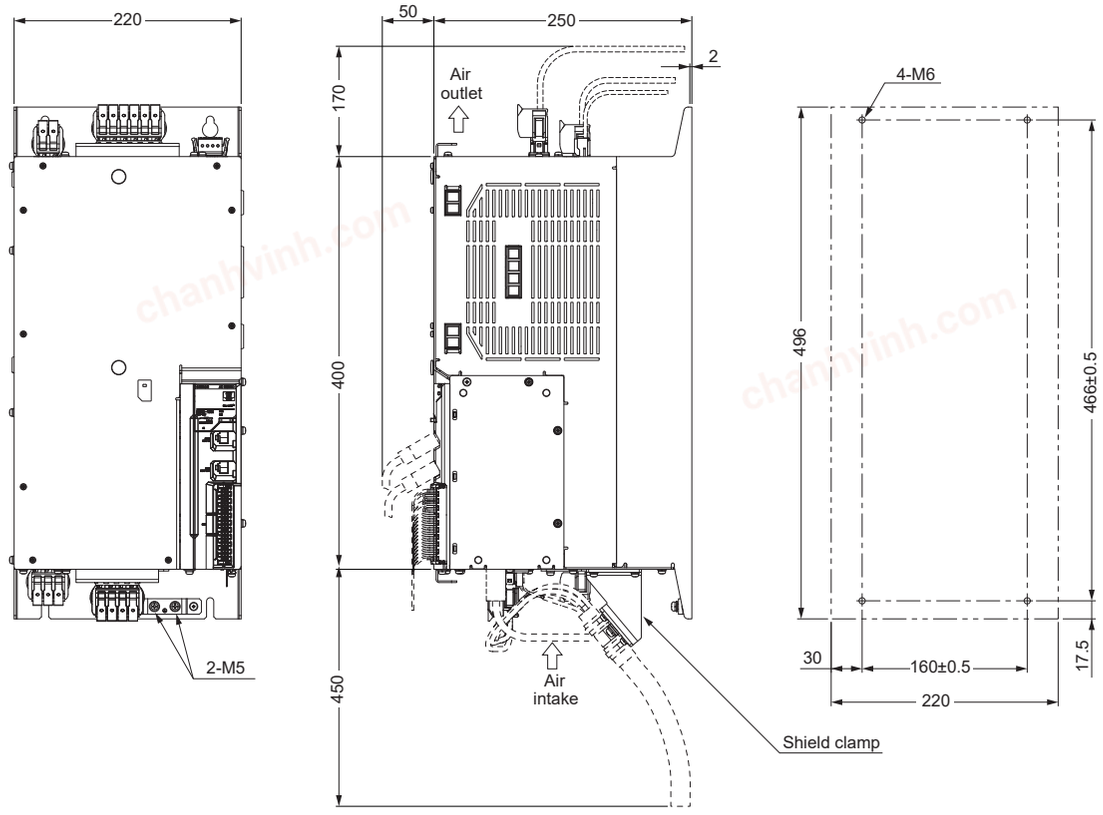

Filters

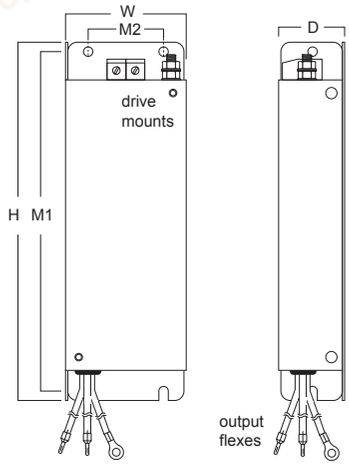

Filter model	External dimensions			Mount dimensions	
	H	W	D	M1	M2
R88A-FI1S103-SE	220	40	35	210	20
R88A-FI1S105-SE		55			30
R88A-FI1S108-SE		65			40
R88A-FI1S116-SE		90	45		60
R88A-FI1S309-SE					
R88A-FI1S330-SE	265	200	52	250	160
R88A-FI1S350-SE	545	220	65	530	180

chanhvinh.com

Installation

Single-phase, 230 VAC (100 W to 750 W models)

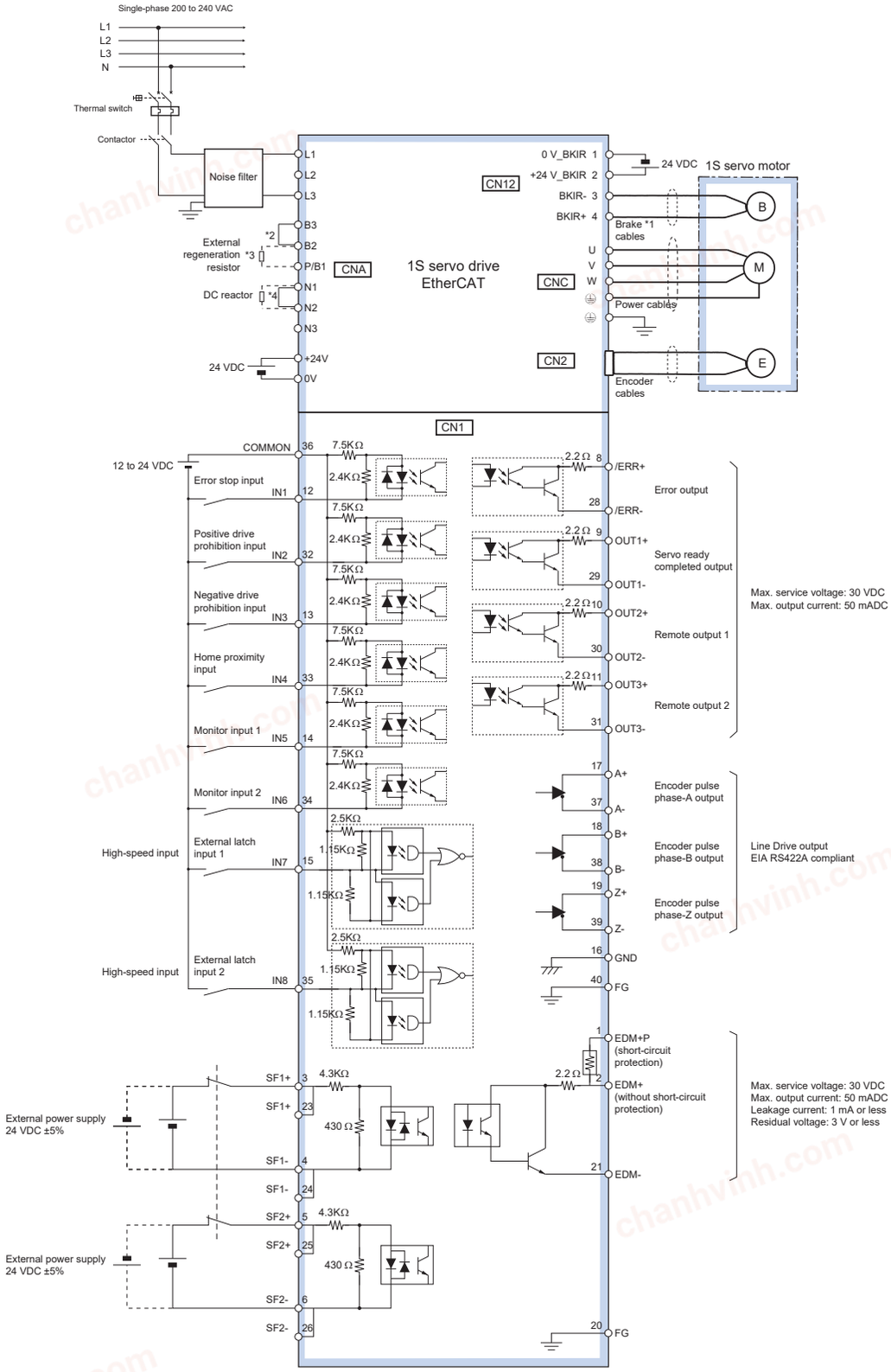

*1. There is no polarity on the brake.
*2. For 750 W servo drive, B2 and B3 are short-circuited. If the internal regenerative resistor is insufficient, remove the wire between B2 and B3 and connect an external regenerative resistor between B1 and B2.
*3. There is no internal regeneration resistor for 100 to 400 W models. When the amount of regeneration is large, connect the necessary regeneration resistor between B1 and B2.
*4. To use a DC reactor, remove the short-circuit wire and connect the DC reactor between N1 and N2.

Note: The input functions of pins 12 to 15 and 32 to 35, and output functions of pins 9 to 11 and 29 to 31, can be changed via parameter settings.

chanhvinh.com

Single-phase, 230 VAC (1.5 kW model)

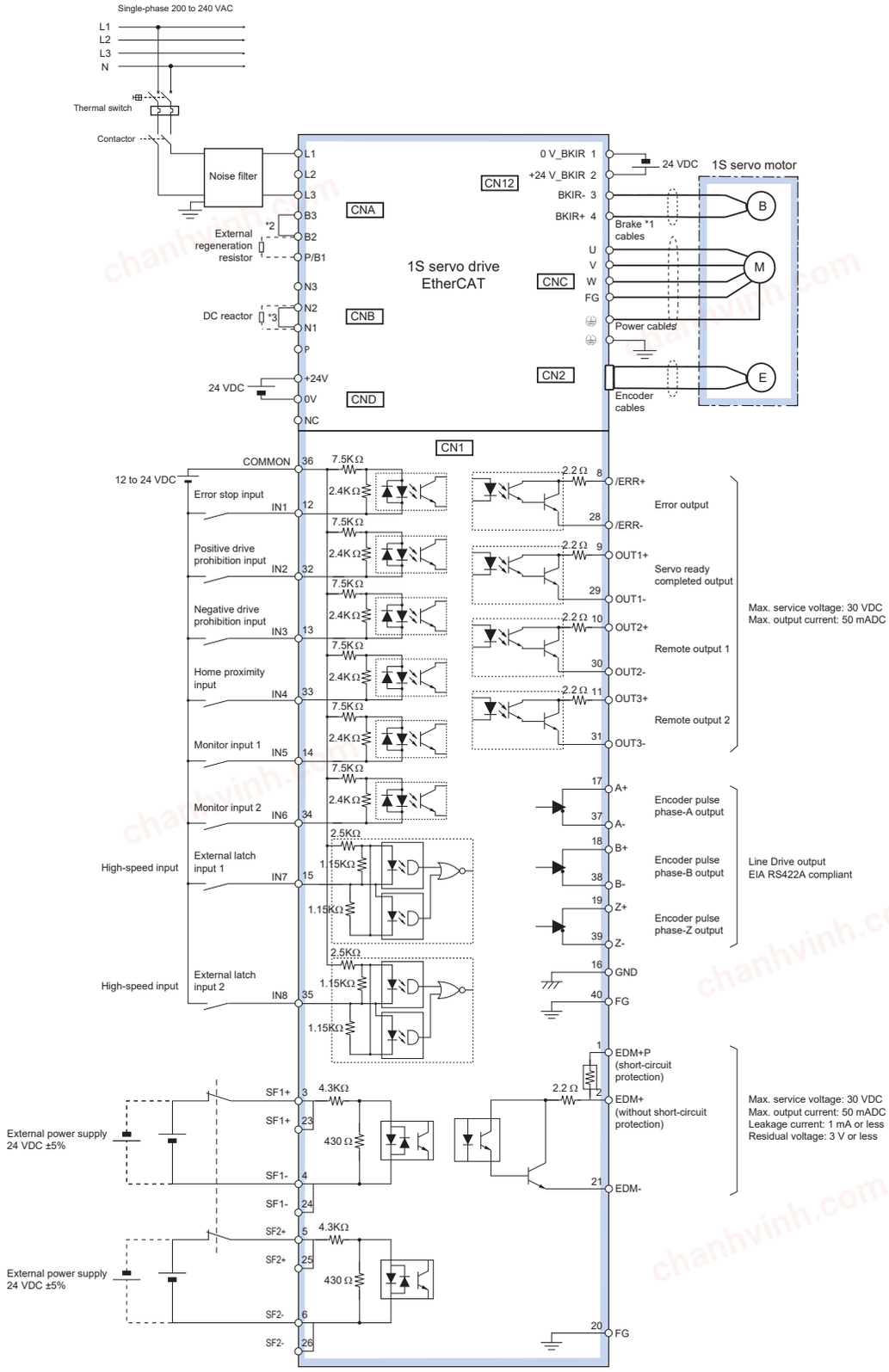

*1. There is no polarity on the brake.
*2. B2 and B3 are short-circuited. If the internal regenerative resistor is insufficient, remove the wire between B2 and B3 and connect an external regenerative resistor between B1 and B2.
*3. To use a DC reactor, remove the short-circuit wire and connect the DC reactor between N1 and N2.

Note: The input functions of pins 12 to 15 and 32 to 35, and output functions of pins 9 to 11 and 29 to 31, can be changed via parameter settings.

chanhvinh.com

Three-phase, 400 VAC (600 W to 3 kW models)

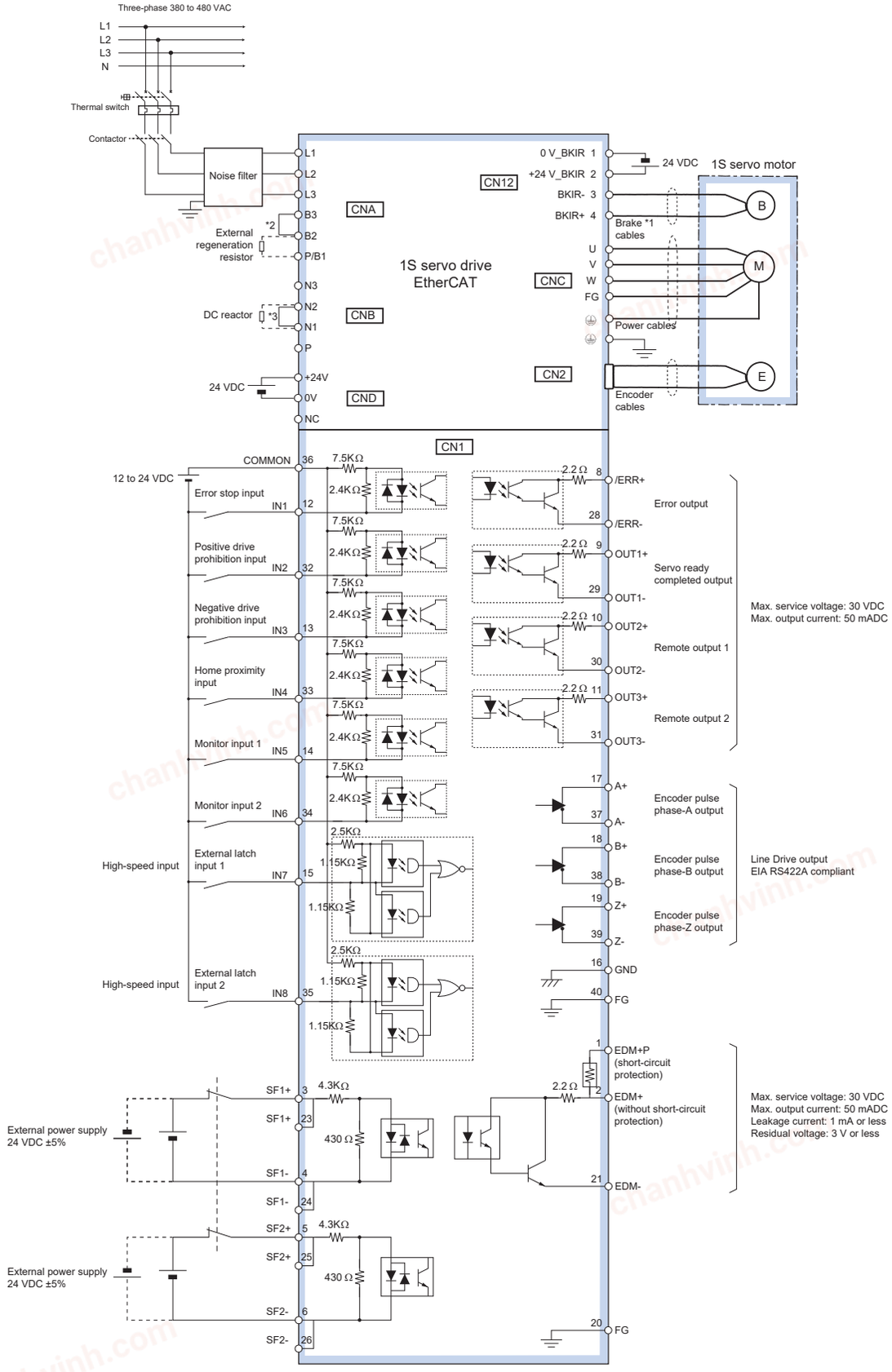

*1. There is no polarity on the brake.
*2. B2 and B3 are short-circuited. If the internal regenerative resistor is insufficient, remove the wire between B2 and B3 and connect an external regenerative resistor between B1 and B2.
*3. To use a DC reactor, remove the short-circuit wire and connect the DC reactor between N1 and N2.

Note: The input functions of pins 12 to 15 and 32 to 35, and output functions of pins 9 to 11 and 29 to 31, can be changed via parameter settings.

chanhvinh.com

Three-phase, 400 VAC (5.5 kW to 7.5 kW models)

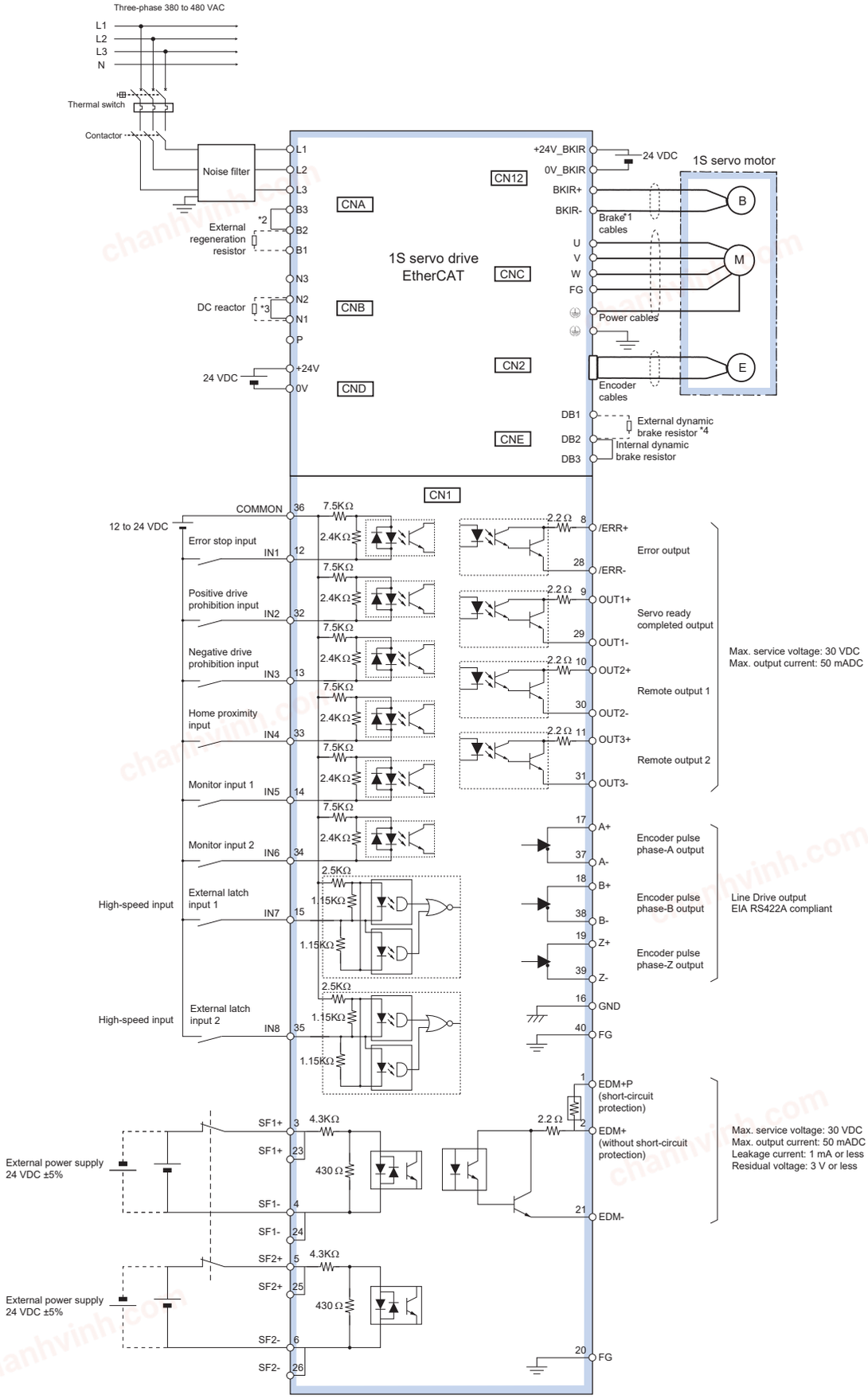

*1. There is no polarity on the brake.
*2. B2 and B3 are short-circuited. If the internal regenerative resistor is insufficient, remove the wire between B2 and B3 and connect an external regenerative resistor between B1 and B2.
*3. To use a DC reactor, remove the short-circuit wire and connect the DC reactor between N1 and N2.
*4. Short-circuit DB2 and DB3 for models with a built-in dynamic brake resistor. When the amount of braking energy is large, remove the short-circuit wire between DB2 and DB3 and connect a dynamic brake resistor between B1 and B2.

chanhvinh.com

Three-phase, 400 VAC (15 kW model)

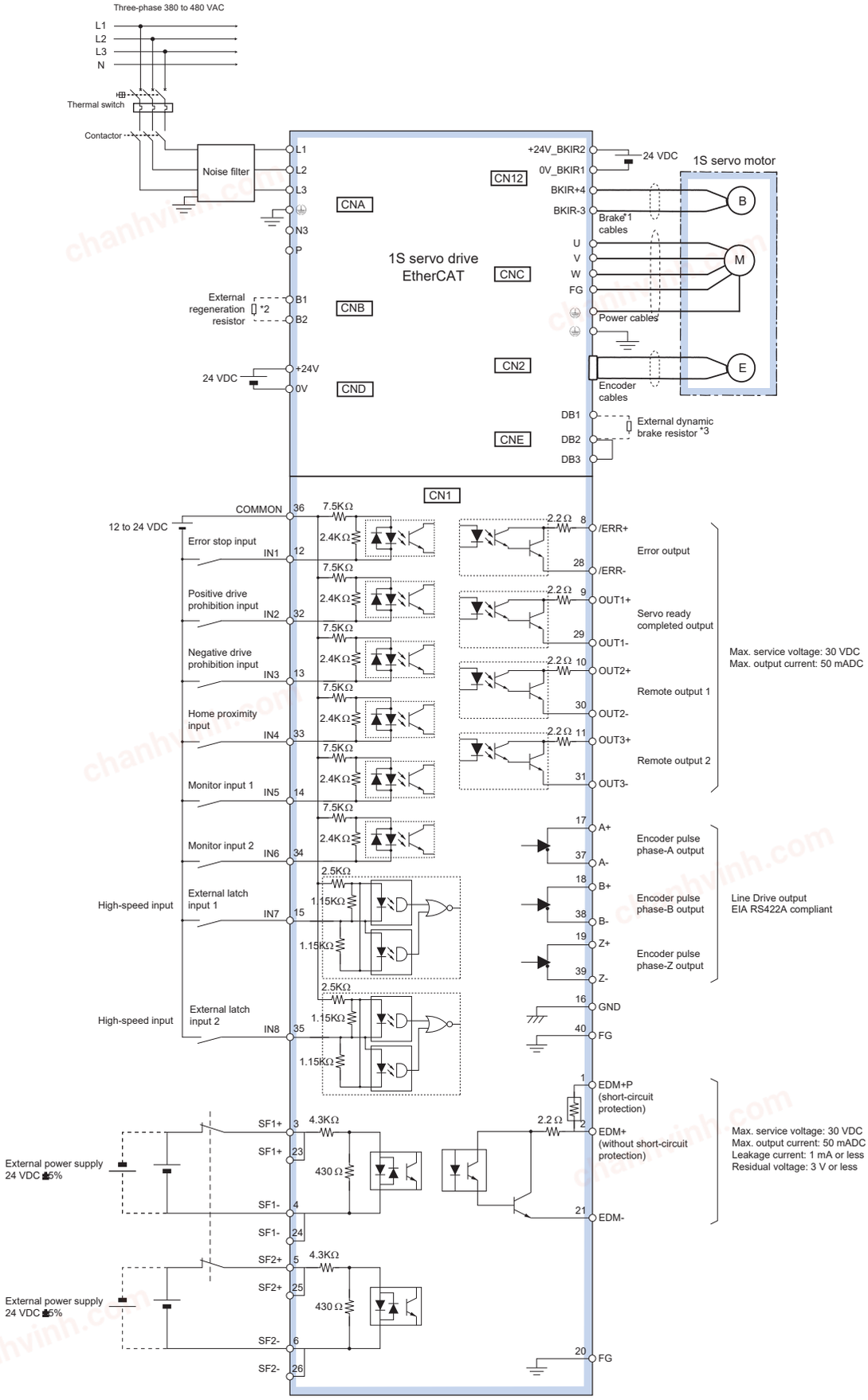

*1. There is no polarity on the brake.
*2. *There is no built-in regeneration resistor. Connect a required regeneration resistor between B1 and B2.
*3. Short-circuit DB2 and DB3 for models with a built-in dynamic brake resistor. When the amount of braking energy is large, remove the short-circuit wire between DB2 and DB3 and connect a dynamic brake resistor between B1 and B2.

chanhvinh.com

OMRON

Ordering information

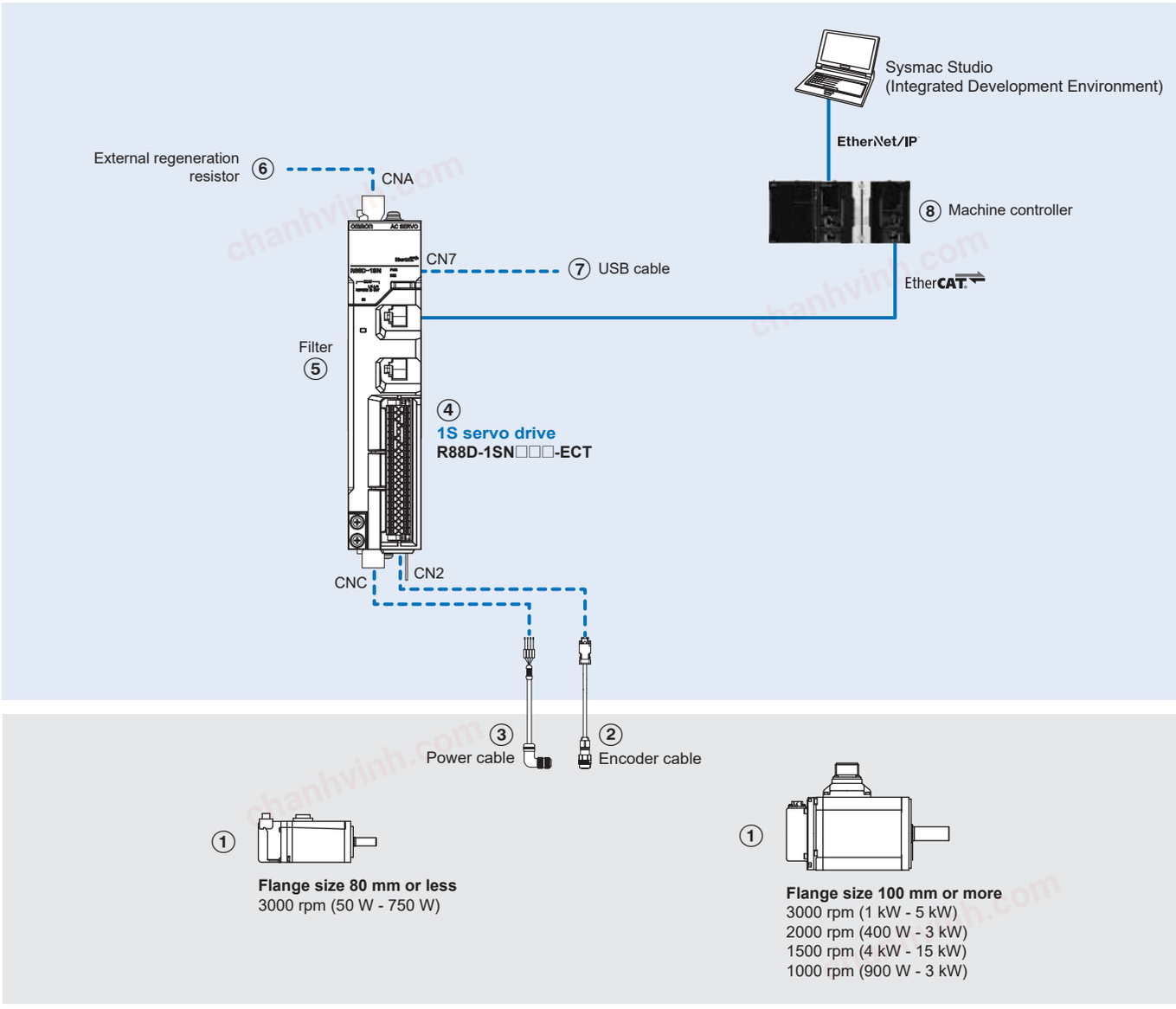

Servo motors, power & encoder cables

①②③ Refer to the 1S servo motor chapter for servo motor, motor cables or connectors selection.

chanhvinh.com

Servo drives

Symbol	Specifications		Compatible 1S servo motor	Model
④	Single-phase 230 VAC	50 W	R88M-1M05030T-□	R88D-1SN01H-ECT
		100 W	R88M-1M10030(H/T)-□	
		200 W	R88M-1M20030(H/T)-□	R88D-1SN02H-ECT
		400 W	R88M-1M40030(H/T)-□	R88D-1SN04H-ECT
		750 W	R88M-1M75030(H/T)-□	R88D-1SN08H-ECT
		1.5 kW	R88M-1L1K030(H/T)-□	R88D-1SN15H-ECT
			R88M-1L1K530(H/T)-□	
			R88M-1M1K020(H/T)-□	
			R88M-1M1K520(H/T)-□	
			R88M-1M90010T-□	
	Three-phase 400 VAC	600 W	R88M-1M40020C-□	R88D-1SN06F-ECT
			R88M-1M60020C-□	
		1 kW	R88M-1L75030C-□	R88D-1SN10F-ECT
			R88M-1L1K030C-□	
			R88M-1M1K020C-□	
			R88M-1M90010C-□	
		1.5 kW	R88M-1L1K530C-□	R88D-1SN15F-ECT
			R88M-1M1K520C-□	
		2 kW	R88M-1L2K030C-□	R88D-1SN20F-ECT
			R88M-1M2K020C-□	
			R88M-1M2K010C-□	
		3 kW	R88M-1L3K030C-□	R88D-1SN30F-ECT
			R88M-1M3K020C-□	
			R88M-1M3K010C-□	
		5.5 kW	R88M-1L4K030C-□	R88D-1SN55F-ECT
			R88M-1M4K015C-□	
			R88M-1L5K030C-□	
			R88M-1M5K515C-□	
		7.5 kW	R88M-1M7K515C-□	R88D-1SN75F-ECT
		15 kW	R88M-1M11K015C-□	R88D-1SN150F-ECT
			R88M-1M15K015C-□	

Filters

Symbol	Applicable 1S servo drive	Manufacturer	Rated current	Leakage current	Rated voltage	Model
⑤	R88D-1SN01H-ECT, R88D-1SN02H-ECT	Schaffner EMC Co. Ltd.	3 A	7.83 mA	250 VAC	R88A-FI1S103-SE
	R88D-1SN04H-ECT		5 A			R88A-FI1S105-SE
	R88D-1SN08H-ECT		8 A			R88A-FI1S108-SE
	R88D-1SN15H-ECT		16 A			R88A-FI1S116-SE
	R88D-1SN06F-ECT, R88D-1SN10F-ECT, R88D-1SN15F-ECT, R88D-1SN20F-ECT, R88D-1SN30F-ECT		9 A	1.2 mA	400 VAC	R88A-FI1S309-SE
	R88D-1SN55F-ECT, R88D-1SN75F-ECT		30 A	0.6 mA		R88A-FI1S330-SE
	R88D-1SN150F-ECT		50 A	2.4 mA		R88A-FI1S350-SE

External regeneration resistor

Symbol	Resistance value	Regeneration absorption for 120°C temperature rise	Nominal capacity	Model
⑥	25 Ω	24 W	120 W	R88A-RR12025
	20 Ω	60 W	300 W	R88A-RR30020
	25 Ω			R88A-RR30025
	33 Ω			R88A-RR30033
	16 Ω			R88A-RR30016
	10 Ω			R88A-RR30010

⑦ USB cable

Use a commercially available USB cable that is double-shielded, gold-plated and supports USB 2.0. The Micro B type USB cable can be used.

Machine controller

Symbol	Name		Model
⑧	Industrial PC	Box PC type	NY512-□
		Panel PC type (Box PC + Monitor integrated)	NY532-□
	Modular controller	NX7 series	NX701-□
		NJ series	NJ□01-□
		NX1 series	NX102-□
	Compact controller	NX1P series	NX1P2-□

chanhvinh.com

OMRON

Servo drive connectors (spare parts)

Applicable servo drive	Specifications	Model
R88D-1SN(01H/02H/04H/08H)-ECT	Main circuit connector (CNA)	R88A-CN102P
	Motor connector (CNC)	R88A-CN101A
R88D-1SN15H-ECT R88D-1SN(06F/10F/15F/20F/30F)-ECT	Main circuit connector A (CNA)	R88A-CN103P
	Main circuit connector B (CNB)	R88A-CN104P
	Motor connector (CNC)	R88A-CN102A
	Control power supply connector (CND)	R88A-CN101P
R88D-1SN(55F/75F)-ECT	Main circuit connector A (CNA)	R88A-CN106P
	Main circuit connector B (CNB)	R88A-CN107P
	Motor connector (CNC)	R88A-CN103A
	Control power supply connector (CND)	R88A-CN105P
	Main circuit connector E (CNE)	R88A-CN101D
R88D-1SN150F-ECT	Main circuit connector B (CNB)	R88A-CN101E
	Motor connector (CNC)	R88A-CN103A
	Control power supply connector (CND)	R88A-CN105P
	Main circuit connector E (CNE)	R88A-CN101D
Common to all models	Control I/O and safety connector (CN1)	R88A-CN101C
	Encoder connector (CN2)	R88A-CN101R
	Brake interlock connector (CN12)	R88A-CN101B

Cable clamp (spare parts)

Applicable 1S power cable	Model
230 V, 100 W to 750 W models	R88A-SC011S-E
230 V, 1.5 kW model 400 V, 600 W to 3 kW models	R88A-SC021S-E
400 V, 5.5 kW to 15 kW models	R88A-SC10CA

Computer software

Specifications	Model
Sysmac Studio version 1.16 or higher	SYSMAC-SE2□□□

ALL DIMENSIONS SHOWN ARE IN MILLIMETERS.
To convert millimeters into inches, multiply by 0.03937. To convert grams into ounces, multiply by 0.03527.

Cat. No. SysCat_I188E-EN-04 In the interest of product improvement, specifications are subject to change without notice.