chanhvinh.com

Advanced Digital Temperature Controller

E5AN-H/E5EN-H

(96 x 96 mm and 48 x 96 mm)

CSM_E5AN-H_E5EN-H_DS_E_3_13

A New High-performance Controller: High Resolution, High Speed, and High Input Accuracy.
Logic Operations and Preventive Maintenance Function. Plus Infrared Port on Front Panel.

- High-resolution display with 5 digits/0.01°C display.
- High-speed sampling cycle of 60 ms.
- High Accuracy
  Thermocouple/Pt input: ±0.1% of PV
  Analog input: ±0.1% FS
- Universal inputs on all models (thermocouple, PT, or analog input) to handle various sensors with one Controller. Models also available with Remote SP.
- A PV/SV-status display function can be set to automatically alternate between displaying the status of the Temperature Controller (auto/manual, RUN/STOP, and alarms) and the PV or SV.
- Flexible contact outputs with logic operations (AND, OR, and delays) set from the Support Software (CX-Thermo Ver. 4.0)
- Preventive maintenance for relays in the Temperature Controller using a Control Output ON/OFF Counter.
- Model available with position-proportional control

⚠ Refer to *Safety Precautions for E5□N/E5□N-H.*

Refer to *Operation for E5□N/E5□N-H* for operating procedures.



96 × 96 mm
E5AN-H

48 × 96 mm
E5EN-H

For the most recent information on models that have been certified fo safety standards, refer to your OMRON website.

E5AN-HSS□-500, E5EN-HSS□-500 in this catalog have been discontinued at the end of March 2018.

Main I/O Functions

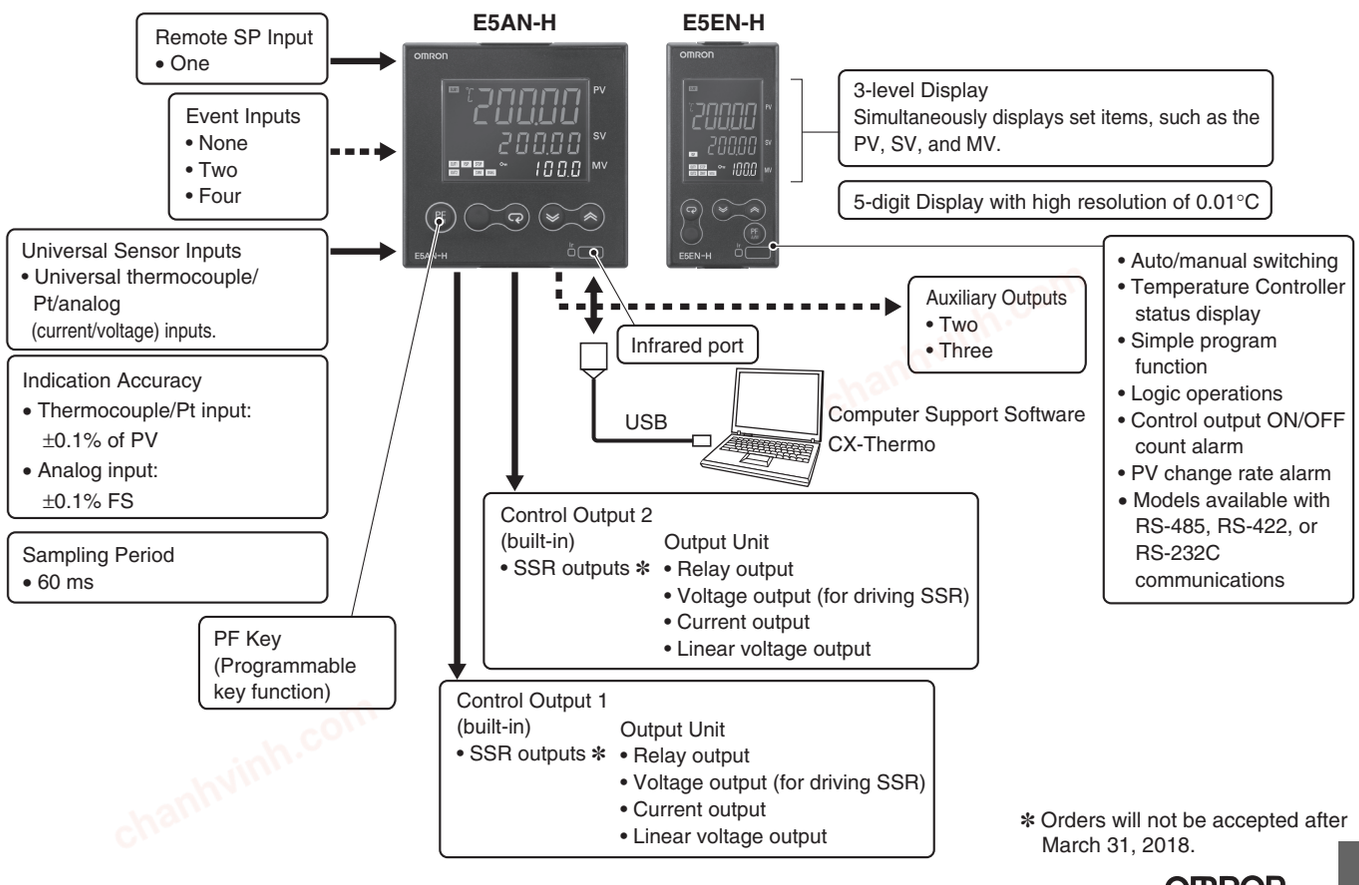

✻ Orders will not be accepted after March 31, 2018.

chanhvinh.com

Lineup



Note: The Controller can be used for heating/cooling control even if only 1 control output is used.

Model Number Structure

Model Number Legend

Controllers

E5AN/E5EN-□□□□□□□M□-□-500
1 2 3 4 5 6 7 8 9 10 11

1. **Type**
   H: Advanced
2. **Control Mode**
   Blank: Standard or heating/cooling control
   P: Position-proportional control
3. **Control Output 1**
   A: Control Output Unit
   R: Relay output
   S: SSR output ✻
4. **Control Output 2**
   A: Control Output Unit
   R: Relay output
   S: SSR output ✻
5. **Auxiliary Outputs**
   2: Two outputs
   3: Three outputs
6. **Option 1**
   Blank: None
   H: Heater burnout/SSR failure/Heater overcurrent detection (CT1)
   HH: Heater burnout/SSR failure/Heater overcurrent detection (CT2)
7. **Option 2**
   B: Two event inputs
   BF: Event input + Transfer output
8. **Option 3**
   M: Option Unit can be mounted.
9. **Power Supply Voltage**
   Blank: 100 to 240 VAC
   D: 24 VAC/VDC
10. **Case Color**
    Blank: Black
    W: Silver
11. **Terminal Cover**
    -500: With Terminal Cover

✻ Orders will not be accepted after March 31, 2018.

Option Units

E53-□
1

1. **Function**
   EN01: RS-232C communications
   EN02: RS-422 communications
   EN03: RS-485 communications
   AKB: Event input

Output Units

E53-□□
1 2

1. **Control Output**
   R: Relay output
   Q: Voltage output (for driving SSR)
   Q3: Voltage output (for driving SSR) + 24 VDC (NPN)
   Q4: Voltage output (for driving SSR) + 24 VDC (PNP)
   C3: Current output + 4 to 20 mA DC
   C3D: Current output + 0 to 20 mA DC
   V34: Linear voltage output + 0 to 10 VDC
   V35: Linear voltage output + 0 to 5 VDC
2. **Version**
   Blank: Available for E5AN-E5EN-H.
   N: Available only for E5AN-H/E5EN-H.

This data sheet is provided as a guideline for selecting products. Be sure to refer to the following user manuals for application precautions and other information required for operation before attempting to use the product.

E5CN-H/E5AN-H/E5EN-H Digital Controllers User's Manual Advanced Type (Cat. No. H157)

E5CN-H/E5AN-H/E5EN-H Digital Controllers Communications Manual Advanced Type (Cat. No. H159)

chanhvinh.com

Ordering Information

E5AN-H

Size	Case color	Power supply voltage	Control method	Auxiliary output	Control output 1/2	Heater burnout	Optional functions			Model
							Event inputs	Transfer output	RSP	
1/4 DIN 96 × 96 × 78 (W × H × D)	Black	100 to 240 VAC	Basic	2	Control Output Unit × 2	1	2		4 to 20-mA input	**E5AN-HAA2HBM-500**
					SSR outputs × 2	1	2		4 to 20-mA input	**E5AN-HSS2HBM-500 ✻**
					Control Output Unit × 2	2	2	4 to 20-mA output	4 to 20-mA input	**E5AN-HAA2HHBFM-500**
					SSR outputs × 2	2	2	4 to 20-mA output	4 to 20-mA input	**E5AN-HSS2HHBFM-500 ✻**
				3	Control Output Unit × 2		2	4 to 20-mA output	4 to 20-mA input	**E5AN-HAA3BFM-500**
					SSR outputs × 2		2	4 to 20-mA output	4 to 20-mA input	**E5AN-HSS3BFM-500 ✻**
			Valve	2	Relay outputs × 2		2		4 to 20-mA input	**E5AN-HPRR2BM-500**
					Relay outputs × 2		2	4 to 20-mA output	4 to 20-mA input	**E5AN-HPRR2BFM-500**
		24 VAC/ VDC	Basic	2	Control Output Unit × 2	1	2		4 to 20-mA input	**E5AN-HAA2HBMD-500**
					SSR outputs × 2	1	2		4 to 20-mA input	**E5AN-HSS2HBMD-500 ✻**
					Control Output Unit × 2	2	2	4 to 20-mA output	4 to 20-mA input	**E5AN-HAA2HHBFMD-500**
					SSR outputs × 2	2	2	4 to 20-mA output	4 to 20-mA input	**E5AN-HSS2HHBFMD-500 ✻**
				3	Control Output Unit × 2		2	4 to 20-mA output	4 to 20-mA input	**E5AN-HAA3BFMD-500**
					SSR outputs × 2		2	4 to 20-mA output	4 to 20-mA input	**E5AN-HSS3BFMD-500 ✻**
			Valve	2	Relay outputs × 2		2		4 to 20-mA input	**E5AN-HPRR2BMD-500**
					Relay outputs × 2		2	4 to 20-mA output	4 to 20-mA input	**E5AN-HPRR2BFMD-500**
	Silver	100 to 240 VAC	Basic	2	Control Output Unit × 2	1	2		4 to 20-mA input	**E5AN-HAA2HBM-W-500**
					Control Output Unit × 2	2	2	4 to 20-mA output	4 to 20-mA input	**E5AN-HAA2HHBFM-W-500**
		24 VAC/ VDC			Control Output Unit × 2	1	2		4 to 20-mA input	**E5AN-HAA2HBMD-W-500**

✻ Orders will not be accepted after March 31, 2018.

chanhvinh.com

E5EN-H

Size	Case color	Power supply voltage	Control method	Auxiliary output	Control output 1/2	Heater burn-out	Optional Functions			Model
							Event inputs	Transfer output	RSP	
1/8 DIN 48 × 96 × 78 (W × H × D)	Black	100 to 240 VAC	Basic	2	Control Output Unit × 2	1	2		4 to 20-mA input	**E5EN-HAA2HBM-500**
					SSR outputs × 2	1	2		4 to 20-mA input	**E5EN-HSS2HBM-500 ✻**
					Control Output Unit × 2	2	2	4 to 20-mA output	4 to 20-mA input	**E5EN-HAA2HHBFM-500**
					SSR outputs × 2	2	2	4 to 20-mA output	4 to 20-mA input	**E5EN-HSS2HHBFM-500 ✻**
				3	Control Output Unit × 2		2	4 to 20-mA output	4 to 20-mA input	**E5EN-HAA3BFM-500**
					SSR outputs × 2		2	4 to 20-mA output	4 to 20-mA input	**E5EN-HSS3BFM-500 ✻**
			Valve	2	Relay outputs × 2		2		4 to 20-mA input	**E5EN-HPRR2BM-500**
					Relay outputs × 2		2	4 to 20-mA output	4 to 20-mA input	**E5EN-HPRR2BFM-500**
		24 VAC/VDC	Basic	2	Control Output Unit × 2	1	2		4 to 20-mA input	**E5EN-HAA2HBMD-500**
					SSR outputs × 2	1	2		4 to 20-mA input	**E5EN-HSS2HBMD-500 ✻**
					Control Output Unit × 2	2	2	4 to 20-mA output	4 to 20-mA input	**E5EN-HAA2HHBFMD-500**
					SSR outputs × 2	2	2	4 to 20-mA output	4 to 20-mA input	**E5EN-HSS2HHBFMD-500 ✻**
				3	Control Output Unit × 2		2	4 to 20-mA output	4 to 20-mA input	**E5EN-HAA3BFMD-500**
					SSR outputs × 2		2	4 to 20-mA output	4 to 20-mA input	**E5EN-HSS3BFMD-500 ✻**
			Valve	2	Relay outputs × 2		2		4 to 20-mA input	**E5EN-HPRR2BMD-500**
					Relay outputs × 2		2	4 to 20-mA output	4 to 20-mA input	**E5EN-HPRR2BFMD-500**
	Silver	100 to 240 VAC	Basic	2	Control Output Unit × 2	1	2		4 to 20-mA input	**E5EN-HAA2HBM-W-500**
					Control Output Unit × 2	2	2	4 to 20-mA output	4 to 20-mA input	**E5EN-HAA2HHBFM-W-500**
		24 VAC/VDC			Control Output Unit × 2	1	2		4 to 20-mA input	**E5EN-HAA2HBMD-W-500**

✻ Orders will not be accepted after March 31, 2018.

Accessories (Order Separately)

Output unit	Model	Specifications
Relay output	E53-RN	SPST-NO, 250 VAC, 5 A (resistive load), electrical life: 100,000 operations
Voltage output (for driving SSR)	E53-QN	12 VDC (PNP), max. load current: 40-mA, with short-circuit protection
	E53-Q3	24 VDC (NPN), max. load current: 20-mA, with short-circuit protection
	E53-Q4	24 VDC (PNP), max. load current: 20-mA, with short-circuit protection
Current output	E53-C3N	4 to 20-mA DC, load: 600 Ω max., resolution: approx. 10,000
	E53-C3DN	0 to 20-mA DC, load: 600 Ω max., resolution: approx. 10,000
Linear voltage output	E53-V34N	0 to 10 VDC, load: 1 kΩ min., resolution: approx. 10,000
	E53-V35N	0 to 5 VDC, load: 1 kΩ min., resolution: approx. 10,000

USB-infrared Conversion Cable

Model
E58-CIFIR

USB-Serial Conversion Cable

Model
E58-CIFQ1

Terminal Cover

Connectable models	Model
E5AN-H	**E53-COV16**
E5EN-H	

Note: The Terminal Cover comes with the E5CN-□□□-500 models.

Mounting Brackets

Model
Y92H-9

Note: These Mounting Brackets are provided with the Digital Controller.

Waterproof Packing

Connectable models	Model
E5AN-H	**Y92S-P4**
E5EN-H	**Y92S-P5**

Note: The Waterproof Packing is included with the Controller.

Current Transformers (CTs)

Hole diameter	Model
5.8 dia.	**E54-CT1**
12.0 dia.	**E54-CT3**

CX-Thermo Support Software

Model
EST2-2C-MV4

chanhvinh.com

Specifications

Ratings

Power supply voltage		No D in model number: 100 to 240 VAC, 50/60 Hz D in model number: 24 VAC, 50/60 Hz; 24 VDC
Operating voltage range		85% to 110% of rated supply voltage
Power consumption		100 to 240 VAC: 12 VA 24 VAC/VDC: 8.5 VA (24 VAC)/5.5 W (24 VDC)
Sensor input		Any of the following can be selected. Thermocouple: K, J, T, E, L, U, N, R, S, B, W, or PL II Platinum resistance thermometer: Pt100 or JPt100 Current input: 4 to 20 mA or 0 to 20 mA Voltage input: 1 to 5 V, 0 to 5 V, or 0 to 10 V
Input impedance		Current input: 150 Ω max., Voltage input: 1 MΩ min. (Use a 1:1 connection when connecting the ES2-HB-N.)
Control method		ON/OFF control or 2-PID control (with auto-tuning)
Control output	**Relay output**	Output Unit (Install the Output Unit (sold separately).)
	Voltage output (for driving SSR)	
	Current output	
	Linear voltage output	
	Relay output for position-proportional control	Relay output: Open and close: SPST-NO, 250 VAC, 1 A (including in-rush current), electrical life: 100,000 operations min. Potentiometer input: Must be between 100 Ω and 2.5 kΩ for maximum open position.
Auxiliary output	**Number of outputs**	2 or 3 max.
	Output specifications	Relay output: SPST-NO, 250 VAC, 3 A (resistive load), electrical life: 100,000 operations, minimum applicable load: 5 V, 10 mA
Event input	**Number of outputs**	2 or 4 (with an E53-AKB)
	External contact input specifications	Contact input: ON: 1 kΩ max., OFF: 100 kΩ min.
		Non-contact input: ON: Residual voltage: 1.5 V max., OFF: Leakage current: 0.1 mA max.
		Current flow: Approx. 7 mA per contact
Logic operations	**Number of operations**	8 max.
	Operations	• Logic operation: Any of the following four patterns can be selected. The input status may be inverted. (A and B) or (C and D), (A or C) and (B or D), A or B or C or D, A and B and C and D (A, B, C, and D are four inputs.) • Delay: ON delay or OFF delay for the results of the logic operation given above. Setting time: 0 to 9999 s or 0 to 9999 min • Output inversion: Possible
	Output	One work bit per operation
	Work bit assignment	Any of The following can be assigned to up to eight work bits (logic operation results): Event input operations, auxiliary outputs, or control outputs.
Transfer outputs	**Number of outputs**	1 max. (Depends on model. Models with transfer output (F in model number)
	Output specifications	Current output: 4 to 20 mA DC, Load: 600 Ω max., Resolution at 4 to 20 mA: Approx. 10,000
RSP input	**Number of inputs**	1
	Signal type	Current input: 4 to 20 mA (input impedance: 150 Ω ±10%)
	Analog input scaling	Scaling of signal to engineering units (EU) −19,999 to 30,000 (display: 30,000 max.)
	Accuracy	(±0.2% of FS) ±1 digit max.
	Input sampling period	60 ms
Setting method		Set digitally using keys on the front panel or by using the RSP input.
Indication method		11-segment digital display and individual indicators (7-segments displays also possible) Character height: E5AN-H: PV: 15.8 mm, SV: 9.5 mm, MV: 6.8 mm; E5EN-H: PV: 11.8 mm, SV: 8.1 mm, MV: 5.8 mm Content of 3-level display: PV/SV/MV, PV/SV/Bank No., or soak time remain Number of digits: 5 for PV and SV, 4 for MV
Bank switching		Supported (number of banks: 8) Local SP, alarm settings, PID sets (PID constants, MV upper limit, MV lower limit, etc.)
Other functions		Manual output, heating/cooling control, loop burnout alarm, SP ramp, other alarm functions, heater burnout detection, 40% AT, 100% AT, MV limiter, input digital filter, self-tuning, temperature input shift, run/stop, protection functions, control output ON/OFF counter, extraction of square root, MV change rate limit, PV/SV status display, logic operations, automatic cooling coefficient adjustment
Ambient operating temperature		−10 to 55°C (with no condensation or icing), for 3-year warranty: −10 to 50°C
Ambient operating humidity		25% to 85%
Storage temperature		−25 to 65°C (with no condensation or icing)

chanhvinh.com

Input Ranges

Thermocouple/Platinum Resistance Thermometer (Fully Universal Inputs)

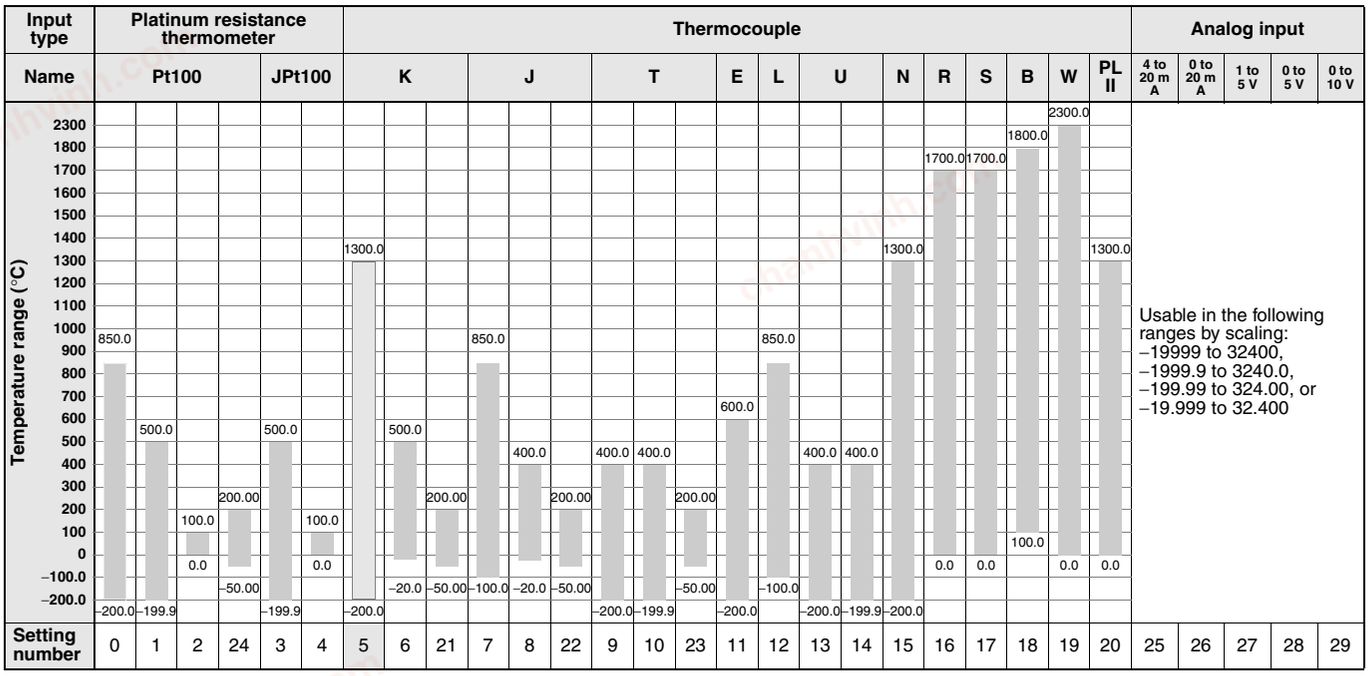

Input type	Platinum resistance thermometer						Thermocouple																		Analog input				
Name	Pt100				JPt100		K			J			T			E	L	U		N	R	S	B	W	PL II	4 to 20 mA	0 to 20 mA	1 to 5 V	0 to 5 V	0 to 10 V
Setting number	0	1	2	24	3	4	5	6	21	7	8	22	9	10	23	11	12	13	14	15	16	17	18	19	20	25	26	27	28	29

Shaded settings are the default settings.

The applicable standards for the input types are as follows:

K, J, T, E, N, R, S, B: JIS C 1602-1995, IEC 584-1

L: Fe-CuNi, DIN 43710-1985

U: Cu-CuNi, DIN 43710-1985

W: W5Re/W26Re, ASTM E988-1990

JPt100: JIS C 1604-1989, JIS C 1606-1989

Pt100: JIS C 1604-1997, IEC 751

PL II: According to Platinel II electromotive force charts from BASF (previously Engelhard)

chanhvinh.com

Alarm Outputs

Each alarm can be independently set to one of the following 13 alarm types. The default is *2: Upper limit*.
Auxiliary outputs are allocated for alarms. ON delays and OFF delays (0 to 999 s) can also be specified.

Note: For models with heater burnout, SSR failure, and heater overcurrent detection, alarm 1 will be an OR output of the alarm selected from the following alarm types and the alarms for heater burnout, SSR failure, and heater overcurrent. To output only a heater burnout alarm, SSR failure alarm, and heater overcurrent alarm for alarm 1, set the alarm type to 0 (i.e., no alarm function).

Set value	Alarm type	Alarm output operation		Description of function
		When alarm value X is positive	When alarm value X is negative	
0	Alarm function OFF	Output OFF		No alarm
1	Upper- and lower-limit ✻1		✻2	Set the deviation in the set point by setting the alarm upper limit (H) and alarm lower limit (L).
2	Upper-limit	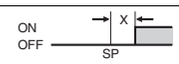		Set the upward deviation in the set point by setting the alarm value (X).
3	Lower-limit	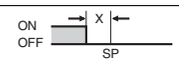		Set the downward deviation in the set point by setting the alarm value (X).
4	Upper- and lower-limit range ✻1	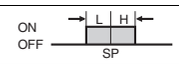	✻3	Set the deviation in the set point by setting the alarm upper limit (H) and alarm lower limit (L).
5	Upper- and lower-limit with standby sequence ✻1	 ✻5	✻4	A standby sequence is added to the upper- and lower-limit alarm (1). ✻7
6	Upper-limit with standby sequence	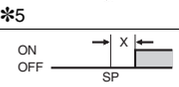		A standby sequence is added to the upper-limit alarm (2). ✻7
7	Lower-limit with standby sequence	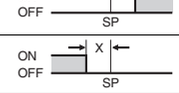	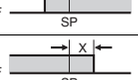	A standby sequence is added to the lower-limit alarm (3). ✻7
8	Absolute-value upper-limit		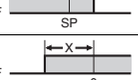	The alarm will turn ON if the process value is larger than the alarm value (X) regardless of the set point.
9	Absolute-value lower-limit	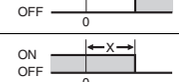	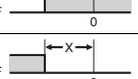	The alarm will turn ON if the process value is smaller than the alarm value (X) regardless of the set point.
10	Absolute-value upper-limit with standby sequence	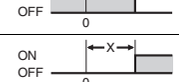	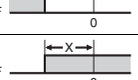	A standby sequence is added to the absolute-value upper-limit alarm (8). ✻7
11	Absolute-value lower-limit with standby sequence	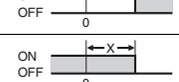		A standby sequence is added to the absolute-value lower-limit alarm (9). ✻7
12	LBA (alarm 1 type only)	---		✻8
13	PV change rate alarm	---		✻9
14	RSP absolute value upper limit ✻6	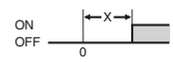	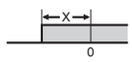	The alarm turns ON when the remote SP (RSP) is larger than the alarm value (X). This alarm functions in both Local SP and Remote SP Modes.
15	RSP absolute value lower limit ✻6	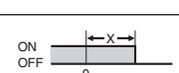		The alarm turns ON when the remote SP (RSP) is smaller than the alarm value (X). This alarm functions in both Local SP and Remote SP Modes.

✻1. With set values 1, 4 and 5, the upper and lower limit values can be set independently for each alarm type, and are expressed as "L" and "H."

✻2. Set value: 1, Upper- and lower-limit alarm

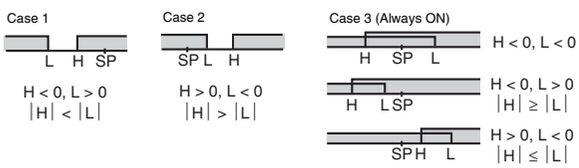

✻3. Set value: 4, Upper- and lower-limit range

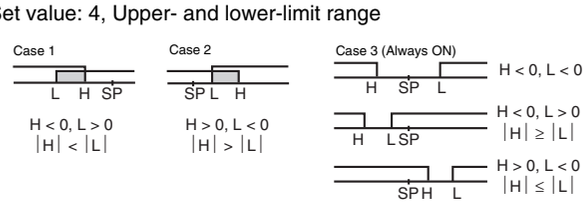

✻4. Set value: 5, Upper- and lower-limit with standby sequence
For Upper- and Lower-Limit Alarm Described Above

- Case 1 and 2
  Always OFF when the upper-limit and lower-limit hysteresis overlaps.
- Case 3: Always OFF

✻5. Set value: 5, Upper- and lower-limit with standby sequence
Always OFF when the upper-limit and lower-limit hysteresis overlaps.

✻6. Displayed when there is a remote SP input.

✻7. Refer to the *E5CN/E5AN/E5EN/E5GN Digital Temperature Controllers User's Manual Basic Type* (Cat. No. H156) for information on the operation of the standby sequence.

✻8. Refer to the *E5CN/E5AN/E5EN/E5GN Digital Temperature Controllers User's Manual Basic Type* (Cat. No. H156) for information on the loop burnout alarm (LBA).

✻9. Refer to the *E5CN/E5AN/E5EN/E5GN Digital Temperature Controllers User's Manual Basic Type* (Cat. No. H156) for information on the PV change rate alarm.

chanhvinh.com

Characteristics

Indication accuracy		Thermocouple: (±0.1% of indicated value or ±1°C, whichever is greater) ±1 digit max. ✻1 Platinum resistance thermometer: (±0.1% of indicated value or ±0.5°C, whichever is greater) ±1 digit max. Analog input: ±0.1% FS ±1 digit max. CT input: ±5% FS ±1 digit max. Potentiometer input: ±5% FS ±1 digit max.
Transfer output accuracy		±0.3% FS max.
Influence of temperature ✻2		Thermocouple input (R, S, B, W, PL II): (±1% of PV or ±10°C, whichever is greater) ±1 digit max. Other thermocouple input: (±1% of PV or ±4°C, whichever is greater) ±1 digit max. ✻3 Platinum resistance thermometer: (±1% of PV or ±2°C, whichever is greater) ±1 digit max. Analog input: (±1%FS) ±1 digit max.
Influence of voltage ✻2		
Influence of EMS. (at EN 61326-1)		
Input sampling period		60 ms
Hysteresis		Temperature input: 0.1 to 3240.0°C or °F (in units of 0.1°C or °F) Analog input: 0.01% to 99.99% FS (in units of 0.01% FS)
Proportional band (P)		Temperature input: 0.1 to 3240.0°C or °F (in units of 0.1°C or °F) Analog input: 0.1% to 999.9% FS (in units of 0.1% FS)
Integral time (I)		0.0 to 3240.0 s (in units of 0.1 s)
Derivative time (D)		0.0 to 3240.0 s (in units of 0.1 s)
Control period		0.5, 1 to 99 s (in units of 1 s)
Manual reset value		0.0 to 100.0% (in units of 0.1%)
Alarm setting range		−19999 to 32400 (decimal point position depends on input type)
Affect of signal source resistance		Thermocouple: 0.1°C/Ω max. (100 Ω max.) Platinum resistance thermometer: 0.1°C/Ω max. (10 Ω max.)
Insulation resistance		20 MΩ min. (at 500 VDC)
Dielectric strength		2,300 VAC, 50 or 60 Hz for 1 min (between terminals with different charge)
Vibration resistance	**Malfunction**	10 to 55 Hz, 20 m/s^2 for 10 min each in X, Y, and Z directions
	Destruction	10 to 55 Hz, 0.75-mm single amplitude for 2 hrs each in X, Y, and Z directions
Shock resistance	**Malfunction**	100 m/s^2, 3 times each in X, Y, and Z directions
	Destruction	300 m/s^2, 3 times each in X, Y, and Z directions
Weight	**E5AN-H**	Controller: Approx. 310 g, Mounting Bracket: Approx. 100 g
	E5EN-H	Controller: Approx. 260 g, Mounting Bracket: Approx. 100 g
Degree of protection		Front panel: IP66, Rear case: IP20, Terminals: IP00
Memory protection		Non-volatile memory (number of writes: 1,000,000 times)
Setup Tool		CX-Thermo version 4.0 or higher
Setup Tool port		Provided on the bottom of the E5AN-H and E5EN-H. An E58-CIFQ1 USB-Serial Conversion Cable is required to connect the computer to the E5AN-H and E5EN-H. Provided on the front of the E5AN-H and E5EN-H. An E58-CIFIR USB-infrared Conversion Cable is required to connect the computer to the E5AN-H or E5EN-H. ✻4
Standards	**Approved standards**	UL 61010-1, CSA C22.2 No. 1010-1
	Conformed standards	EN 61010-1 (IEC 61010-1): Pollution level 2, overcurrent category II, Lloyd's standards ✻5
EMC		EMI: EN 61326-1 ✻6 Radiated Interference Electromagnetic Field Strength: EN 55011 Group 1, class A Noise Terminal Voltage: EN 55011 Group 1, class A EMS: EN 61326-1 ✻6 ESD Immunity: EN 61000-4-2 Electromagnetic Field Immunity: EN 61000-4-3 Burst Noise Immunity: EN 61000-4-4 Conducted Disturbance Immunity: EN 61000-4-6 Surge Immunity: EN 61000-4-5 Power Frequency Magnetic Field Immunity: EN 61000-4-8 Voltage Dip/Interrupting Immunity: EN 61000-4-11

✻1. The indication accuracy of K thermocouples in the −200 to 1300°C range, T and N thermocouples at a temperature of −100°C max., and U and L thermocouples at any temperatures is ±2°C ±1 digit max. The indication accuracy of the B thermocouple at a temperature of 400°C max. is not specified. The indication accuracy of B thermocouples in the 400 to 800°C range is ±3°C max. The indication accuracy of the R and S thermocouples at a temperature of 200°C max. is ±3°C ±1 digit max. The indication accuracy of W thermocouples is ±0.3% of PV or ±3°C, whichever is greater, ±1 digit max.
The indication accuracy of PL II thermocouples is ±0.3% of PV or ±2°C, whichever is greater, ±1 digit max.
✻2. Ambient temperature: −10°C to 23°C to 55°C, Voltage range: −15% to 10% of rated voltage
✻3. K thermocouple at −100°C max.: ±10°C max.
✻4. External communications (RS-232C, RS-485, or RS-422) and cable communications for the Setup Tool can be used at the same time.
✻5. Refer to information on maritime standards in *Safety Precautions for E5□N/E5□N-H* for compliance with Lloyd's Standards.
✻6. Industrial electromagnetic environment (EN/IEC 61326-1 Table 2)

chanhvinh.com

USB-Serial Conversion Cable

Applicable OS	Windows XP/Vista/7/8
Applicable software	CX-Thermo version 4 or higher
Applicable models	E5AN/E5EN/E5CN/E5CN-U/ E5AN-H/E5EN-H/E5CN-H
USB interface standard	Conforms to USB Specification 1.1.
DTE speed	38400 bps
Connector specifications	Computer: USB (type A plug) Temperature Controller: Setup Tool port (on bottom of Controller)
Power supply	Bus power (Supplied from USB host controller.)
Power supply voltage	5 VDC
Current consumption	70 mA
Ambient operating temperature	0 to 55°C (with no condensation or icing)
Ambient operating humidity	10% to 80%
Storage temperature	–20 to 60°C (with no condensation or icing)
Storage humidity	10% to 80%
Altitude	2,000 m max.
Weight	Approx. 100 g

Note: A driver must be installed in the personal computer. Refer to installation information in the operation manual for the Conversion Cable.

Communications Specifications

Transmission line connection method	RS-485, RS-422: Multipoint RS-232C: Point-to-point
Communications	RS-485 (two-wire, half duplex) RS-422 (four-wire, half duplex) or RS-232C
Synchronization method	Start-stop synchronization
Protocol	CompoWay/F, SYSWAY, or Modbus
Baud rate	1200, 2400, 4800, 9600, 19200, 38400, or 57600 bps
Transmission code	ASCII (CompoWay/F, SYSWAY) RTU (Modbus)
Data bit length ✻	7 or 8 bits
Stop bit length ✻	1 or 2 bits
Error detection	Vertical parity (none, even, odd) Frame check sequence (FCS) with SYSWAY Block check character (BCC) with CompoWay/F or CRC-16 Modbus
Flow control	None
Interface	RS-485, RS-422, or RS-232C
Retry function	None
Communications buffer	217 bytes
Communications response wait time	0 to 99 ms Default: 20 ms

✻ The baud rate, data bit length, stop bit length, and vertical parity can be individually set using the Communications Setting Level.

Current Transformer (Order Separately) Ratings

Dielectric strength	1,000 VAC for 1 min
Vibration resistance	50 Hz, 98 m/s^2
Weight	E54-CT1: Approx. 11.5 g, E54-CT3: Approx. 50 g
Accessories (E54-CT3 only)	Armatures (2) Plugs (2)

USB-Infrared Conversion Cable

Applicable OS	Windows XP/Vista/7/8
Applicable software	CX-Thermo version 4.0 or higher
Applicable models	E5AN-H/E5EN-H
USB interface standard	Conforms to USB Specification 1.1.
DTE speed	38400 bps
Connector specifications	Computer: USB (type A plug) Temperature Controller: Infrared port (on front of Controller)
Power supply	Bus power (Supplied from USB host controller.)
Power supply voltage	5 VDC
Current consumption	80 mA
Ambient operating temperature	0 to 55°C (with no condensation or icing)
Ambient operating humidity	10% to 80%
Storage temperature	–20 to 60°C (with no condensation or icing)
Storage humidity	10% to 80%
Altitude	2,000 m max.
Weight	Approx. 130 g (with mounting adaptor)

Note: A driver must be installed in the personal computer. Refer to installation information in the operation manual for the Conversion Cable.

Heater Burnout Alarms, SSR Failure Alarms, and Heater Overcurrent Alarms

CT input (for heater current detection)	Models with detection for single-phase heaters: One input Models with detection for single-phase or three-phase heaters: Two inputs
Maximum heater current	50 A AC
Input current indication accuracy	±5% FS ±1 digit max.
Heater burnout alarm setting range ✻1	0.1 to 49.9 A (in units of 0.1 A) Minimum detection ON time: 100 ms
SSR failure alarm setting range ✻2	0.1 to 49.9 A (in units of 0.1 A) Minimum detection OFF time: 100 ms
Heater overcurrent alarm setting range ✻3	0.1 to 49.9 A (in units of 0.1 A) Minimum detection ON time: 100 ms

✻1. For heater burnout alarms, the heater current will be measured when the control output is ON, and the output assigned to the alarm 1 function will turn ON if the heater current is lower than the set value (i.e., heater burnout detection current value).

✻2. For SSR failure alarms, the heater current will be measured when the control output is OFF, and the output assigned to the alarm 1 function will turn ON if the heater current is higher than the set value (i.e., SSR failure detection current value).

✻3. For heater overcurrent alarms, the heater current will be measured when the control output is ON, and the output assigned to the alarm 1 function will turn ON if the heater current is higher than the set value (i.e., heater overcurrent detection current value).

chanhvinh.com

Electrical Life Expectancy Curve for Relays (Reference Values)

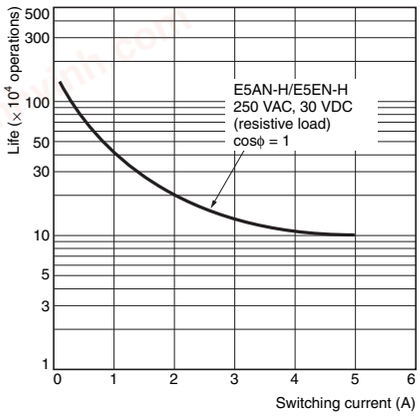

chanhvinh.com

External Connections

Control output 1 and control output 2 are functionally isolated from the internal circuits.

Controllers

The Temperature Controller is set for a K-type thermocouple (input type = 5) by default. An input error (5.ERR) will occur if the input type setting does not agree with the temperature sensor. Check the input type.

- 100 to 240 VAC
- 24 VAC/VDC (no polarity)

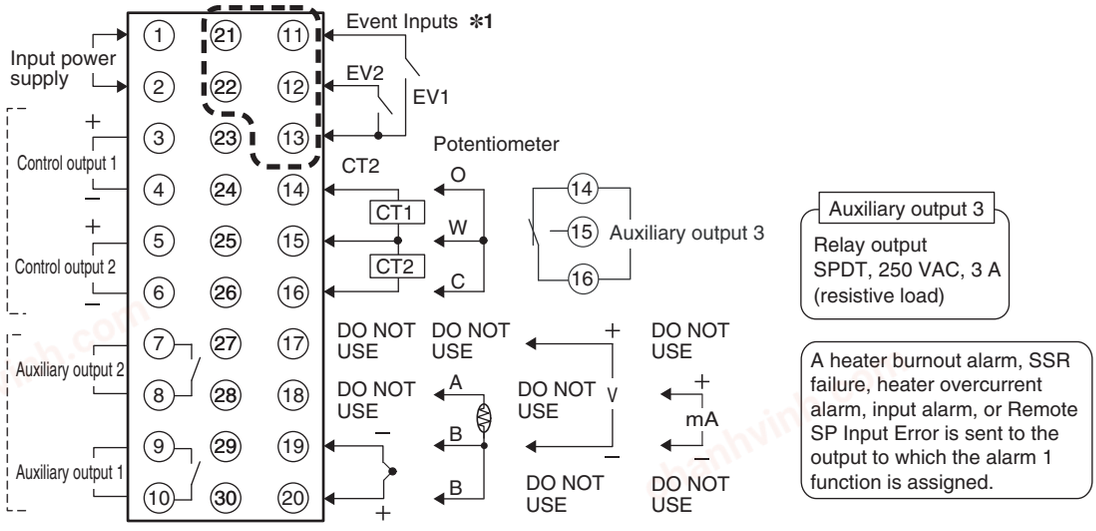

Auxiliary output 3
Relay output
SPDT, 250 VAC, 3 A
(resistive load)

A heater burnout alarm, SSR failure, heater overcurrent alarm, input alarm, or Remote SP Input Error is sent to the output to which the alarm 1 function is assigned.

Control outputs 1, 2
Control Output Unit
Control outputs 1, 2
Refer to page 4
SSR Outputs ✻3
75 to 250 VAC, 1 A
(resistive load)
Models with Position-proportional Control
Relay output
250 VAC, 1 A
(including inrush current)

Auxiliary outputs 1, 2, 3
Relay output
SPST-NO,
250 VAC, 3 A
(resistive load)

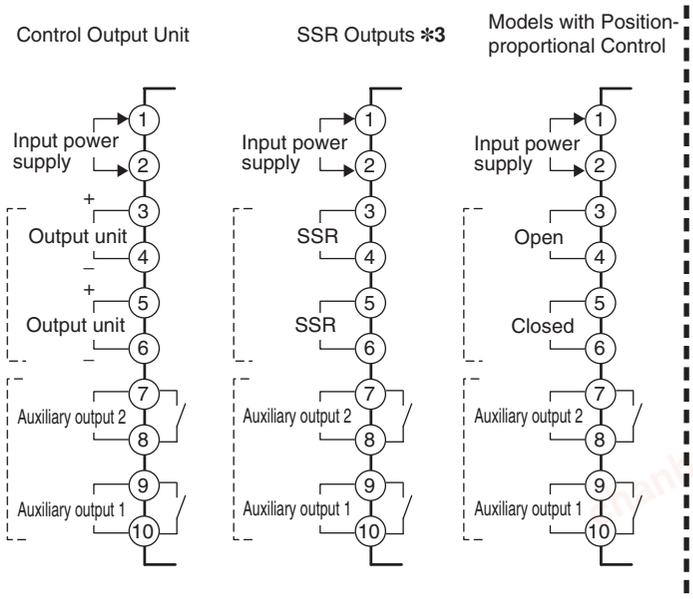

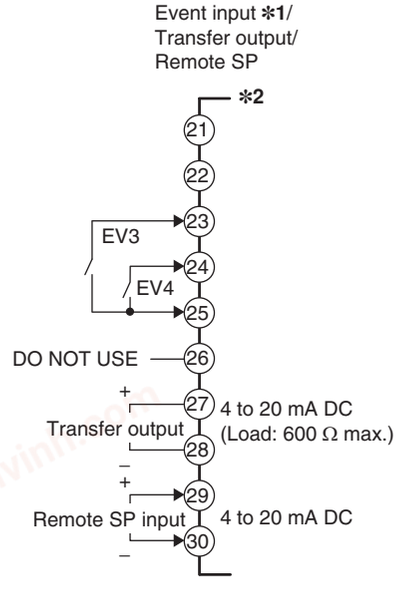

Option Units

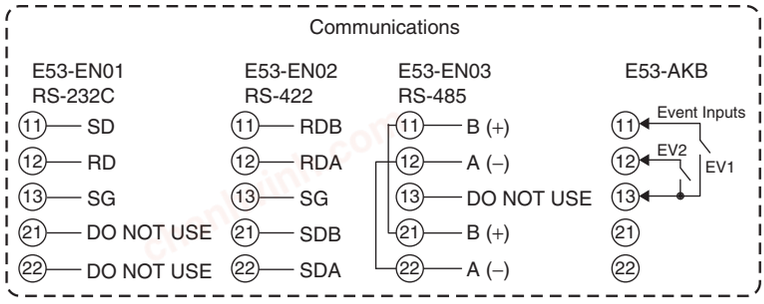

Note: Wire all voltage input terminals correctly. The Controller may fail if voltage input terminals are wired incorrectly.

✻1. EV3 and EV4 are assigned to event inputs in controllers with two event inputs.

✻2. Terminals 21 to 30 exist only on the following models.
- Models with four event inputs (E5□N-□BB□)
- Models with a transfer output (E5□N-□F□)

✻3. Orders will not be accepted after March 31, 2018.

chanhvinh.com

Isolation/Insulation Block Diagrams

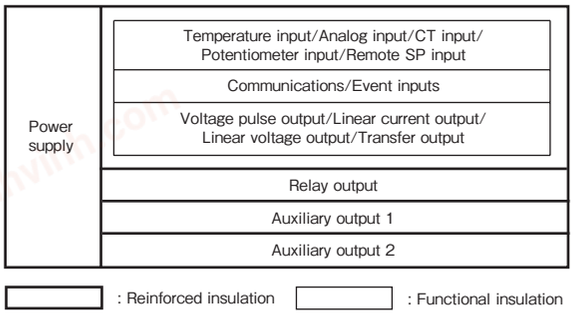

Nomenclature

E5AN-H

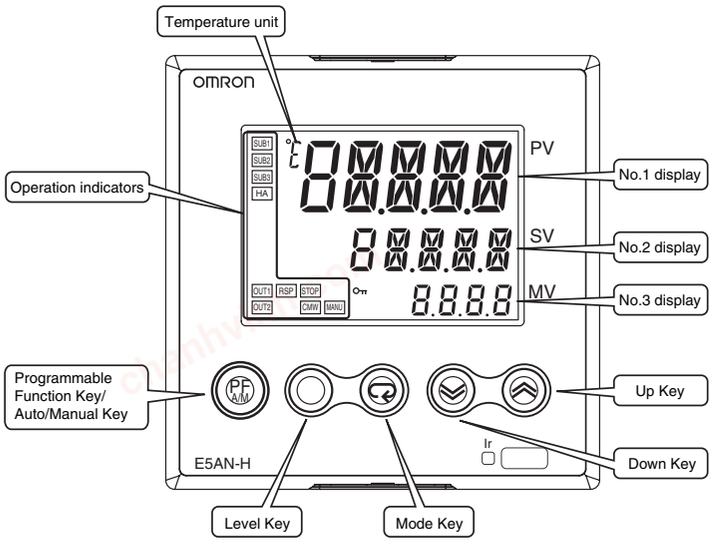

E5EN-H

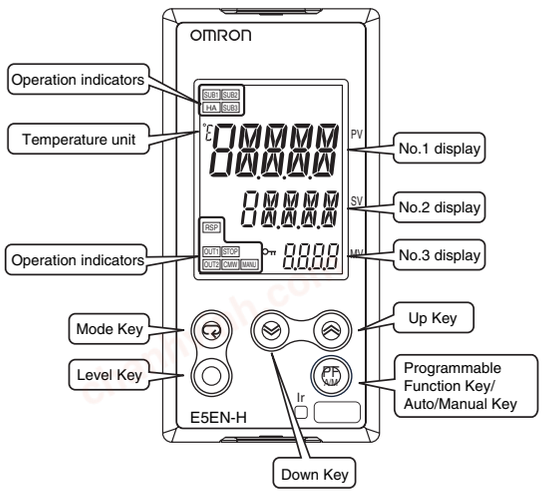

chanhvinh.com

Dimensions

(Unit: mm)

E5AN-H



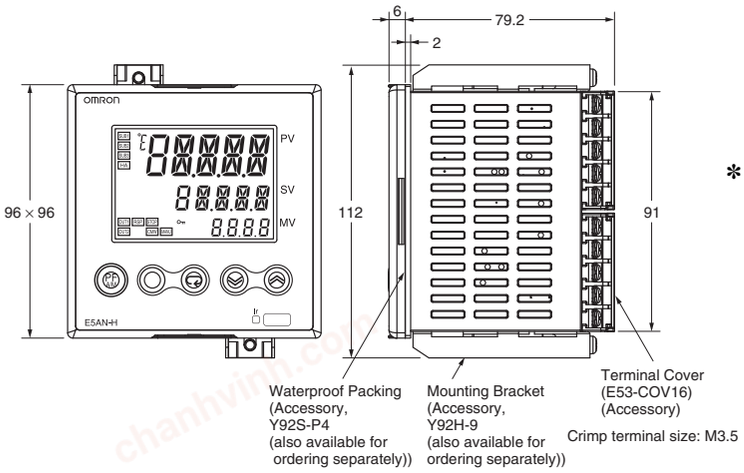

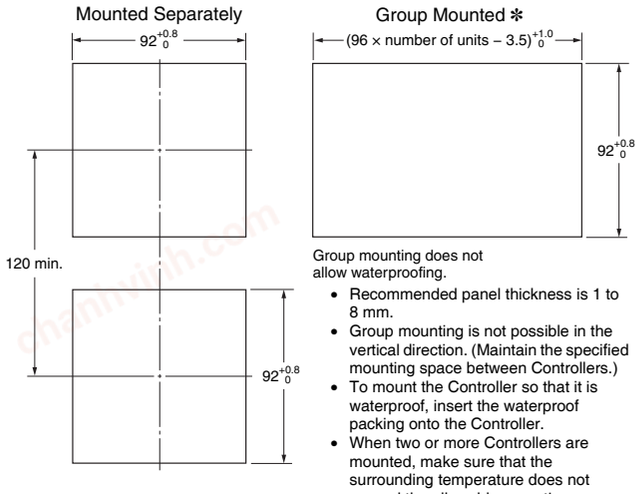

Group mounting does not allow waterproofing.

- Recommended panel thickness is 1 to 8 mm.
- Group mounting is not possible in the vertical direction. (Maintain the specified mounting space between Controllers.)
- To mount the Controller so that it is waterproof, insert the waterproof packing onto the Controller.
- When two or more Controllers are mounted, make sure that the surrounding temperature does not exceed the allowable operating temperature specified in the specifications.

✻ Group mounting is not possible if an SSR output is used for control output 1 or 2 and the E53-C3N or E53-C3DN Output Unit is used. For these combinations, maintain the following mounting space between Controllers.

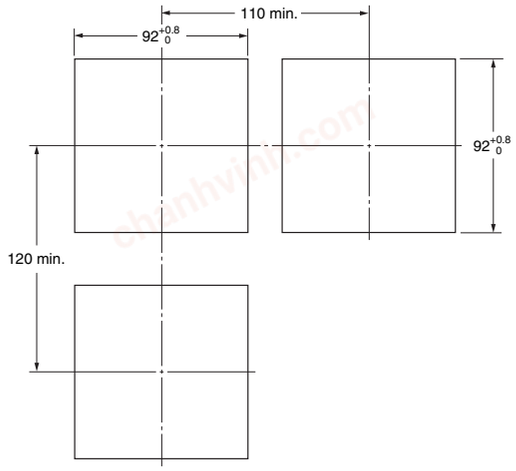

chanhvinh.com

E5EN-H



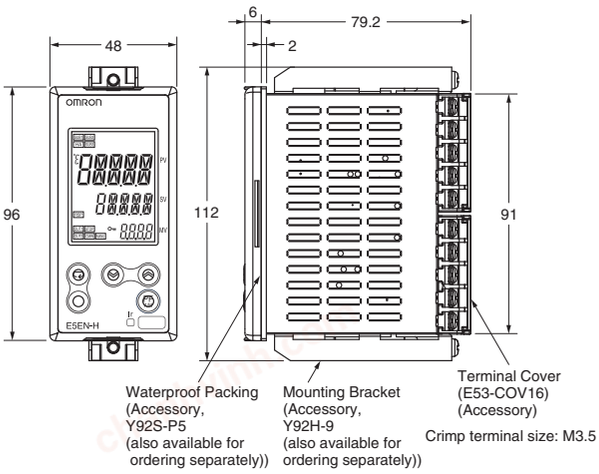

Mounted Separately

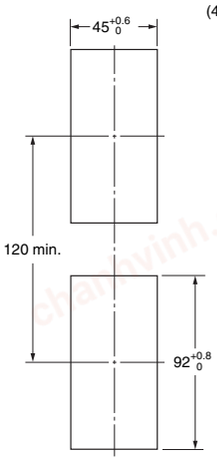

Group Mounted ✻

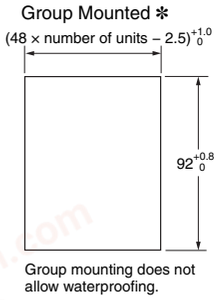

- Recommended panel thickness is 1 to 8 mm.
- Group mounting is not possible in the vertical direction. (Maintain the specified mounting space between Controllers.)
- When two or more Controllers are mounted, make sure that the surrounding temperature does not exceed the allowable operating temperature specified in the specifications.

✻ Group mounting is not possible if an SSR output is used for control output 1 or 2 and the E53-C3N or E53-C3DN Output Unit is used. For these combinations, maintain the following mounting space between Controllers.

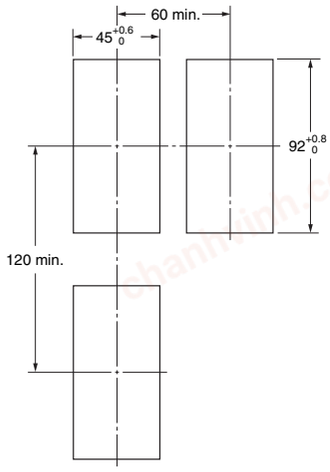

chanhvinh.com

Accessories (Order Separately)

USB-Infrared Conversion Cable

E58-CIFIR

USB-Infrared Conversion Cable



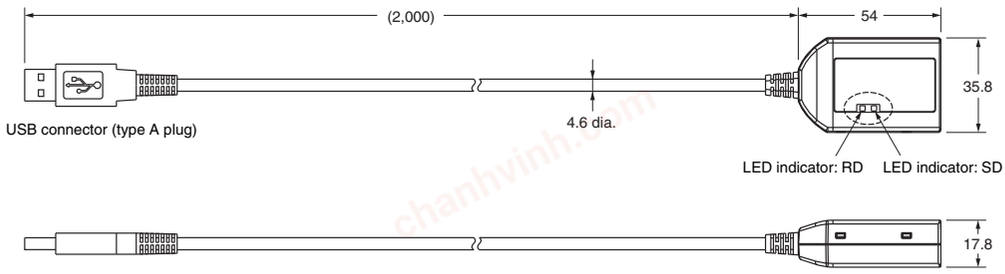

Mounting Adapter



With Mounting Adapter Connected

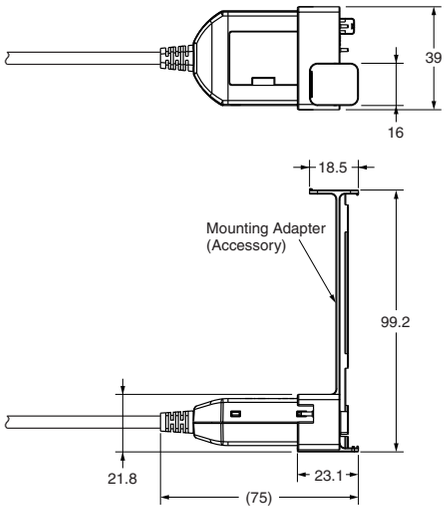

USB-Serial Conversion Cable

E58-CIFQ1

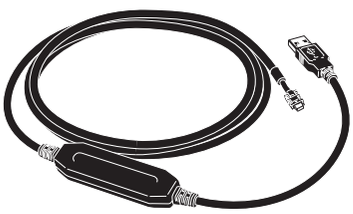

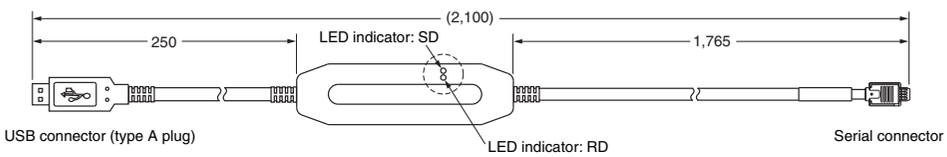

Terminal Covers

E53-COV16 (Six Covers provided.)



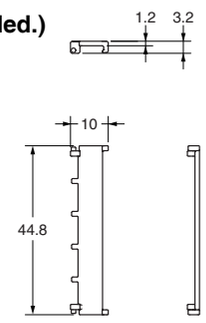

Mounting Brackets

Y92H-9 (2pcs)

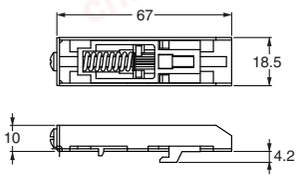

One set is packaged with the product.
Order Mounting Brackets separately if yours are lost or damaged.

chanhvinh.com

Waterproof Packing

Y92S-P4 (for DIN 96 × 96)

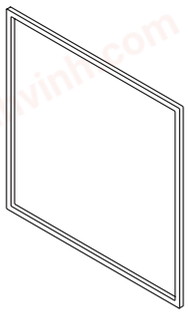

Y92S-P5 (for DIN 48 × 96)

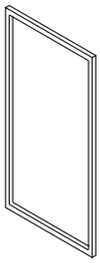

Order the Waterproof Packing separately if it becomes lost or damaged.
The Waterproof Packing can be used to achieve an IP66 degree of protection.
(Deterioration, shrinking, or hardening of the waterproof packing may occur depending on the operating environment. Therefore, periodic replacement is recommended to ensure the level of waterproofing specified in IP66. The time for periodic replacement depends on the operating environment. Be sure to confirm this point at your site. Consider one year a rough standard. OMRON shall not be liable for the level of water resistance if the customer does not perform periodic replacement.)
The Waterproof Packing does not need to be attached if a waterproof structure is not required.

Current Transformers

E54-CT1

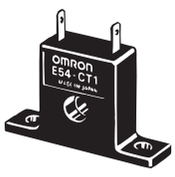

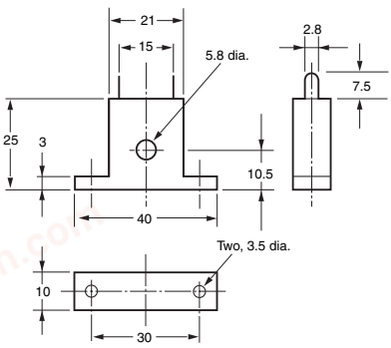

E54-CT3



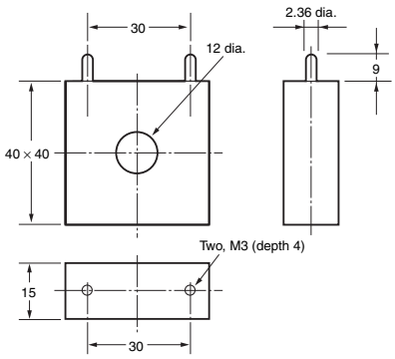

E54-CT3 Accessory

- **Armature**

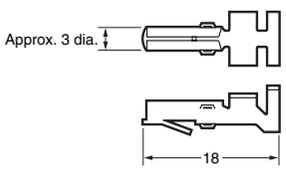

Connection Example

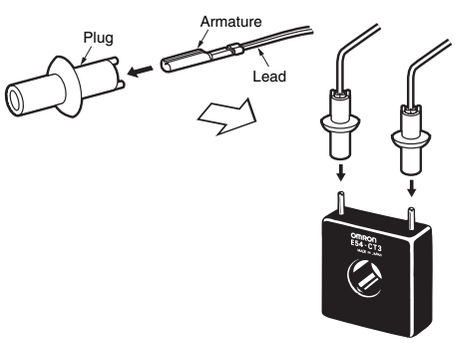

- **Plug**

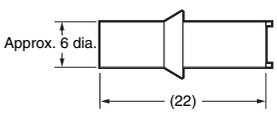

E54-CT1
Thru-current (Io) vs. Output Voltage (Eo) (Reference Values)

Maximum continuous heater current: 50 A (50/60 Hz)
Number of windings: 400±2
Winding resistance: 18±2 Ω

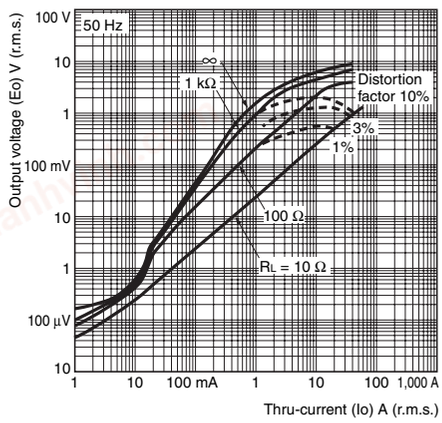

E54-CT3
Thru-current (Io) vs. Output Voltage (Eo) (Reference Values)

Maximum continuous heater current: 120 A (50/60 Hz)
(Maximum continuous heater current for an OMRON Temperature Controller is 50 A.)
Number of windings: 400±2
Winding resistance: 8±0.8 Ω

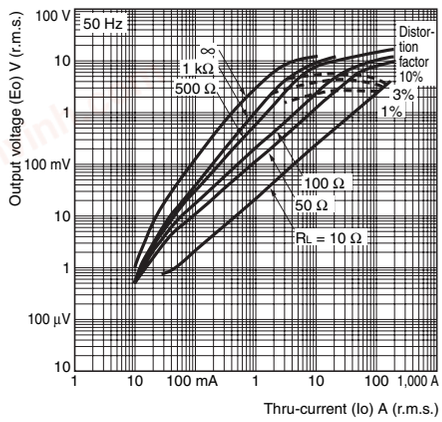

chanhvinh.com

Terms and Conditions Agreement

Read and understand this catalog.
Please read and understand this catalog before purchasing the products. Please consult your OMRON representative if you have any questions or comments.

Warranties.
(a) Exclusive Warranty. Omron's exclusive warranty is that the Products will be free from defects in materials and workmanship for a period of twelve months from the date of sale by Omron (or such other period expressed in writing by Omron). Omron disclaims all other warranties, express or implied.
(b) Limitations. OMRON MAKES NO WARRANTY OR REPRESENTATION, EXPRESS OR IMPLIED, ABOUT NON-INFRINGEMENT, MERCHANTABILITY OR FITNESS FOR A PARTICULAR PURPOSE OF THE PRODUCTS. BUYER ACKNOWLEDGES THAT IT ALONE HAS DETERMINED THAT THE
PRODUCTS WILL SUITABLY MEET THE REQUIREMENTS OF THEIR INTENDED USE.
Omron further disclaims all warranties and responsibility of any type for claims or expenses based on infringement by the Products or otherwise of any intellectual property right. (c) Buyer Remedy. Omron's sole obligation hereunder shall be, at Omron's election, to (i) replace (in the form originally shipped with Buyer responsible for labor charges for removal or replacement thereof) the non-complying Product, (ii) repair the non-complying Product, or (iii) repay or credit Buyer an amount equal to the purchase price of the non-complying Product; provided that in no event shall Omron be responsible for warranty, repair, indemnity or any other claims or expenses regarding the Products unless Omron's analysis confirms that the Products were properly handled, stored, installed and maintained and not subject to contamination, abuse, misuse or inappropriate modification. Return of any Products by Buyer must be approved in writing by Omron before shipment. Omron Companies shall not be liable for the suitability or unsuitability or the results from the use of Products in combination with any electrical or electronic components, circuits, system assemblies or any other materials or substances or environments. Any advice, recommendations or information given orally or in writing, are not to be construed as an amendment or addition to the above warranty.
See http://www.omron.com/global/ or contact your Omron representative for published information.

Limitation on Liability; Etc.
OMRON COMPANIES SHALL NOT BE LIABLE FOR SPECIAL, INDIRECT, INCIDENTAL, OR CONSEQUENTIAL DAMAGES, LOSS OF PROFITS OR PRODUCTION OR COMMERCIAL LOSS IN ANY WAY CONNECTED WITH THE PRODUCTS, WHETHER SUCH CLAIM IS BASED IN CONTRACT, WARRANTY, NEGLIGENCE OR STRICT LIABILITY.
Further, in no event shall liability of Omron Companies exceed the individual price of the Product on which liability is asserted.

Suitability of Use.
Omron Companies shall not be responsible for conformity with any standards, codes or regulations which apply to the combination of the Product in the Buyer's application or use of the Product. At Buyer's request, Omron will provide applicable third party certification documents identifying ratings and limitations of use which apply to the Product. This information by itself is not sufficient for a complete determination of the suitability of the Product in combination with the end product, machine, system, or other application or use. Buyer shall be solely responsible for determining appropriateness of the particular Product with respect to Buyer's application, product or system. Buyer shall take application responsibility in all cases.
NEVER USE THE PRODUCT FOR AN APPLICATION INVOLVING SERIOUS RISK TO LIFE OR PROPERTY OR IN LARGE QUANTITIES WITHOUT ENSURING THAT THE SYSTEM AS A WHOLE HAS BEEN DESIGNED TO ADDRESS THE RISKS, AND THAT THE OMRON PRODUCT(S) IS PROPERLY RATED AND INSTALLED FOR THE INTENDED USE WITHIN THE OVERALL EQUIPMENT OR SYSTEM.

Programmable Products.
Omron Companies shall not be responsible for the user's programming of a programmable Product, or any consequence thereof.

Performance Data.
Data presented in Omron Company websites, catalogs and other materials is provided as a guide for the user in determining suitability and does not constitute a warranty. It may represent the result of Omron's test conditions, and the user must correlate it to actual application requirements. Actual performance is subject to the Omron's Warranty and Limitations of Liability.

Change in Specifications.
Product specifications and accessories may be changed at any time based on improvements and other reasons. It is our practice to change part numbers when published ratings or features are changed, or when significant construction changes are made. However, some specifications of the Product may be changed without any notice. When in doubt, special part numbers may be assigned to fix or establish key specifications for your application. Please consult with your Omron's representative at any time to confirm actual specifications of purchased Product.

Errors and Omissions.
Information presented by Omron Companies has been checked and is believed to be accurate; however, no responsibility is assumed for clerical, typographical or proofreading errors or omissions.

2019.1

In the interest of product improvement, specifications are subject to change without notice.

OMRON Corporation
Industrial Automation Company

http://www.ia.omron.com/

(c)Copyright OMRON Corporation 2019 All Right Reserved.