chanhvinh.com

NX-series Digital Input Unit

NX-ID/IA

CSM_NX-ID_IA_DS_E_4_1

A Wide Range of Digital Input Units from General Purpose use to High-Speed Synchronous Control

- Digital Input Units for the NX-series modular I/O system.
- Connect to other NX-series I/O Units and EtherCAT Coupler units using the high-speed NX-bus.
- Synchronous Units update the status of input devices to the controller every EtherCAT cycle.



NEW

Features

- High-speed I/O refreshing is possible by connecting with the NX-series EtherCAT Coupler.
- I/O refreshing can be synchronized with the control cycle of the Controller. (Synchronous refreshing)
- ON/OFF response time of the high-speed model is 100 ns max, which enables high-speed, high-precision control.
- The screwless terminal block is detachable for easy commissioning and maintenance.
- Screwless clamp terminal block and Connector types are significantly reduces wiring work.
- Up to 16 digital inputs in a space-saving 12 mm width. (Connector Types 30 mm width)
- The lineup includes 4-point, 8-point, 16-point, and 32-point types with 3-wire, 2-wire and 1-wire connection methods.
- With input refreshing with input changed time, the Input Unit records the time when the input is changed and the changed time with the input value is read into the Controller.
- Using with the Unit that supports output refreshing with specified time stamp enables high-precision I/O control independent of the control cycle of the Controller.

System Configuration

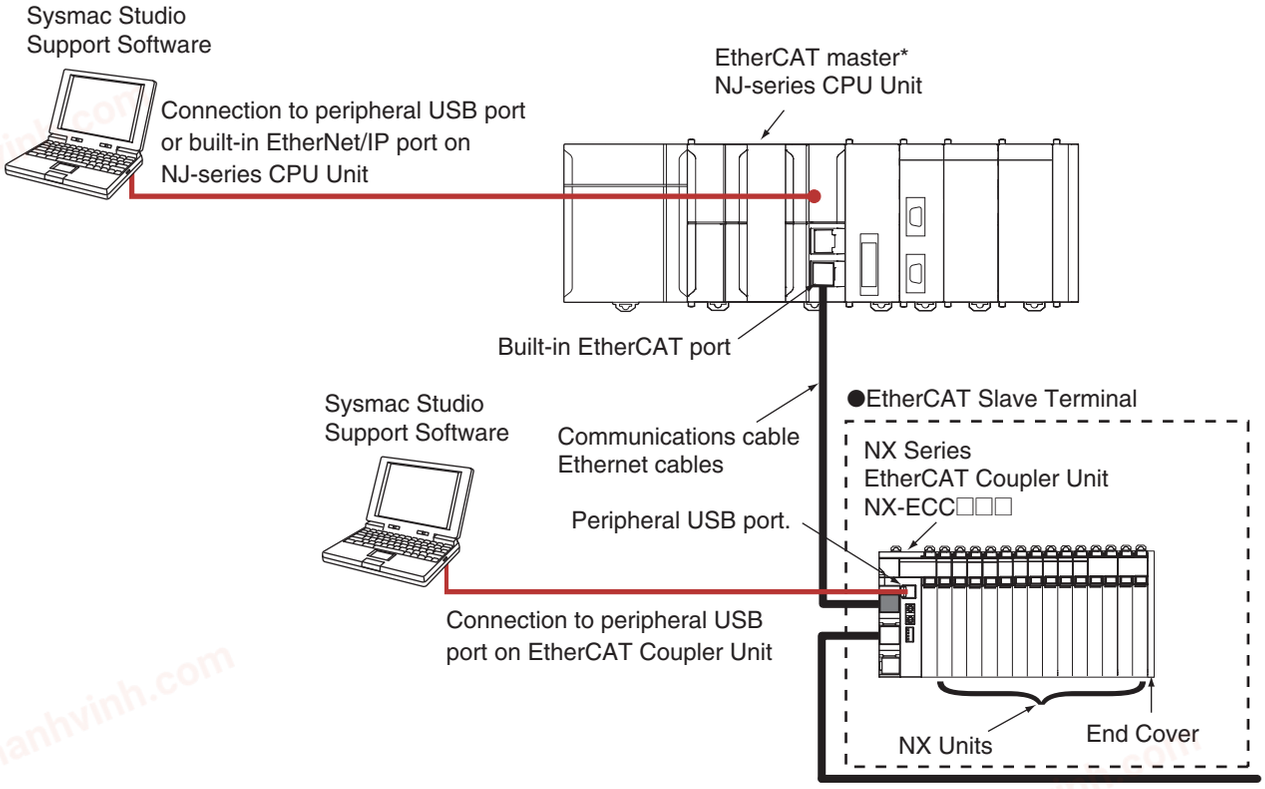

* OMRON CJ1W-NC□81/□82 Position Control Units cannot be connected to the EtherCAT Slave Terminal even though they support EtherCAT.

Sysmac® is a trademark or registered trademark of OMRON Corporation in Japan and other countries for OMRON factory automation products. EtherCAT® is a registered trademark of Beckhoff Automation GmbH for their patented technology. Other company names and product names in this document are the trademarks or registered trademarks of their respective companies.

chanhvinh.com

Ordering Information

International Standards

- The standards are abbreviated as follows: U: UL, U1: UL (Class I Division 2 Products for Hazardous Locations), C: CSA, UC: cULus, UC1: cULus (Class I Division 2 Products for Hazardous Locations), CU: cUL, N: NK, L: Lloyd, CE: EC Directives,and KC: KC Registration.
- Contact your OMRON representative for further details and applicable conditions for these standards.

Digital Input Unit (Screwless Clamping Terminal Block, 12 mm Width)

Unit type	Product Name	Specification					Model	Standards
		Number of points	Internal I/O common	Rated input voltage	I/O refreshing method	ON/OFF response time		
NX Series Digital Input Units	DC Input Units 	4 points	NPN	12 to 24 VDC	Switching Synchronous I/O refreshing and Free-Run refreshing	20 µs max./400 µs max.	NX-ID3317	UC1, N, L, CE, KC
				24 VDC		100 ns max./ 100 ns max.	NX-ID3343	
					Input refreshing with input changed time only*		NX-ID3344	
			PNP	12 to 24 VDC	Switching Synchronous I/O refreshing and Free-Run refreshing	20 µs max./400 µs max.	NX-ID3417	
				24 VDC	Input refreshing with input changed time only*	100 ns max./ 100 ns max.	NX-ID3443	
							NX-ID3444	
		8 points	NPN		Switching Synchronous I/O refreshing and Free-Run refreshing	20 µs max./400 µs max.	NX-ID4342	
			PNP				NX-ID4442	
			NPN				NX-ID5342	
		16 points	PNP				NX-ID5442	

* To use input refreshing with input changed time, NJ CPU Unit with unit version 1.06 or later, EtherCAT Coupler Unit with unit version 1.1 or later, and Sysmac Studio version 1.07 or higher are required.

DC Input Units (MIL Connector, 30 mm Width)

Unit type	Product Name	Specification					Model	Standards
		Number of points	Internal I/O common	Rated input voltage	I/O refreshing method	ON/OFF response time		
NX Series Digital Input Units	DC Input Units 	16 points	For both NPN/PNP	24 VDC	Switching Synchronous I/O refreshing and Free-Run refreshing	20 µs max./ 400 µs max.	NX-ID5142-5	UC1, CE, KC
		32 points					NX-ID6142-5	

Analog Input Unit (Screwless Clamping Terminal Block, 12 mm Width)

Unit type	Product Name	Specification				Model	Standards
		Number of points	Rated input voltage	I/O refreshing method	ON/OFF response time		
NX Series Analog Input Units	AC Input Units 	4 points	200 to 240 VAC, 50/60 Hz (170 to 264 VAC, ±3 Hz)	Free-Run refreshing	10 ms max./40 ms max.	NX-IA3317	UC1, N, CE, KC

Option

Product Name	Specification	Model	Standards
Unit/Terminal Block Coding Pins	For 10 Units (Terminal Block: 30 pins, Unit: 30 pins)	NX-AUX02	---

Product Name	Specification				Model	Standards
	No. of terminals	Terminal number indications	Ground terminal mark	Terminal current capacity		
Terminal Block	8	A/B	None	10 A	NX-TBA082	---
	12				NX-TBA122	
	16				NX-TBA162	

Accessories

Not included.

chanhvinh.com

General Specification

Item		Specification
Enclosure		Mounted in a panel
Grounding method		Ground to 100 Ω or less
Operating environment	**Ambient operating temperature**	0 to 55°C
	Ambient operating humidity	10% to 95% (with no condensation or icing)
	Atmosphere	Must be free from corrosive gases.
	Ambient storage temperature	–25 to 70°C (with no condensation or icing)
	Altitude	2,000 m max.
	Pollution degree	2 or less: Conforms to JIS B3502 and IEC 61131-2.
	Noise immunity	2 kV on power supply line (Conforms to IEC61000-4-4.)
	Overvoltage category	Category II: Conforms to JIS B3502 and IEC 61131-2.
	EMC immunity level	Zone B
	Vibration resistance	Conforms to IEC 60068-2-6. 5 to 8.4 Hz with 3.5-mm amplitude, 8.4 to 150 Hz, acceleration of 9.8 m/s^2, 100 min each in X, Y, and Z directions (10 sweeps of 10 min each = 100 min total)
	Shock resistance	Conforms to IEC 60068-2-27. 147 m/s^2, 3 times each in X, Y, and Z directions
Applicable standards		cULus: Listed UL508 and ANSI/ISA 12.12.01 EC: EN 61131-2 and C-Tick, KC: KC Registration, NK, LR

chanhvinh.com

Digital Input Unit Specifications

● DC Input Unit (Screwless Clamping Terminal Block 12 mm, Width)

NX-ID3317

Unit name	DC Input Unit	**Model**	NX-ID3317
Capacity	4 points	**External connection terminals**	Screwless clamping terminal block (12 terminals)
I/O refreshing method	Selectable Synchronous I/O refreshing or Free-Run refreshing		
Indicators	TS indicator, input indicator 	**Internal I/O common**	NPN
		Rated input voltage	12 to 24 VDC (9 to 28.8 VDC)
		Input current	6 mA typical (at 24 VDC), rated current
		ON voltage/ON current	9 VDC min./3 mA min. (between IOV and each signal)
		OFF voltage/OFF current	2 VDC max./1 mA max. (between IOV and each signal)
		ON/OFF response time	20 μs max./400 μs max.
		Input filter time	Without filter, 0.25 ms, 0.5 ms, 1 ms (factory setting), 2 ms, 4 ms, 8 ms, 16 ms, 32 ms, 64 ms, 128 ms, 256 ms
Dimensions	12 (W) x 100 (H) x 71 (D)	**Isolation method**	Photocoupler isolation
Insulation resistance	20 MΩ min. between isolated circuits (at 100 VDC)	**Dielectric strength**	510 VAC between isolated circuits for 1 minute at a leakage current of 5 mA max.
I/O power supply method	Supply from the NX bus	**Current capacity of I/O power supply terminal**	IOV: 0.1 A/terminal max., IOG: 0.1 A/terminal max.
NX Unit power consumption	0.50 W max.	**Current consumption from I/O power supply**	No consumption
Weight	65 g max.		
Circuit layout	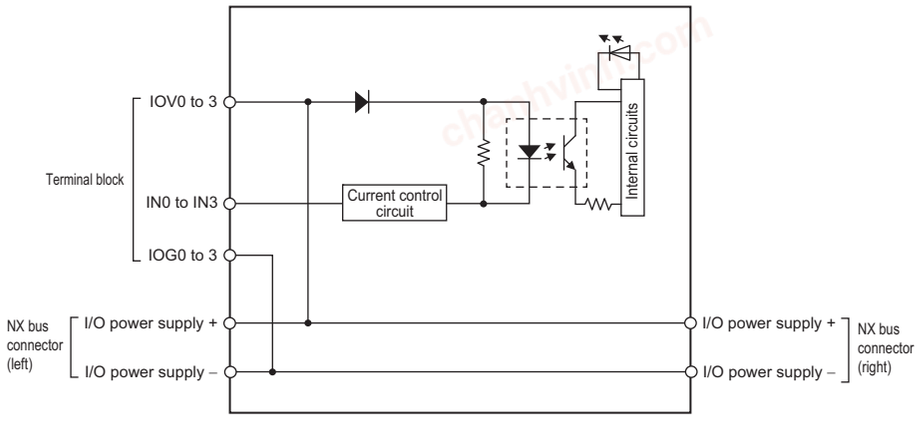		
Installation orientation and restrictions	Installation orientation: Possible in 6 orientations. Restrictions: No restrictions		
Terminal connection diagram	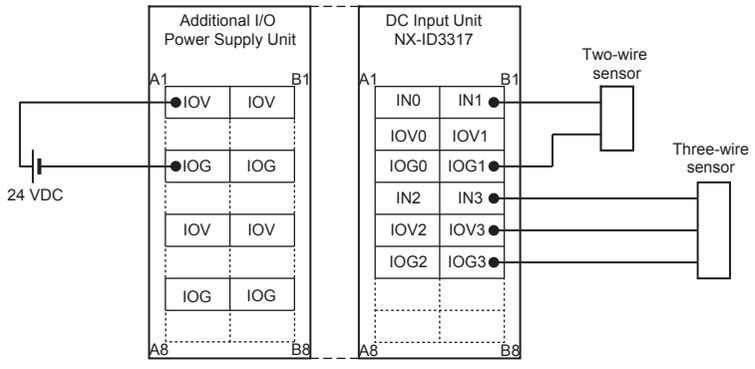		
Disconnection/ Short-circuit detection	Not supported.	**Protective function**	Not supported.

chanhvinh.com

NX-ID3343

Unit name	DC Input Unit	**Model**	NX-ID3343
Capacity	4 points	**External connection terminals**	Screwless clamping terminal block (12 terminals)
I/O refreshing method	Selectable Synchronous I/O refreshing or Free-Run refreshing		
Indicators	TS indicator, input indicator 	**Internal I/O common**	NPN
		Rated input voltage	24 VDC (15 to 28.8 VDC)
		Input current	3.5 mA typical (at 24 VDC), rated current
		ON voltage/ON current	15 VDC min./3 mA min. (between IOV and each signal)
		OFF voltage/OFF current	5 VDC max./1 mA max. (between IOV and each signal)
		ON/OFF response time	100 ns max./100 ns max.
		Input filter time	Without filter, 1 µs, 2 µs, 4 µs, 8 µs (factory setting), 16 µs, 32 µs, 64 µs, 128 µs, 256 µs
Dimensions	12 (W) x 100 (H) x 71 (D)	**Isolation method**	Digital isolator isolation
Insulation resistance	20 MΩ min. between isolated circuits (at 100 VDC)	**Dielectric strength**	510 VAC between isolated circuits for 1 minute at a leakage current of 5 mA max.
I/O power supply method	Supply from the NX bus	**Current capacity of I/O power supply terminal**	IOV: 0.1 A/terminal max., IOG: 0.1 A/terminal max.
NX Unit power consumption	0.55 W max.	**Current consumption from I/O power supply**	30 mA max.
Weight	65 g max.		
Circuit layout	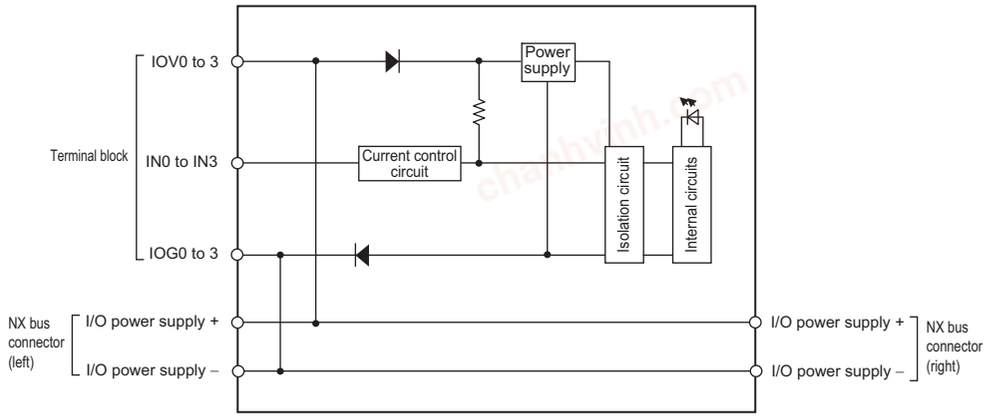		
Installation orientation and restrictions	Installation orientation: Possible in 6 orientations. Restrictions: No restrictions		
Terminal connection diagram	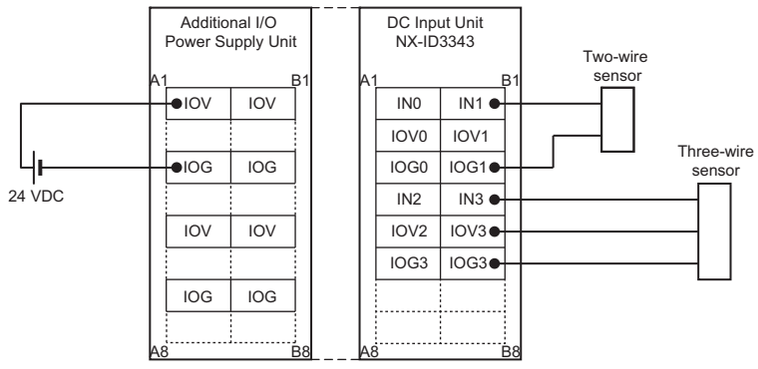		
Disconnection/ Short-circuit detection	Not supported.	**Protective function**	Not supported.

chanhvinh.com

NX-ID3344

Unit name	DC Input Unit	**Model**	NX-ID3344
Capacity	4 points	**External connection terminals**	Screwless clamping terminal block (12 terminals)
I/O refreshing method	Input refreshing with input changed time		
Indicators	TS indicator, input indicators 	**Internal I/O common**	NPN
		Rated input voltage	24 VDC (15 to 28.8 VDC)
		Input current	3.5 mA typical (at 24 VDC), rated current
		ON voltage/ON current	15 VDC min./3 mA min. (between IOV and each signal)
		OFF voltage/OFF current	5 VDC max./1 mA max. (between IOV and each signal)
		ON/OFF response time	100 ns max./100 ns max.
		Input filter time	No filter
Dimensions	12 (W) x 100 (H) x 71 (D)	**Isolation method**	Digital isolator isolation
Insulation resistance	20 MΩ min. between isolated circuits (at 100 VDC)	**Dielectric strength**	510 VAC between isolated circuits for 1 minute at a leakage current of 5 mA max.
I/O power supply method	Supply from the NX bus	**Current capacity of I/O power supply terminal**	IOV: 0.1 A/terminal max., IOG: 0.1 A/terminal max.
NX Unit power consumption	0.55 W max.	**Current consumption from I/O power supply**	30 mA max.
Weight	65 g max.		
Circuit layout	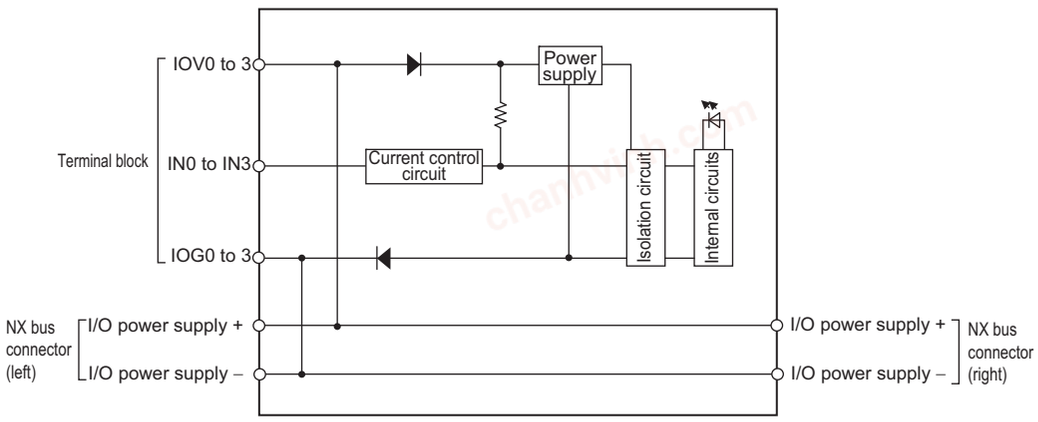		
Installation orientation and restrictions	Installation orientation: Possible in 6 orientations. Restrictions: No restrictions		
Terminal connection diagram	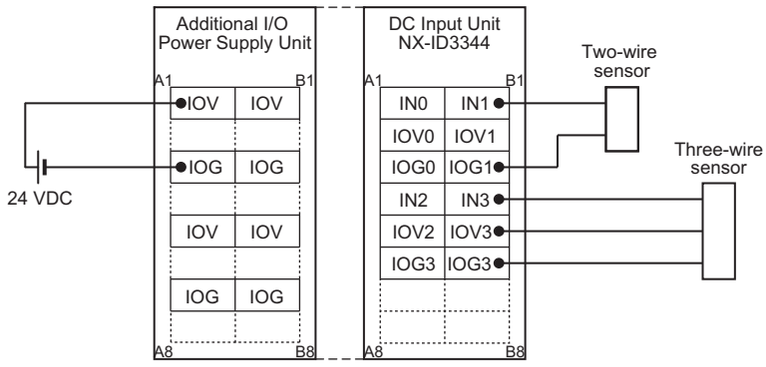		
Disconnection/ Short-circuit detection	Not supported.	**Protective function**	Not supported.

chanhvinh.com

NX-ID3417

Unit name	DC Input Unit	**Model**	NX-ID3417
Capacity	4 points	**External connection terminals**	Screwless clamping terminal block (12 terminals)
I/O refreshing method	Selectable Synchronous I/O refreshing or Free-Run refreshing		
Indicators	TS indicator, input indicator 	**Internal I/O common**	PNP
		Rated input voltage	12 to 24 VDC (9 to 28.8 VDC)
		Input current	6 mA typical (at 24 VDC), rated current
		ON voltage/ON current	9 VDC min./3 mA min. (between IOG and each signal)
		OFF voltage/OFF current	2 VDC max./1 mA max. (between IOG and each signal)
		ON/OFF response time	20 µs max./400 µs max.
		Input filter time	Without filter, 0.25 ms, 0.5 ms, 1 ms (factory setting), 2 ms, 4 ms, 8 ms, 16 ms, 32 ms, 64 ms, 128 ms, 256 ms
Dimensions	12 (W) x 100 (H) x 71 (D)	**Isolation method**	Photocoupler isolation
Insulation resistance	20 MΩ min. between isolated circuits (at 100 VDC)	**Dielectric strength**	510 VAC between isolated circuits for 1 minute at a leakage current of 5 mA max.
I/O power supply method	Supply from the NX bus	**Current capacity of I/O power supply terminal**	IOV: 0.1 A/terminal max., IOG: 0.1 A/terminal max.
NX Unit power consumption	0.50 W max.	**Current consumption from I/O power supply**	No consumption
Weight	65 g max.		
Circuit layout	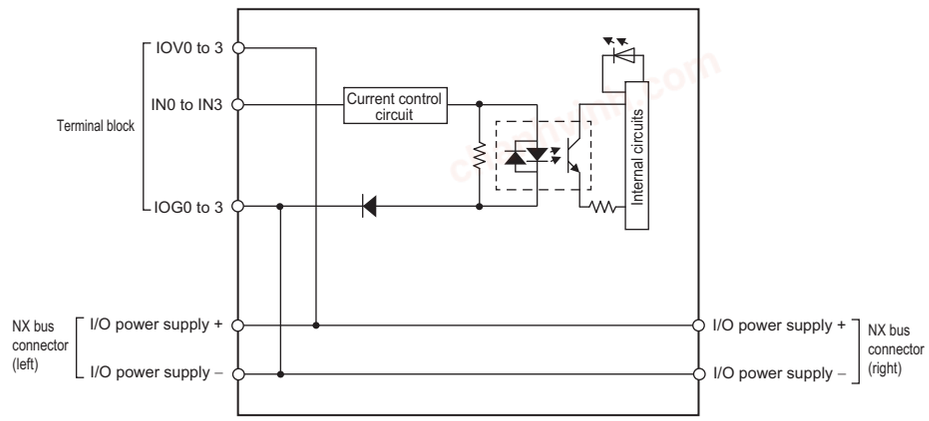		
Installation orientation and restrictions	Installation orientation: Possible in 6 orientations. Restrictions: No restrictions		
Terminal connection diagram	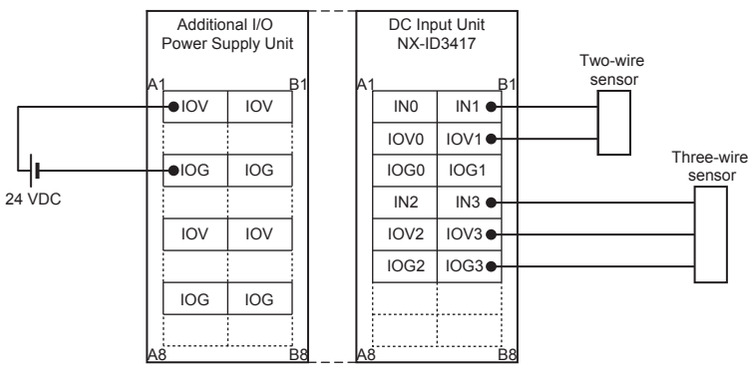		
Disconnection/ Short-circuit detection	Not supported.	**Protective function**	Not supported.

chanhvinh.com

NX-ID3443

Unit name	DC Input Unit	**Model**	NX-ID3443
Capacity	4 points	**External connection terminals**	Screwless clamping terminal block (12 terminals)
I/O refreshing method	Selectable Synchronous I/O refreshing or Free-Run refreshing		
Indicators	TS indicator, input indicator 	**Internal I/O common**	PNP
		Rated input voltage	24 VDC (15 to 28.8 VDC)
		Input current	3.5 mA typical (at 24 VDC), rated current
		ON voltage/ON current	15 VDC min./3 mA min. (between IOG and each signal)
		OFF voltage/OFF current	5 VDC max./1 mA max. (between IOG and each signal)
		ON/OFF response time	100 ns max./100 ns max.
		Input filter time	Without filter, 1 µs, 2 µs, 4 µs, 8 µs (factory setting),16 µs, 32 µs, 64 µs, 128 µs, 256 µs
Dimensions	12 (W) x 100 (H) x 71 (D)	**Isolation method**	Digital isolator isolation
Insulation resistance	20 MΩ min. between isolated circuits (at 100 VDC)	**Dielectric strength**	510 VAC between isolated circuits for 1 minute at a leakage current of 5 mA max.
I/O power supply method	Supply from the NX bus	**Current capacity of I/O power supply terminal**	IOV: 0.1 A/terminal max., IOG: 0.1 A/terminal max.
NX Unit power consumption	0.55 W max.	**Current consumption from I/O power supply**	30 mA max.
Weight	65 g max.		
Circuit layout	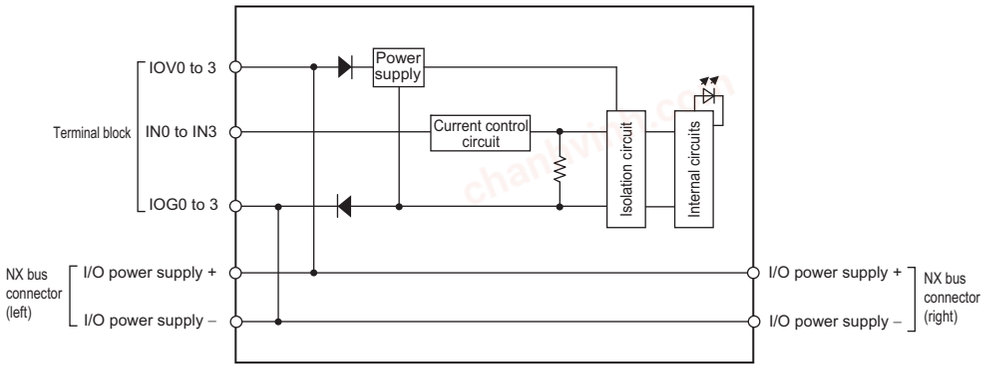		
Installation orientation and restrictions	Installation orientation: Possible in 6 orientations. Restrictions: No restrictions		
Terminal connection diagram	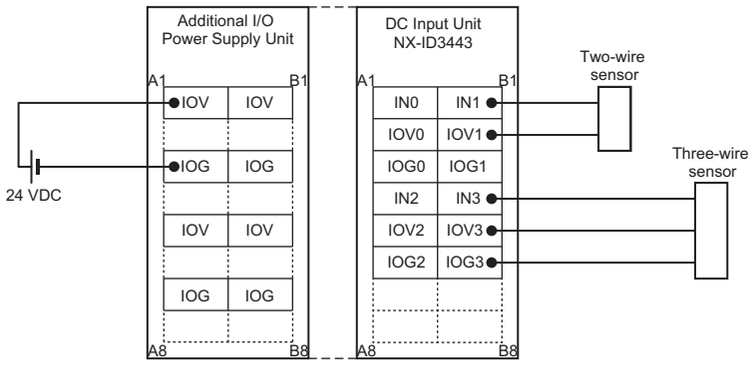		
Disconnection/ Short-circuit detection	Not supported.	**Protective function**	Not supported.

chanhvinh.com

NX-ID3444

Unit name	DC Input Unit	**Model**	NX-ID3444
Capacity	4 points	**External connection terminals**	Screwless clamping terminal block (12 terminals)
I/O refreshing method	Input refreshing with input changed time		
Indicators	TS indicator, input indicators 	**Internal I/O common**	PNP
		Rated input voltage	24 VDC (15 to 28.8 VDC)
		Input current	3.5 mA typical (at 24 VDC), rated current
		ON voltage/ON current	15 VDC min./3 mA min. (between IOG and each signal)
		OFF voltage/OFF current	5 VDC max./1 mA max. (between IOG and each signal)
		ON/OFF response time	100 ns max./100 ns max.
		Input filter time	No filter
Dimensions	12 (W) x 100 (H) x 71 (D)	**Isolation method**	Digital isolator isolation
Insulation resistance	20 MΩ min. between isolated circuits (at 100 VDC)	**Dielectric strength**	510 VAC between isolated circuits for 1 minute at a leakage current of 5 mA max.
I/O power supply method	Supply from the NX bus	**Current capacity of I/O power supply terminal**	IOV: 0.1 A/terminal max., IOG: 0.1 A/terminal max.
NX Unit power consumption	0.55 W max.	**Current consumption from I/O power supply**	30 mA max.
Weight	65 g max.		
Circuit layout	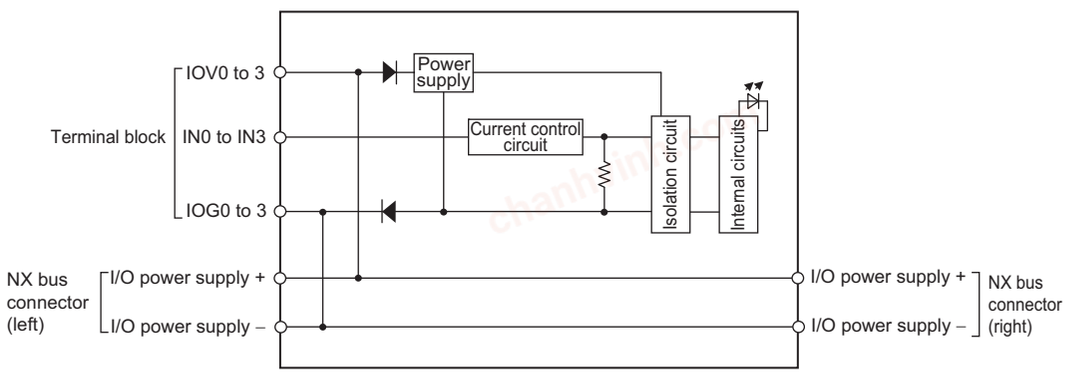		
Installation orientation and restrictions	Installation orientation: Possible in 6 orientations. Restrictions: No restrictions		
Terminal connection diagram	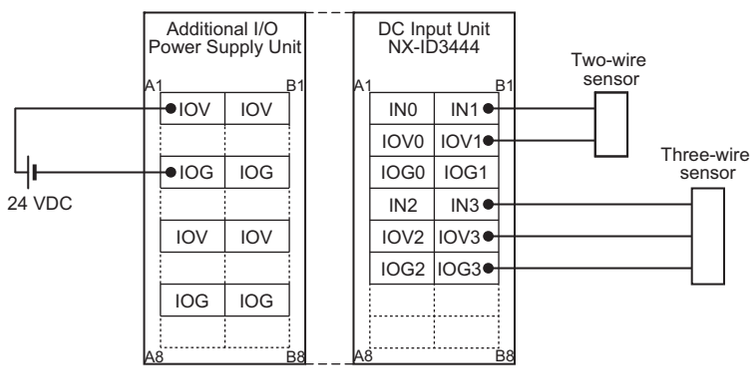		
Disconnection/ Short-circuit detection	Not supported.	**Protective function**	Not supported.

chanhvinh.com

NX-ID4342

Unit name	DC Input Unit	**Model**	NX-ID4342
Capacity	8 points	**External connection terminals**	Screwless clamping terminal block (16 terminals)
I/O refreshing method	Selectable Synchronous I/O refreshing or Free-Run refreshing		
Indicators	TS indicator, input indicator 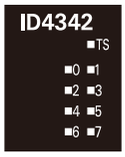	**Internal I/O common**	NPN
		Rated input voltage	24 VDC (15 to 28.8 VDC)
		Input current	3.5 mA typical (at 24 VDC), rated current
		ON voltage/ON current	15 VDC min./3 mA min. (between IOG and each signal)
		OFF voltage/OFF current	5 VDC max./1 mA max. (between IOG and each signal)
		ON/OFF response time	20 µs max./400 µs max.
		Input filter time	Without filter, 0.25 ms, 0.5 ms, 1 ms (factory setting), 2 ms, 4 ms, 8 ms, 16 ms, 32 ms, 64 ms, 128 ms, 256 ms
Dimensions	12 (W) x 100 (H) x 71 (D)	**Isolation method**	Photocoupler isolation
Insulation resistance	20 MΩ min. between isolated circuits (at 100 VDC)	**Dielectric strength**	510 VAC between isolated circuits for 1 minute at a leakage current of 5 mA max.
I/O power supply method	Supply from the NX bus	**Current capacity of I/O power supply terminal**	IOG: 0.1 A/terminal max.
NX Unit power consumption	0.50 W max.	**Current consumption from I/O power supply**	No consumption
Weight	65 g max.		
Circuit layout	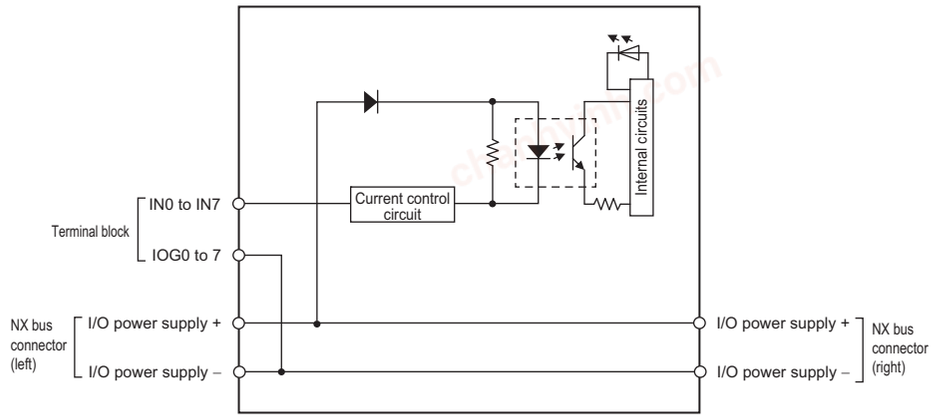		
Installation orientation and restrictions	Installation orientation: Possible in 6 orientations. Restrictions: No restrictions		
Terminal connection diagram	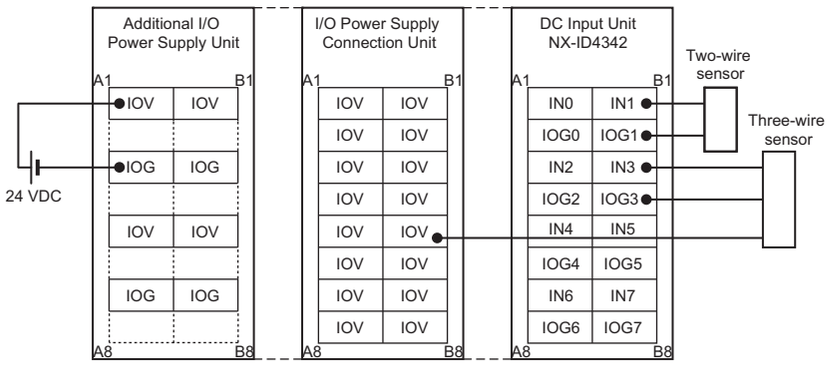		
Disconnection/ Short-circuit detection	Not supported.	**Protective function**	Not supported.

chanhvinh.com

NX-ID4442

Unit name	DC Input Unit	**Model**	NX-ID4442
Capacity	8 points	**External connection terminals**	Screwless clamping terminal block (16 terminals)
I/O refreshing method	Selectable Synchronous I/O refreshing or Free-Run refreshing		
Indicators	TS indicator, input indicator 	**Internal I/O common**	PNP
		Rated input voltage	24 VDC (15 to 28.8 VDC)
		Input current	3.5 mA typical (at 24 VDC), rated current
		ON voltage/ON current	15 VDC min./3 mA min. (between IOG and each signal)
		OFF voltage/OFF current	5 VDC max./1 mA max. (between IOG and each signal)
		ON/OFF response time	20 µs max./400 µs max.
		Input filter time	Without filter, 0.25 ms, 0.5 ms, 1 ms (factory setting), 2 ms, 4 ms, 8 ms, 16 ms, 32 ms, 64 ms, 128 ms, 256 ms
Dimensions	12 (W) x 100 (H) x 71 (D)	**Isolation method**	Photocoupler isolation
Insulation resistance	20 MΩ min. between isolated circuits (at 100 VDC)	**Dielectric strength**	510 VAC between isolated circuits for 1 minute at a leakage current of 5 mA max.
I/O power supply method	Supply from the NX bus	**Current capacity of I/O power supply terminal**	IOV: 0.1 A/terminal max.
NX Unit power consumption	0.50 W max.	**Current consumption from I/O power supply**	No consumption
Weight	65 g max.		
Circuit layout	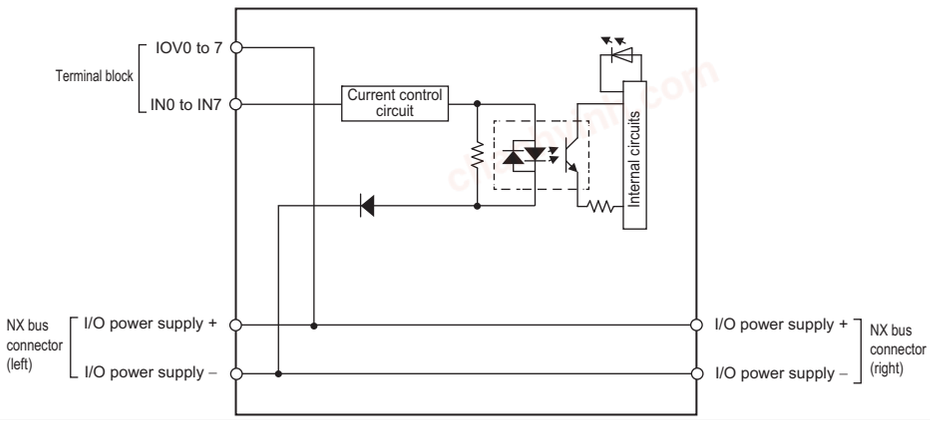		
Installation orientation and restrictions	Installation orientation: Possible in 6 orientations. Restrictions: No restrictions		
Terminal connection diagram	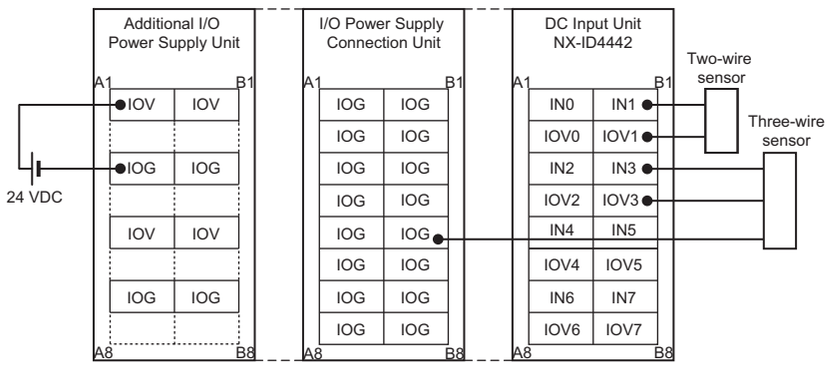		
Disconnection/ Short-circuit detection	Not supported.	**Protective function**	Not supported.

chanhvinh.com

NX-ID5342

Unit name	DC Input Unit	**Model**	NX-ID5342
Capacity	16 points	**External connection terminals**	Screwless clamping terminal block (16 terminals)
I/O refreshing method	Selectable Synchronous I/O refreshing or Free-Run refreshing		
Indicators	TS indicator, input indicator 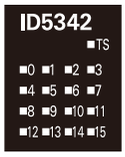	**Internal I/O common**	NPN
		Rated input voltage	24 VDC (15 to 28.8 VDC)
		Input current	2.5 mA typical (at 24 VDC), rated current
		ON voltage/ON current	15 VDC min./2 mA min. (between IOG and each signal)
		OFF voltage/OFF current	5 VDC max./0.5 mA max. (between IOG and each signal)
		ON/OFF response time	20 µs max./400 µs max.
		Input filter time	Without filter, 0.25 ms, 0.5 ms, 1 ms (factory setting), 2 ms, 4 ms, 8 ms, 16 ms, 32 ms, 64 ms, 128 ms, 256 ms
Dimensions	12 (W) x 100 (H) x 71 (D)	**Isolation method**	Photocoupler isolation
Insulation resistance	20 MΩ min. between isolated circuits (at 100 VDC)	**Dielectric strength**	510 VAC between isolated circuits for 1 minute at a leakage current of 5 mA max.
I/O power supply method	Supply from the NX bus	**Current capacity of I/O power supply terminal**	Without I/O power supply terminals
NX Unit power consumption	0.55 W max.	**Current consumption from I/O power supply**	No consumption
Weight	65 g max.		
Circuit layout	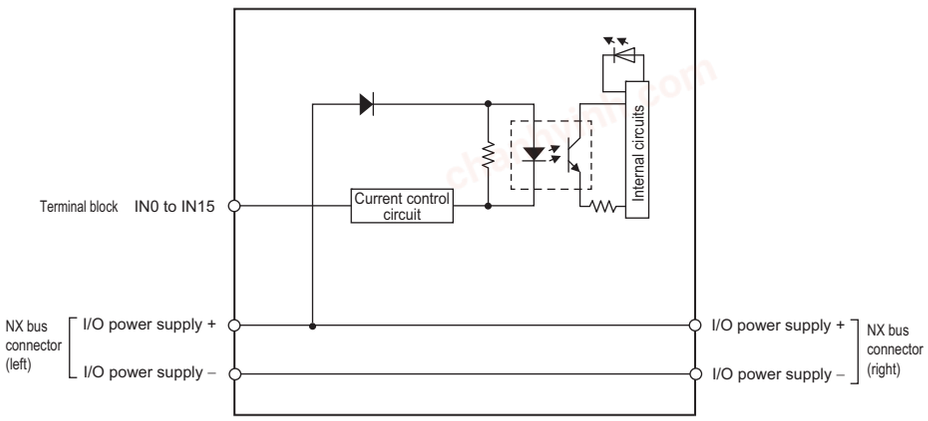		
Installation orientation and restrictions	Installation orientation: Possible in 6 orientations. Restrictions: No restrictions		
Terminal connection diagram	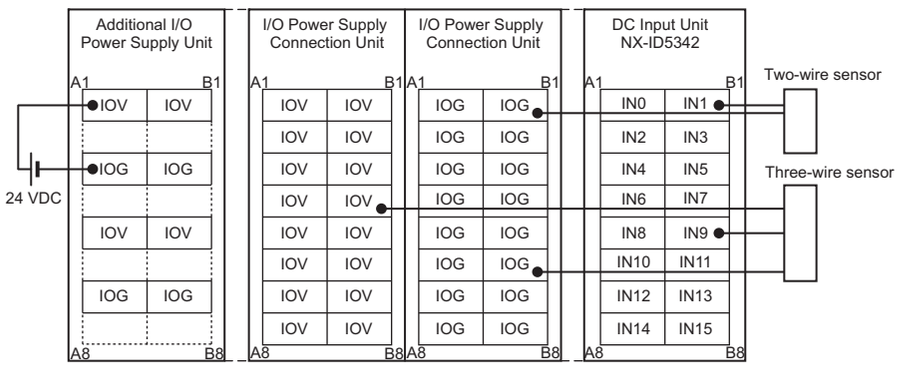		
Disconnection/ Short-circuit detection	Not supported.	**Protective function**	Not supported.

chanhvinh.com

NX-ID5442

Unit name	DC Input Unit	**Model**	NX-ID5442
Capacity	16 points	**External connection terminals**	Screwless clamping terminal block (16 terminals)
I/O refreshing method	Selectable Synchronous I/O refreshing or Free-Run refreshing		
Indicators	TS indicator, input indicator 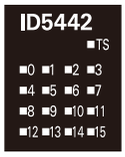	**Internal I/O common**	PNP
		Rated input voltage	24 VDC (15 to 28.8 VDC)
		Input current	2.5 mA typical (at 24 VDC), rated current
		ON voltage/ON current	15 VDC min./2 mA min. (between IOG and each signal)
		OFF voltage/OFF current	5 VDC max./0.5 mA max. (between IOG and each signal)
		ON/OFF response time	20 µs max./400 µs max.
		Input filter time	Without filter, 0.25 ms, 0.5 ms, 1 ms (factory setting), 2 ms, 4 ms, 8 ms, 16 ms, 32 ms, 64 ms, 128 ms, 256 ms
Dimensions	12 (W) x 100 (H) x 71 (D)	**Isolation method**	Photocoupler isolation
Insulation resistance	20 MΩ min. between isolated circuits (at 100 VDC)	**Dielectric strength**	510 VAC between isolated circuits for 1 minute at a leakage current of 5 mA max.
I/O power supply method	Supply from the NX bus	**Current capacity of I/O power supply terminal**	Without I/O power supply terminals
NX Unit power consumption	0.55 W max.	**Current consumption from I/O power supply**	No consumption
Weight	65 g max.		
Circuit layout	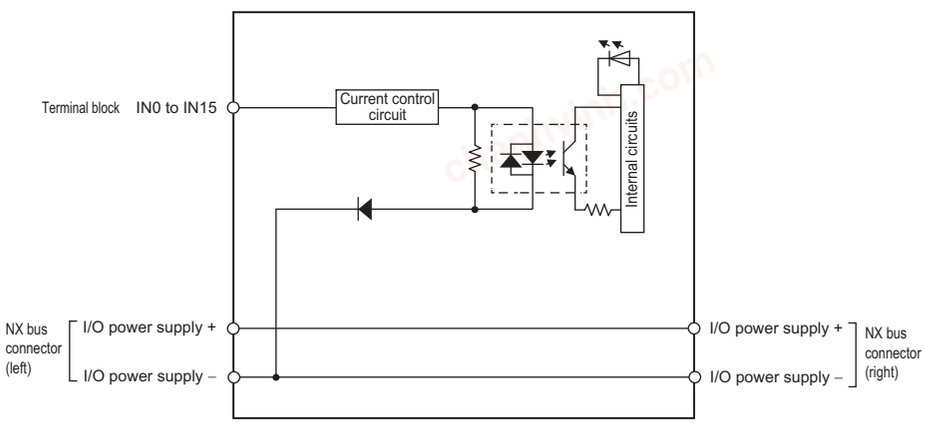		
Installation orientation and restrictions	Installation orientation: Possible in 6 orientations. Restrictions: No restrictions		
Terminal connection diagram	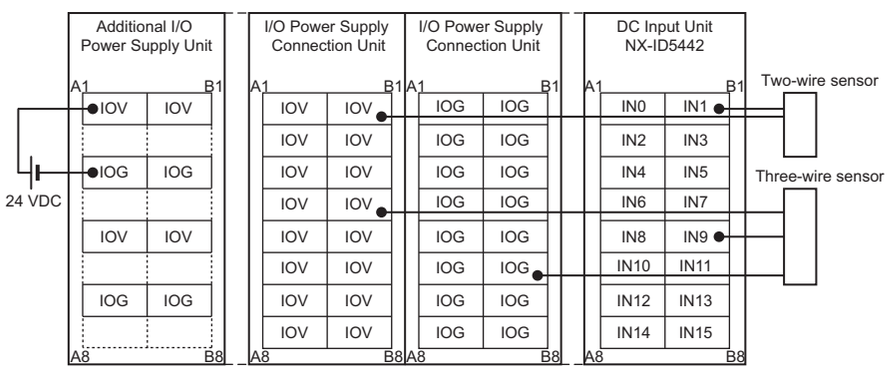		
Disconnection/ Short-circuit detection	Not supported.	**Protective function**	Not supported.

chanhvinh.com

● DC Input Units (MIL Connector, 30 mm Width)

NX-ID5142-5

Unit name	DC Input Unit	**Model**	NX-ID5142-5
Number of points	16 points	**External connection terminals**	MIL connector (20 terminals)
I/O refreshing method	Switching Synchronous I/O refreshing and Free-Run refreshing		
Indicators	TS indicator, input indicators 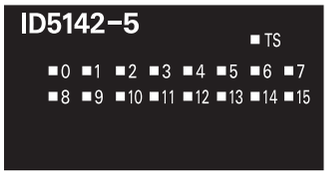	**Internal I/O common**	For both NPN/PNP
		Rated input voltage	24 VDC (15 to 28.8 VDC)
		Input current	7 mA typical (at 24 VDC)
		ON voltage/ON current	15 VDC min./3 mA min. (between COM and each signal)
		OFF voltage/OFF current	5 VDC max./1 mA max. (between COM and each signal)
		ON/OFF response time	20 μs max./400 μs max.
		Input filter time	No filter, 0.25 ms, 0.5 ms, 1 ms (default), 2 ms, 4 ms, 8 ms, 16 ms, 32 ms, 64 ms, 128 ms, 256 ms
Dimensions	30 (W) x 100 (H) x 71 (D)	**Isolation method**	Photocoupler isolation
Insulation resistance	20 MΩ min. between isolated circuits (at 100 VDC)	**Dielectric strength**	510 VAC between isolated circuits for 1 minute at a leakage current of 5 mA max.
I/O power supply method	Supply from external source	**Current capacity of I/O power supply terminal**	Without I/O power supply terminals
NX Unit power consumption	0.55 W max.	**Current consumption from I/O power supply**	No consumption
Weight	85 g max.		
Circuit layout	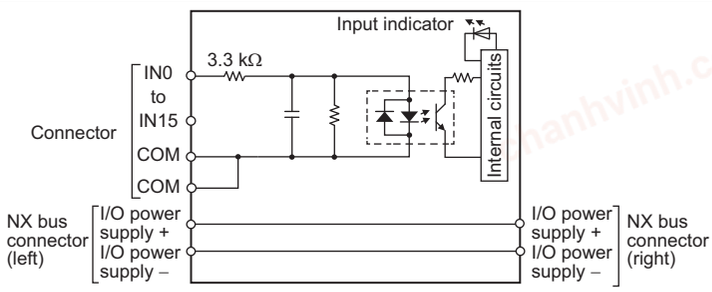		

chanhvinh.com

Installation orientation and restrictions	Installation orientation: Possible in 6 orientations. Restrictions: As shown in the following. • For upright installation 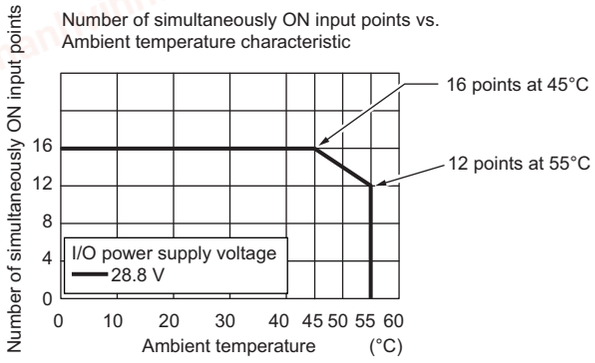 • For any installation other than upright 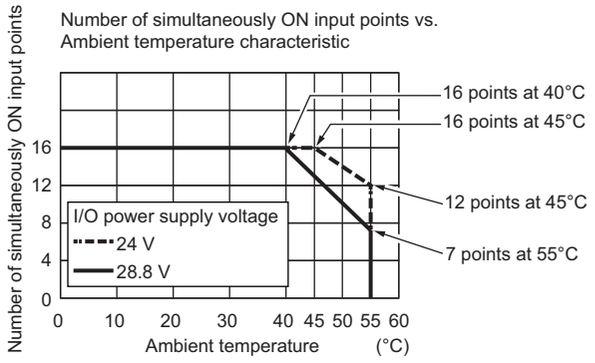
Terminal connection diagram	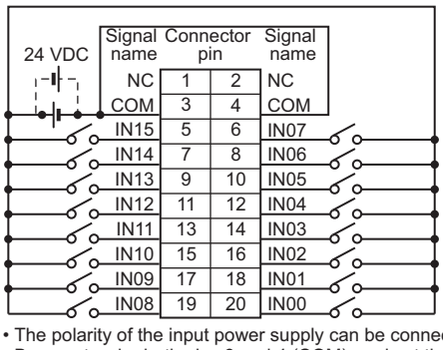 • The polarity of the input power supply can be connected in either direction. • Be sure to wire both pins 3 and 4 (COM), and set the same polarity for both pins.

Disconnection/ Short-circuit detection	Not supported.	**Protective function**	Not supported.

chanhvinh.com

NX-ID6142-5

Unit name	DC Input Unit	**Model**	NX-ID6142-5
Number of points	32 points	**External connection terminals**	MIL connector (40 terminals)
I/O refreshing method	Switching Synchronous I/O refreshing and Free-Run refreshing		
Indicators	TS indicator, input indicators 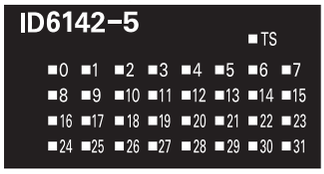	**Internal I/O common**	For both NPN/PNP
		Rated input voltage	24 VDC (19 to 28.8 VDC)
		Input current	4.1 mA typical (24 VDC)
		ON voltage/ON current	19 VDC min./3 mA min. (between COM and each signal)
		OFF voltage/OFF current	5 VDC max./1 mA max. (between COM and each signal)
		ON/OFF response time	20 μs max./400 μs max.
		Input filter time	No filter, 0.25 ms, 0.5 ms, 1 ms (default), 2 ms, 4 ms, 8 ms, 16 ms, 32 ms, 64 ms, 128 ms, 256 ms
Dimensions	30 (W) x 100 (H) x 71 (D)	**Isolation method**	Photocoupler isolation
Insulation resistance	20 MΩ min. between isolated circuits (at 100 VDC)	**Dielectric strength**	510 VAC between isolated circuits for 1 minute at a leakage current of 5 mA max.
I/O power supply method	Supply from external source	**Current capacity of I/O power supply terminal**	Without I/O power supply terminals
NX Unit power consumption	0.60 W max.	**Current consumption from I/O power supply**	No consumption
Weight	90 g max.		
Circuit layout	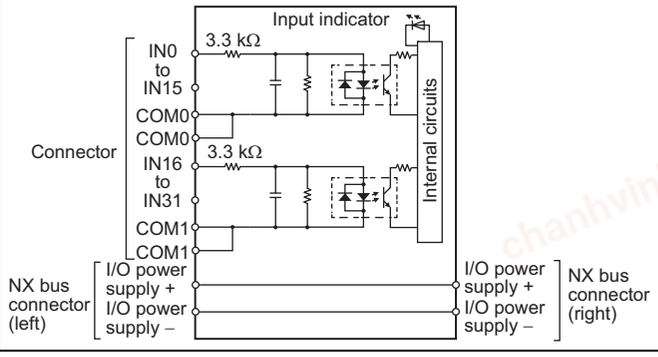		

chanhvinh.com

Installation orientation and restrictions

Installation orientation: Possible in 6 orientations.
Restrictions: As shown in the following.

• For upright installation

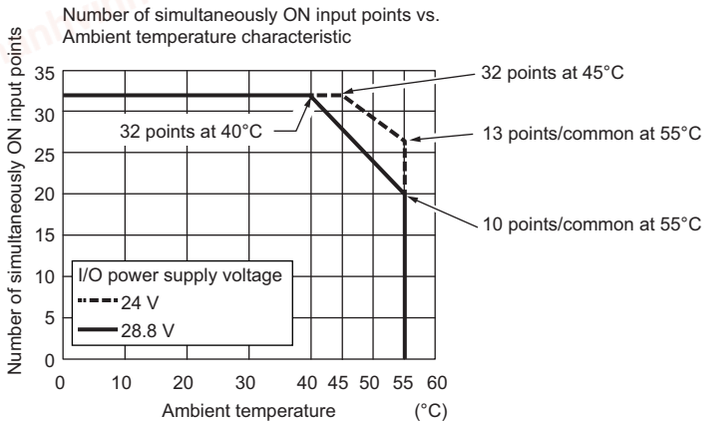

• For any installation other than upright

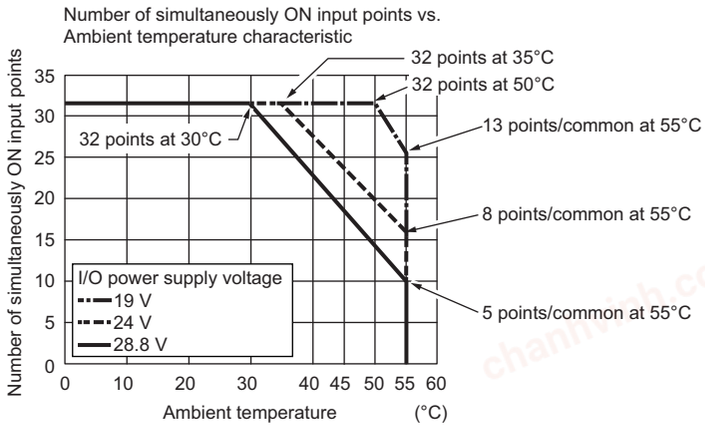

Terminal connection diagram

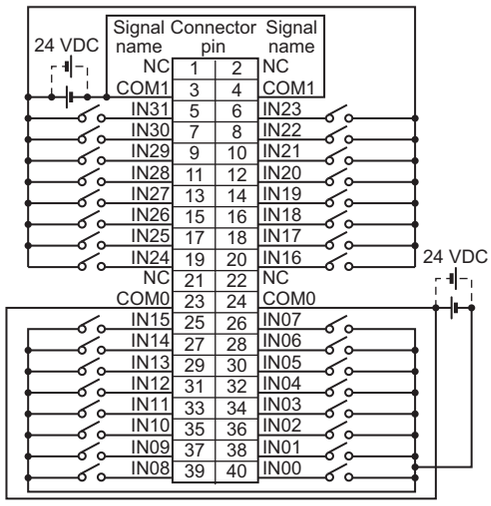

• The polarity of the input power supply can be connected in either direction.
• Be sure to wire both pins 23 and 24 (COM0), and set the same polarity for both pins.
• Be sure to wire both pins 3 and 4 (COM1), and set the same polarity for both pins.

Disconnection/ Short-circuit detection	Not supported.	**Protective function**	Not supported.

chanhvinh.com

● AC Input Units (Screwless Clamping Terminal Block, 12 mm Width)

NX-IA3117

Unit name	AC Input Unit	**Model**	NX-IA3117
Number of points	4 points, independent contacts	**External connection terminals**	Screwless clamping terminal block (8 terminals)
Capacity	Free-Run refreshing		
Indicators	TS indicator, input indicator 	**Internal I/O common**	No polarity
		Rated input voltage	200 to 240 VAC, 50/60 Hz (170 to 264 VAC, ±3 Hz)
		Input current	9 mA typical (at 200 VAC, 50 Hz) 11 mA typical (at 200 VAC, 60 Hz)
		ON voltage/ON current	120 VAC min./4 mA min.
		OFF voltage/OFF current	40 VAC max./2 mA max.
		ON/OFF response time	10 ms max./40 ms max.
		Input filter time	No filter, 0.25 ms, 0.5 ms, 1 ms (default), 2 ms, 4 ms, 8 ms, 16 ms, 32 ms, 64 ms, 128 ms, 256 ms
Dimensions	12 (W) x 100 (H) x 71 (D)	**Isolation method**	Photocoupler isolation
Insulation resistance	Between each AC input circuit: 20 MΩ min. (at 500 VDC) Between the external terminals and the functional ground terminal: 20 MΩ min. (at 500 VDC) Between the external terminals and internal circuits: 20 MΩ min. (at 500 VDC) Between the internal circuit and the functional ground terminal: 20 MΩ min. (at 100 VDC)	**Dielectric strength**	Between each AC input circuit: AC3700V VAC for 1 min at a leakage current of 5 mA max. Between the external terminals and functional ground terminal: 2300 VAC for 1 min at a leakage current of 5 mA max. Between the external terminals and internal circuits: 2300 VAC for 1 min at a leakage current of 5 mA max. Between the internal circuit and the functional ground terminal: 510 VAC for 1 min at a leakage current of 5 mA max.
I/O power supply method	Supplied from external source.	**Current capacity of I/O power supply terminal**	Without I/O power supply terminals
NX Unit power consumption	0.5 W max.	**Current consumption from I/O power supply**	No consumption
Weight	60 g max.		
Circuit layout	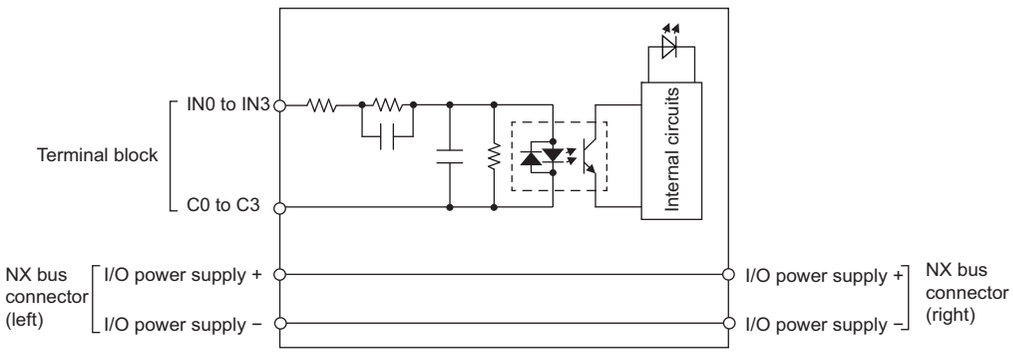		
Installation orientation and restrictions	Installation orientation: Possible in 6 orientations. Restrictions: No restrictions		
Terminal connection diagram	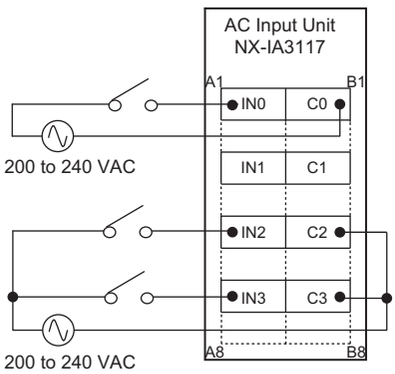		
Disconnection/ Short-circuit detection	Not supported.	**Protective function**	Not supported.

chanhvinh.com

Version Information

NX Units		Corresponding unit versions/versions		
Model	Unit Version	EtherCAT Coupler Units NX-ECC201/ECC202 *	NJ-series CPU Units NJ501-□□□□/NJ301-□□□□	Sysmac Studio
NX-ID3317	Ver.1.0	Version 1.0 or later	Version 1.05 or later	Version 1.06 or higher
NX-ID3343				
NX-ID3344		Version 1.1 or later	Version 1.06 or later	Version 1.07 or higher
NX-ID3417		Version 1.0 or later	Version 1.05 or later	Version 1.06 or higher
NX-ID3443				
NX-ID3444		Version 1.1 or later	Version 1.06 or later	Version 1.07 or higher
NX-ID4342		Version 1.0 or later	Version 1.05 or later	Version 1.06 or higher
NX-ID4442				
NX-ID5142-5				Ver.1.10 or higher
NX-ID5342				Version 1.06 or higher
NX-ID5442				
NX-ID6142-5				Ver.1.10 or higher
NX-IA3117				Version 1.08 or higher

* For the NX-ECC202, there is no unit version of 1.1 or earlier.

chanhvinh.com

External Interface

Screwless Clamping Terminal Block Type

● 12 mm Width

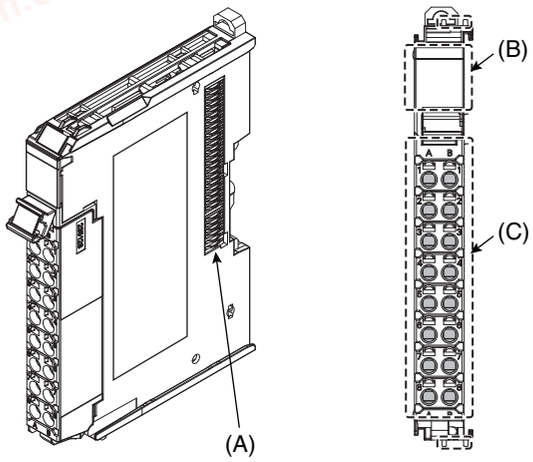

Symbol	Name	Function
(A)	NX bus connector	This connector is used to connect each Unit.
(B)	Indicators	The indicators show the current operating status of the Unit.
(C)	Terminal block	The terminal block is used to connect external devices. The number of terminals depends on the type of Unit.

Terminal Blocks

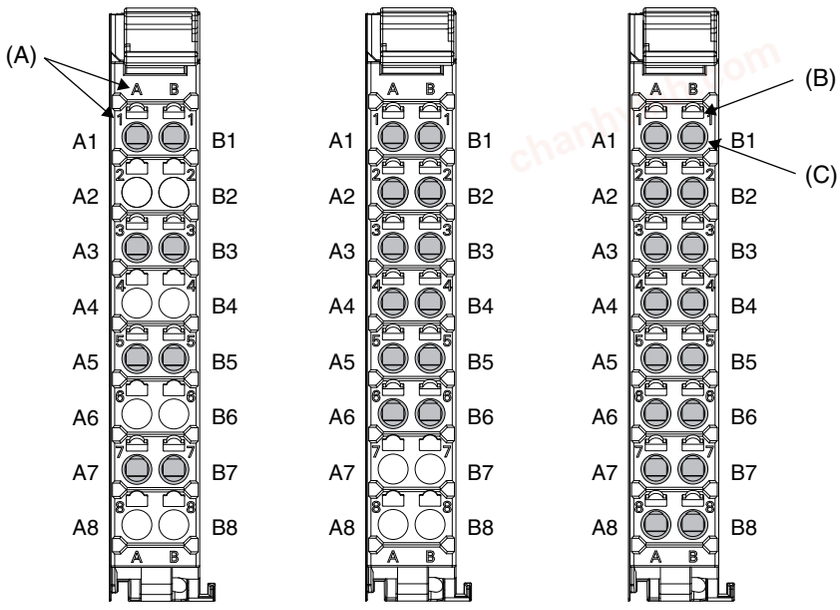

Symbol	Name	Function
(A)	Terminal number indications	Terminal numbers for which A to D indicate the column, and 1 to 8 indicate the line are displayed. The terminal number is a combination of column and line, so A1 to A8 and B1 to B8 are displayed. The terminal number indications are the same regardless of the number of terminals on the terminal block.
(B)	Release holes	Insert a flat-blade screwdriver into these holes to connect and remove the wires.
(C)	Terminal holes	The wires are inserted into these holes.

Applicable Terminal Blocks for Each Unit Model

Unit model	Terminal Blocks				
	Model	No. of terminals	Terminal number indications	Ground terminal mark	Terminal current capacity
NX-ID3□□□	NX-TBA122	12	A/B	None	10 A
NX-ID4□□□	NX-TBA162	16	A/B	None	10 A
NX-ID5□□□	NX-TBA162	16	A/B	None	10 A
NX-IA3117	NX-TBA082	8	A/B	None	10 A

chanhvinh.com

Applicable Wires

Using Ferrules

If you use ferrules, attach the twisted wires to them.
Observe the application instructions for your ferrules for the wire stripping length when attaching ferrules.
Always use one-pin ferrules. Do not use two-pin ferrules.

The applicable ferrules, wires, and crimping tool are given in the following table.

Terminal types	Manufacturer	Ferrule model number	Applicable wire (mm^2 (AWG))	Crimping tool
Terminals other than ground terminals	Phoenix Contact	AI0,34-8	0.34 (#22)	Phoenix Contact (The figure in parentheses is the applicable wire size.) CRIMPFOX 6 (0.25 to 6 mm^2, AWG24 to 10)
		AI0,5-8	0.5 (#20)	
		AI0,5-10		
		AI0,75-8	0.75 (#18)	
		AI0,75-10		
		AI1,0-8	1.0 (#18)	
		AI1,0-10		
		AI1,5-8	1.5 (#16)	
		AI1,5-10		
Ground terminals		AI2,5-10	2.0 *	
Terminals other than ground terminals	Weidmuller	H0.14/12	0.14 (#26)	Weidmuller (The figure in parentheses is the applicable wire size.) PZ6 Roto (0.14 to 6 mm^2, AWG 26 to 10)
		H0.25/12	0.25 (#24)	
		H0.34/12	0.34 (#22)	
		H0.5/14	0.5 (#20)	
		H0.5/16		
		H0.75/14	0.75 (#18)	
		H0.75/16		
		H1.0/14	1.0 (#18)	
		H1.0/16		
		H1.5/14	1.5 (#16)	
		H1.5/16		

* Some AWG 14 wires exceed 2.0 mm^2 and cannot be used in the screwless clamping terminal block.

When you use any ferrules other than those in the above table, crimp them to the twisted wires so that the following processed dimensions are achieved.

Finished Dimensions of Ferrules

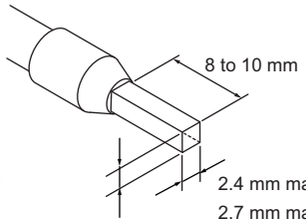

1.6 mm max. (except ground terminals)
2.0 mm max. (ground terminals)

2.4 mm max. (except ground terminals)
2.7 mm max. (ground terminals)

Using Twisted Wires/Solid Wires

If you use the twisted wires or the solid wires, the applicable wire range and conductor length (stripping length) are as follows.

Terminal types	Applicable wires	Conductor length (stripping length)
Ground terminals	2.0 mm^2	9 to 10 mm
Terminals other than ground terminals	0.08 to 1.5 mm^2 AWG28 to 16	8 to 10 mm

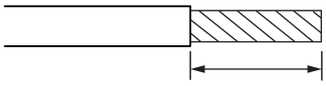

Conductor length (stripping length)

chanhvinh.com

Units with MIL Connectors

● 1 Connector with 20 Terminals

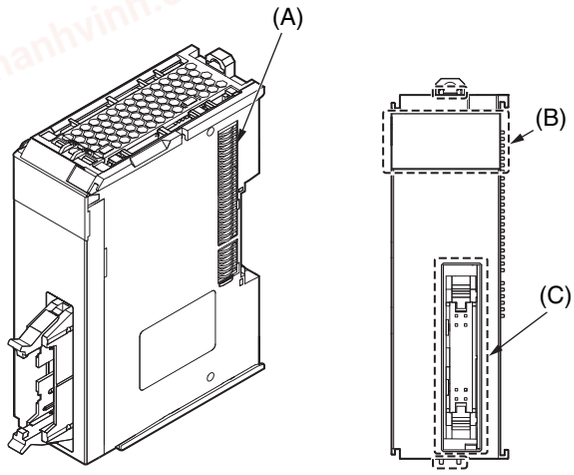

Letter	Name	Function
(A)	NX bus connector	This connector is used to connect each Unit.
(B)	Indicators	The indicators show the current operating status of the Unit.
(C)	Connectors	The connectors are used to connect to external devices.

● 1 Connector with 40 Terminals

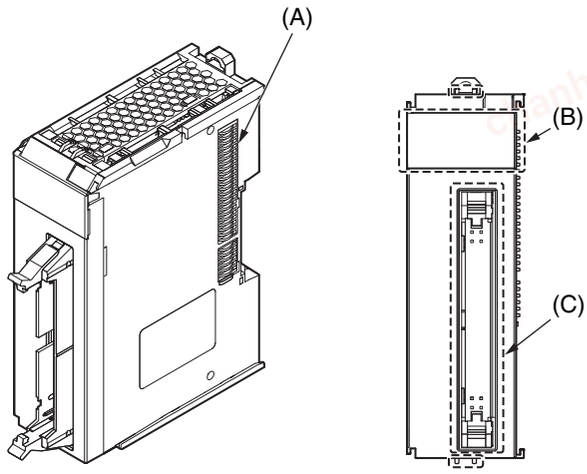

Letter	Name	Function
(A)	NX bus connector	This connector is used to connect each Unit.
(B)	Indicators	The indicators show the current operating status of the Unit.
(C)	Connectors	The connectors are used to connect to external devices.

chanhvinh.com

Dimensions

(Unit/mm)

Screwless Clamping Terminal Block Type

● 12 mm Width

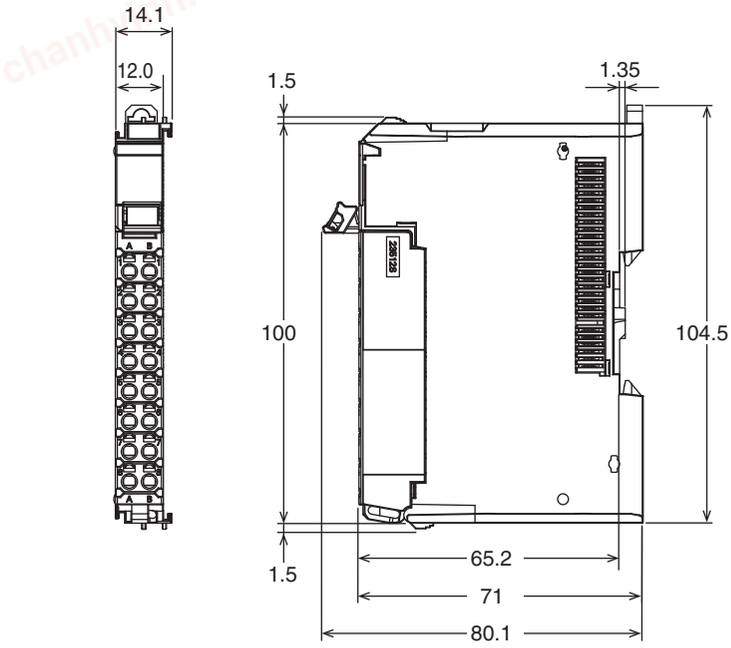

Units with MIL Connectors (1 Connector with 20 terminals)

● 30 mm Width

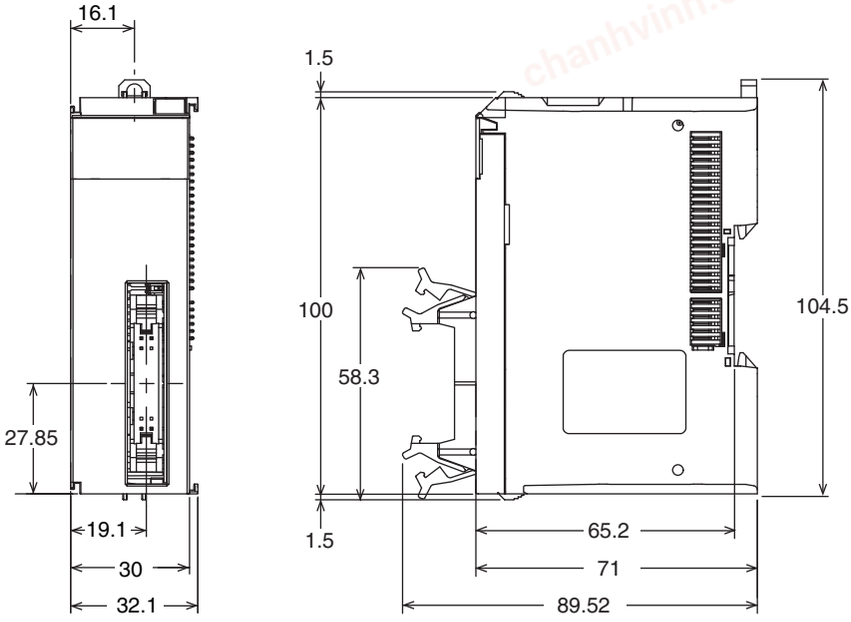

chanhvinh.com

Units with MIL Connectors (1 Connector with 40 terminals)

● 30 mm Width

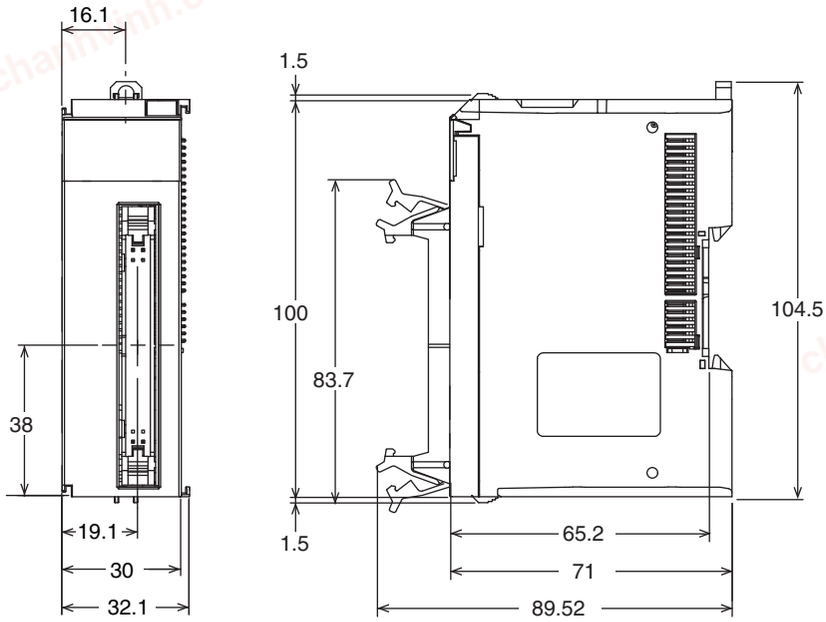

Related Manuals

Cat. No.	Model number	Manual name	Application	Description
W521	NX-ID□□□□ NX-IA□□□□ NX-OD□□□□ NX-OC□□□□ NX-MD□□□□	NX-series Digital I/O Units User's Manual	Learning how to use NX-series Digital I/O Units	The hardware, setup methods, and functions of the NX-series Digital I/O Units are described.

chanhvinh.com

Terms and Conditions Agreement

Read and understand this catalog.
Please read and understand this catalog before purchasing the products. Please consult your OMRON representative if you have any questions or comments.

Warranties.
(a) Exclusive Warranty. Omron's exclusive warranty is that the Products will be free from defects in materials and workmanship for a period of twelve months from the date of sale by Omron (or such other period expressed in writing by Omron). Omron disclaims all other warranties, express or implied.
(b) Limitations. OMRON MAKES NO WARRANTY OR REPRESENTATION, EXPRESS OR IMPLIED, ABOUT NON-INFRINGEMENT, MERCHANTABILITY OR FITNESS FOR A PARTICULAR PURPOSE OF THE PRODUCTS. BUYER ACKNOWLEDGES THAT IT ALONE HAS DETERMINED THAT THE
PRODUCTS WILL SUITABLY MEET THE REQUIREMENTS OF THEIR INTENDED USE.
Omron further disclaims all warranties and responsibility of any type for claims or expenses based on infringement by the Products or otherwise of any intellectual property right. (c) Buyer Remedy. Omron's sole obligation hereunder shall be, at Omron's election, to (i) replace (in the form originally shipped with Buyer responsible for labor charges for removal or replacement thereof) the non-complying Product, (ii) repair the non-complying Product, or (iii) repay or credit Buyer an amount equal to the purchase price of the non-complying Product; provided that in no event shall Omron be responsible for warranty, repair, indemnity or any other claims or expenses regarding the Products unless Omron's analysis confirms that the Products were properly handled, stored, installed and maintained and not subject to contamination, abuse, misuse or inappropriate modification. Return of any Products by Buyer must be approved in writing by Omron before shipment. Omron Companies shall not be liable for the suitability or unsuitability or the results from the use of Products in combination with any electrical or electronic components, circuits, system assemblies or any other materials or substances or environments. Any advice, recommendations or information given orally or in writing, are not to be construed as an amendment or addition to the above warranty.
See http://www.omron.com/global/ or contact your Omron representative for published information.

Limitation on Liability; Etc.
OMRON COMPANIES SHALL NOT BE LIABLE FOR SPECIAL, INDIRECT, INCIDENTAL, OR CONSEQUENTIAL DAMAGES, LOSS OF PROFITS OR PRODUCTION OR COMMERCIAL LOSS IN ANY WAY CONNECTED WITH THE PRODUCTS, WHETHER SUCH CLAIM IS BASED IN CONTRACT, WARRANTY, NEGLIGENCE OR STRICT LIABILITY.
Further, in no event shall liability of Omron Companies exceed the individual price of the Product on which liability is asserted.

Suitability of Use.
Omron Companies shall not be responsible for conformity with any standards, codes or regulations which apply to the combination of the Product in the Buyer's application or use of the Product. At Buyer's request, Omron will provide applicable third party certification documents identifying ratings and limitations of use which apply to the Product. This information by itself is not sufficient for a complete determination of the suitability of the Product in combination with the end product, machine, system, or other application or use. Buyer shall be solely responsible for determining appropriateness of the particular Product with respect to Buyer's application, product or system. Buyer shall take application responsibility in all cases.
NEVER USE THE PRODUCT FOR AN APPLICATION INVOLVING SERIOUS RISK TO LIFE OR PROPERTY OR IN LARGE QUANTITIES WITHOUT ENSURING THAT THE SYSTEM AS A WHOLE HAS BEEN DESIGNED TO ADDRESS THE RISKS, AND THAT THE OMRON PRODUCT(S) IS PROPERLY RATED AND INSTALLED FOR THE INTENDED USE WITHIN THE OVERALL EQUIPMENT OR SYSTEM.

Programmable Products.
Omron Companies shall not be responsible for the user's programming of a programmable Product, or any consequence thereof.

Performance Data.
Data presented in Omron Company websites, catalogs and other materials is provided as a guide for the user in determining suitability and does not constitute a warranty. It may represent the result of Omron's test conditions, and the user must correlate it to actual application requirements. Actual performance is subject to the Omron's Warranty and Limitations of Liability.

Change in Specifications.
Product specifications and accessories may be changed at any time based on improvements and other reasons. It is our practice to change part numbers when published ratings or features are changed, or when significant construction changes are made. However, some specifications of the Product may be changed without any notice. When in doubt, special part numbers may be assigned to fix or establish key specifications for your application. Please consult with your Omron's representative at any time to confirm actual specifications of purchased Product.

Errors and Omissions.
Information presented by Omron Companies has been checked and is believed to be accurate; however, no responsibility is assumed for clerical, typographical or proofreading errors or omissions.

2014.7

In the interest of product improvement, specifications are subject to change without notice.

OMRON Corporation
Industrial Automation Company

http://www.ia.omron.com/

(c)Copyright OMRON Corporation 2014 All Right Reserved.

chanhvinh.com

Mouser Electronics

Authorized Distributor

Click to View Pricing, Inventory, Delivery & Lifecycle Information:

Omron:

NX-ID4342 NX-ID3417 NX-ID3343 NX-ID5342 NX-ID4442 NX-ID3443 NX-ID5442 NX-ID3317

chanhvinh.com