chanhvinh.com

General-purpose Basic Switch

Z

CSM_Z_DS_E_4_5

Best-selling Basic Switch Boasting High Precision and Wide Variety

- A large switching capacity of 15 A with high repeat accuracy.
- A wide range of variations in contact form for your selection: basic, split-contact, maintained-contact, and adjustable contact gap types.
- A series of standard models for micro loads is available.
- A series of molded terminal-type models incorporating safety terminal protective cover is available.

⚠ Be sure to read *Safety Precautions* on page 26 and *Safety Precautions for All Basic Switches*.



For the most recent information on models that have been certified for safety standards, refer to your OMRON website.

Model Number Structure

Configuration

- Basic models
  - General-purpose — Refer to page 3.
  - Drip-proof
    - Without terminal protective cover — Refer to page 5.
    - With terminal protective cover — Refer to page 5.
    - Molded terminal — Refer to page 2.
- Split-contact models
  - General-purpose — Refer to page 4.
- Maintained-contact models
  - General-purpose — Refer to page 4.

Basic Models

General-purpose

- A variety of actuators is available for a wide range of application.
- The contact mechanism of models for micro loads is a crossbar type with gold-alloy contacts, which ensures highly reliable operations for micro loads.
- Contact Gap:
  - H2: 0.20 mm (extra-high-sensitivity)
  - H: 0.25 mm (high-sensitivity, micro voltage current load)
  - G: 0.5 mm (standard)
  - E: 1.8 mm (high-capacity)

Drip-proof

- These Switches use a rubber boot on the actuator and adhesive fill between the case and cover to increase resistance to drips.
- Models with drip-proof terminal protective covers and molded terminals with resin filling are also available.

Split-contact Models

- This type is identical in construction to the general-purpose basic switch except that it has two pairs of simultaneous acting contacts by splitting moving contacts.
- Since the moving contacts are connected to a common terminal, either parallel or series connection is possible.
- Highly reliable micro load switching is ensured if the model is used as a twin-contact switch.

Maintained-contact Models

- The maintained-contact type has a reset button at the bottom of the switch case, in addition to the pushbutton (plunger) located on the opposite side of the reset button. Use these buttons alternately.
- Since the Switch has greater pretravel than overtravel, it is suitable for use in reversible control circuits, manual reset circuits, safety limit circuits, and other circuits which are not preferable for automatic resetting. (For further details, refer to individual datasheets.)

chanhvinh.com

Model Number Legend

Basic Models

Z-□□□□-□
(1)(2)(3)(4) (5)

(1) Ratings

01 : 0.1 A (micro load)
15 : 15 A

(2) Contact Gap

H2 : 0.20 (extra-high-sensitivity)
H : 0.25 mm (high-sensitivity, micro load)
G : 0.5 mm (standard)
E : 1.8 mm (high-capacity)

(3) Actuator

None : Pin plunger
S : Slim spring plunger
D : Short spring plunger
K : Spring plunger (medium OP)
K3 : Spring plunger (high OP)
Q3 : Panel mount plunger (low OP)
Q : Panel mount plunger (medium OP)
Q8 : Panel mount plunger (high OP)
Q22 : Panel mount roller plunger
Q21 : Panel mount cross roller plunger
L : Leaf spring (high OF)
L2 : Roller leaf spring
W21 : Short hinge lever
W : Hinge lever (low OF)
W3 : Hinge lever (medium OF)
W32 : Hinge lever (high OF)
W4 : Low-force hinge lever
W44 : Long hinge lever
W78 : Low-force wire hinge lever (low OF)
W52 : Low-force wire hinge lever (high OF)
W22 : Short hinge roller lever
W2 : Hinge roller lever
W25 : Hinge roller lever (large roller)
W49 : Short hinge cross roller lever
W54 : Hinge cross roller lever
W2277 : Unidirectional short hinge roller lever (low OF)
M : Reverse hinge lever
M22 : Reverse short hinge roller lever
M2 : Reverse hinge roller lever
NJ : Flexible rod (high OF)
NJS : Flexible rod (low OF)

(4) Degree of Protection

None : General-purpose
55 : Drip-proof (not include the terminals)
A55 : Drip-proof (including the terminals)

(5) Terminals

None : Solder terminal
B : Screw terminal (with toothed washer)
B5V : Screw terminal with terminal cover (for Z-15G□A55 only)

Note: For combinations of models, *Ordering Information* on page 3 to 6.

Standard Models (Drip-proof Type/Molded Terminals)

Z-□55-M□□ □M
(1) (2)(3) (4)

(1) Drip-proof Type

(2) Lead Outlets

None : VSF
19 : VCT

(3) Directions of Lead Outlets (See following diagrams.)

L : Left
R : Right
D : Descending

L Type

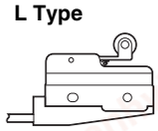

D Type

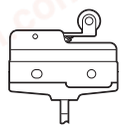

R Type

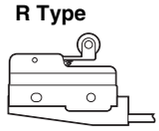

(4) Length of Lead Outlets

1 : 1 m
3 : 3 m

Split-contact Models

Z-10F□Y-B
(1)(2)(3)(4) (5)

(1) Ratings

10 : 10 A (split-contact models)

(2) Contact Gap

F : 1 mm (high-capacity)

(3) Actuator

None : Pin plunger
S : Slim spring plunger
D : Short spring plunger
Q : Panel mount plunger
Q22 : Panel mount roller plunger
W : Hinge lever
W22 : Short hinge roller lever
W2 : Hinge roller lever
M22 : Reverse short hinge roller lever

(4) Construction

Y : Split-contact models

(5) Terminals

B : Screw terminal (with toothed washer)

Maintained-contact Models

Z-15-E□R
(1) (2)(3)(4)

(1) Ratings

15 : 15 A

(2) Contact Gap

E : 1.8 mm (high capacity)

(3) Actuator

None : Pin plunger
S : Slim spring plunger
W : Hinge lever

(4) Structure

R : Maintained-contact models

chanhvinh.com

Ordering Information

Main Unit

Basic Models (General-purpose)

Actuator	Classification		Standard	High-sensitivity	Extra-high sensitivity	High-capacity	Micro load
	Contact gap		G (0.5 mm)	H (0.25 mm)	H2 (0.20 mm)	E (1.8 mm)	H (0.25 mm)
	Terminal *1		Model	Model	Model	Model	Model
Pin plunger			Z-15G	Z-15H	Z-15H2	Z-15E	Z-01H
			Z-15G-B	Z-15H-B	Z-15H2-B	Z-15E-B	Z-01H-B
Slim spring plunger			Z-15GS	Z-15HS	---	---	Z-01HS
			Z-15GS-B	Z-15HS-B			Z-01HS-B
Short spring plunger			Z-15GD	Z-15HD	---	Z-15ED	Z-01HD
			Z-15GD-B	Z-15HD-B		Z-15ED-B	Z-01HD-B
Panel mount plunger	Low OP		Z-15GQ3	---	---	---	---
			Z-15GQ3-B				
	Medium OP		Z-15GQ	Z-15HQ		Z-15EQ	Z-01HQ
			Z-15GQ-B	Z-15HQ-B		Z-15EQ-B	Z-01HQ-B
	High OP		Z-15GQ8	---		---	---
			Z-15GQ8-B				
Panel mount roller plunger			Z-15GQ22	Z-15HQ22	---	Z-15EQ22	---
			Z-15GQ22-B	Z-15HQ22-B		Z-15EQ22-B	
Panel mount cross roller plunger			Z-15GQ21	Z-15HQ21	---	Z-15EQ21	---
			Z-15GQ21-B	Z-15HQ21-B		Z-15EQ21-B	
Leaf spring			Z-15GL	---	---	---	---
			Z-15GL-B				
Roller leaf spring			Z-15GL2	---	---	---	---
			Z-15GL2-B				
Short hinge lever			Z-15GW21	---	---	---	---
			Z-15GW21-B				
Hinge lever	Low OP		Z-15GW	Z-15HW	---	---	---
			Z-15GW-B	Z-15HW-B			
	Medium OP		Z-15GW3	---			
			Z-15GW3-B				
	High OP		Z-15GW32				
			Z-15GW32-B				
Low-force hinge lever			Z-15GW4	Z-15HW24	---	---	---
			Z-15GW4-B	Z-15HW24-B			
Low-force wire hinge lever	Low OP		---	Z-15HW78	---	---	---
				Z-15HW78-B			
	High OP			Z-15HW52			
				Z-15HW52-B			
Short hinge roller lever			Z-15GW22	Z-15HW22	---	Z-15EW22	Z-01HW22
			Z-15GW22-B	Z-15HW22-B		Z-15EW22-B	Z-01HW22-B
Short hinge cross roller lever			Z-15GW49	---	---	---	---
			Z-15GW49-B				
Hinge roller lever	Stan-dard		Z-15GW2	Z-15HW2	---	---	---
			Z-15GW2-B	Z-15HW2-B			
	Large roller		Z-15GW25	---		---	---
			Z-15GW25-B				
Hinge cross roller lever			Z-15GW54	---	---	---	---
			Z-15GW54-B				
Unidirectional short hinge roller lever	Parallel		Z-15GW2277	---	---	---	---
			Z-15GW2277-B				
Reverse hinge lever *2			Z-15GM	---	---	---	---
			Z-15GM-B				
Reverse short hinge roller lever *2			Z-15GM22	---	---	---	---
			Z-15GM22-B				
Reverse hinge roller lever *2			Z-15GM2	---	---	---	---
			Z-15GM2-B				

*1. : Solder terminal : Screw terminal

*2. The pin plungers of reverse-type models are continuously pressed by the actuator levers with compression coil springs and the pin plungers are freed by operating the levers. Reverse-type models are highly vibration- and shock-resistive because the pin plungers are normally pressed.

chanhvinh.com

Minimum Order Lot

The following models are available at the minimum order lot specified below.
Orders must be placed per lot.

Classification / Actuator	Standard	High-sensitivity	Minimum order lot (pcs)
Short spring plunger	Z-15GD-B	—	10
Panel mount plunger	Z-15GQ Z-15GQ-B Z-15GQ8-B	—	
Panel mount roller plunger	Z-15GQ22 Z-15GQ22-B	—	
Panel mount cross roller plunger	Z-15GQ21-B	—	
Short hinge lever	Z-15GW21-B	—	
Hinge lever	Z-15GW Z-15GW-B	—	
Low-force hinge lever	Z-15GW4-B	Z-15HW24-B	
Low-force hinge wire lever	—	Z-15HW78-B	
Short hinge roller lever	Z-15GW22 Z-15GW22-B	—	
Hinge roller lever	Z-15GW2 Z-15GW2-B	—	
Reverse short hinge roller lever	Z-15GM22-B	—	
Reverse hinge roller lever	Z-15GM2-B	—	

Split-contact Models

Actuator	Contact gap F (1.0 mm) Terminal *1	Model
Pin plunger		---
		Z-10FY-B
Slim spring plunger		---
		Z-10FSY-B
Short spring plunger		---
		Z-10FDY-B
Panel mount plunger		---
		Z-10FQY-B
Panel mount roller plunger		---
		Z-10FQ22Y-B
Hinge lever		---
		Z-10FWY-B
Short hinge roller lever		---
		Z-10FW22Y-B
Hinge roller lever		---
		Z-10FW2Y-B
Reverse short hinge roller lever *2		---
		Z-10FM22Y-B

*1. : Solder terminal : Screw terminal

*2. The pin plungers of reverse-type models are continuously pressed by the actuator levers with compression coil springs and the pin plungers are freed by operating the levers. Reverse-type models are highly vibration- and shock-resistive because the pin plungers are normally pressed.

Maintained-contact Models

Actuator	Model
Pin plunger	Z-15ER
Slim spring plunger	Z-15ESR
Hinge lever	Z-15EWR

chanhvinh.com

Basic Models (Drip-proof Models Standard, Microload)

Actuator	Terminal *1	Classification	Standard		Micro load
		Contact gap	G (0.5 mm)		H (0.25 mm)
		Drip-proof terminal protective cover	Not provided	Provided	Not provided
			Model	Model	Model
Pin plunger			Z-15G55	---	Z-01H55
			Z-15G55-B	Z-15GA55-B5V	Z-01H55-B
Short spring plunger			Z-15GD55	---	Z-01HD55
			Z-15GD55-B		Z-01HD55-B
Spring plunger	Low OP		Z-15GK55	---	---
			Z-15GK55-B		
	High OP		Z-15GK355	---	---
			Z-15GK355-B	Z-15GK3A55-B5V	
Panel mount plunger			Z-15GQ55	---	---
			Z-15GQ55-B	Z-15GQA55-B5V	
Panel mount roller plunger			Z-15GQ2255	---	---
			Z-15GQ2255-B	Z-15GQ22A55-B5V	
Panel mount cross roller plunger			---	---	---
			Z-15GQ2155-B	Z-15GQ21A55-B5V	
Leaf spring			Z-15GL55	---	---
			Z-15GL55-B		
Roller leaf spring			Z-15GL255	---	---
			Z-15GL255-B		
Short hinge lever			Z-15GW2155	---	---
			Z-15GW2155-B		
Long hinge lever			Z-15GW4455	---	---
			Z-15GW4455-B	Z-15GW44A55-B5V	
Hinge lever			Z-15GW55	---	---
			Z-15GW55-B	Z-15GWA55-B5V	
Short hinge roller lever			Z-15GW2255	---	Z-01HW2255
			Z-15GW2255-B	Z-15GW22A55-B5V	Z-01HW2255-B
Hinge roller lever			Z-15GW255	---	---
			Z-15GW255-B	Z-15GW2A55-B5V	
Unidirectional short hinge roller lever			Z-15GW227755	---	---
			Z-15GW227755-B	Z-15GW2277A55-B5V	
Reverse hinge lever *2			Z-15GM55	---	---
			Z-15GM55-B		
Reverse short hinge roller lever *2			Z-15GM2255	---	---
			Z-15GM2255-B		
Reverse hinge roller lever *2			Z-15GM255	---	---
			Z-15GM255-B		
Flexible rod (coil spring) *3			Z-15GNJ55	---	---
			Z-15GNJ55-B		

*1. : Solder terminal : Screw terminal
*2. The pin plungers of reverse-type models are continuously pressed by the actuator levers with compression coil springs and the pin plungers are freed by operating the levers.
*3. The tip is made of resin.

Minimum Order Lot

The following models are available at the minimum order lot specified below.
Orders must be placed per lot.

Actuator	Classification / Contact gap	Standard G (0.5 mm)	Minimum order lot (pcs)
Short spring plunger		Z-15GD55-B	10
Spring plunger		Z-15GK55-B	
Hinge lever		Z-15GW4455-B Z-15GW55 Z-15GW55-B	
Short hinge roller lever		Z-15GW2255 Z-15GW2255-B	
Hinge roller lever		Z-15GW255-B	
Flexible rod (coil spring)		Z-15GNJ55-B	

chanhvinh.com

Basic Models (Drip-proof Models High-sensitivity)

Classification		High-sensitivity
Contact gap		H (0.25 mm)
Drip-proof terminal protective cover		Not provided
Actuator	Terminal *	Model
Flexible rod (steel wire)	Solder terminal	Z-15HNJS55
	Screw terminal	Z-15HNJS55-B

* Solder terminal : Screw terminal

Minimum Order Lot

The following models are available at the minimum order lot specified below.
Orders must be placed per lot.

Classification		High-sensitivity	Minimum order lot (pcs)
Actuator	Contact gap	H (0.25 mm)	
Flexible rod (steel wire)		Z-15HNJS55-B	10

Specifications

Ratings (Basic, Split-contact and Maintained contact Models)

Z-15 (Except Micro Load and Flexible Rod Models)

Item		Non-inductive load (A)				Inductive load (A)			
		Resistive load		Lamp load		Inductive load		Motor load	
Contact gap	Rated voltage	NC	NO	NC	NO	NC	NO	NC	NO
G, H, H2, E	125 VAC	15 (10) *		3	1.5	15 (10) *		5	2.5
	250 VAC	15 (10) *		2.5	1.25	15 (10) *		3	1.5
	500 VAC*	10		1.5	0.75	6		1.5	0.75
G	8 VDC	15		3	1.5	15		5	2.5
	14 VDC	15		3	1.5	10		5	2.5
	30 VDC	6		3	1.5	5		5	2.5
	125 VDC	0.5		0.5	0.5	0.05		0.05	0.05
	250 VDC	0.25		0.25	0.25	0.03		0.03	0.03
H, H2	8 VDC	15		3	1.5	15		5	2.5
	14 VDC	15		3	1.5	10		5	2.5
	30 VDC	2		2	1.4	1		1	1
	125 VDC	0.4		0.4	0.4	0.03		0.03	0.03
	250 VDC	0.2		0.2	0.2	0.02		0.02	0.02
E	8 VDC	15		3	1.5	15		5	2.5
	14 VDC	15		3	1.5	15		5	2.5
	30 VDC	15		3	1.5	10		5	2.5
	125 VDC	0.75		0.75	0.75	0.4		0.4	0.4
	250 VDC	0.3		0.3	0.3	0.2		0.2	0.2

* Figures in parentheses are for the Z-15HW52, Z-15HW78(-B) and Z-15H2(-B) models, the AC ratings of these models are 125 and 250 V only.

Z-15 (Flexible Rod Models)

Rated voltage	Non-inductive load (A)				Inductive load (A)			
	Resistive load		Lamp load		Inductive load		Motor load	
	NC	NO	NC	NO	NC	NO	NC	NO
125 VAC	15		2	1	7		2.5	2
250 VAC	15		1	0.5	5		1.5	1
8 VDC	15		2	1	7		3	1.5
14 VDC	15		2	1	7		3	1.5
30 VDC	2		2	1	1		1	0.5
125 VDC	0.4		0.4	0.4	0.03		0.03	0.03
250 VDC	0.2		0.2	0.2	0.02		0.02	0.02

Z-10F

Item		Non-inductive load (A)				Inductive load (A)			
		Resistive load		Lamp load		Inductive load		Motor load	
Contact gap	Rated voltage	NC	NO	NC	NO	NC	NO	NC	NO
Series connection	125 VAC	10		4	2	6		5	2.5
	250 VAC	10		2.5	1.5	6		3	1.5
	30 VDC	10		4	2	6		6	3
	125 VDC	1		1	1	0.1		0.1	0.1
	250 VDC	0.6		0.6	0.6	0.05		0.05	0.05
Parallel connection	125 VAC	6		3	1.5	4		4	2
	250 VAC	6		2.5	1.25	4		2	1
	30 VDC	6		4	2	4		6	3
	125 VDC	0.6		0.6	0.6	0.1		0.1	0.1
	250 VDC	0.3		0.3	0.3	0.05		0.05	0.05

Z-01H

Rated voltage	Resistive load (A)	
	NC	NO
125 VAC	0.1	
8 VDC	0.1	
14 VDC	0.1	
30 VDC	0.1	

Note: 1. The above current ratings are the values of the steady-state current.
2. Inductive load has a power factor of 0.4 min. (AC) and a time constant of 7 ms max. (DC).
3. Lamp load has an inrush current of 10 times the steady-state current.
4. Motor load has an inrush current of 6 times the steady-state current.
5. The normally closed and normally open ratings of reverse hinge lever models are opposite to each other.
6. The AC ratings of molded terminals are 125 and 250 V only.
7. The ratings values apply under the following test conditions:
(1) Ambient temperature: 20±2°C
(2) Ambient humidity: 65±5%RH
(3) Operating frequency: 20 operations/min

Use the switch within the operating range.

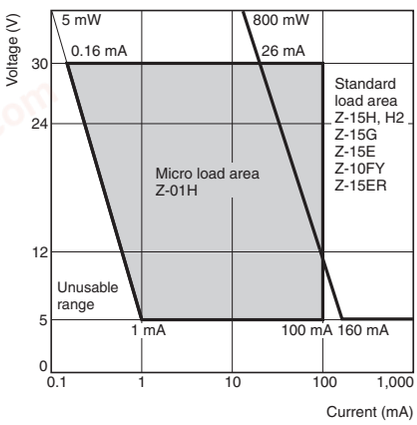

	Z-01H	Z-15□, Z-10FY
Minimum applicable load	5 VDC 1 mA	5 VDC 160 mA

chanhvinh.com

Certified Standard Ratings

Ask your OMRON representative for information on certified models.

UL/CSA (General ratings only)

Rated voltage / Model	Z-15	Z-10F	Z-01H
125 VAC	15A 1/8HP	6A 1/10HP	0.1A
250 VAC	15A 1/4HP	6A 1/8HP	---
480 VAC	15A	6A	---
30 VDC	---	---	0.1A
125 VDC	0.5A	0.6A	---
250 VDC	0.25A	0.3A	---

TÜV (EN61058-1)

Rated voltage / Model	Z-15H□	Z-15G□	Z-01H□
250 VAC	15 A	15 A	---
125 VAC	---	---	0.1 A
30 VDC	---	---	0.1 A

CCC (GB/T14048.5)

Rated voltage / Model	Z-15H□	Z-15G□	Z-01H□
250 VAC	15 A	15 A	---
125 VAC	---	---	0.1 A
30 VDC	---	---	0.1 A

Characteristics

Item	Classification	Z-15 (except micro load and flexible rod)	Z-01H	Z-15 (flexible rod)	Z-10F	Z-15H2
Operating speed		0.01 mm to 1 m/s *1		1 mm to 1 m/s	0.1 mm to 1 m/s *1	0.01 mm to 1 m/s
Operating frequency	Mechanical	240 operations/min		120 operations/min	240 operations/min	240 operations/min
	Electrical	20 operations/min				
Insulation resistance		100 MΩ min. (at 500 VDC)				
Contact resistance		15 mΩ max. (initial value)	50 mΩ max. (initial value)	15 mΩ max. (initial value)	25 mΩ max. (initial value)	15 mΩ max. (initial value)
Dielectric strength		Between contacts of same polarity Contact gap G: 1,000 VAC, 50/60 Hz for 1 min Contact gap H: 600 VAC, 50/60 Hz for 1 min Contact gap E: 1,500 VAC, 50/60 Hz for 1 min		Between contacts of same polarity Contact gap G: 1,000 VAC, 50/60 Hz for 1 min Contact gap H: 600 VAC, 50/60 Hz for 1 min	Between contacts of same polarity Contact gap F: 1,500 VAC, 50/60 Hz for 1 min	Between contacts of same polarity 600VAC, 50/60Hz for 1min
		Between current-carrying metal parts and ground, and between each terminal and non-current-carrying metal parts 2,000 VAC, 50/60 Hz for 1 min				
Vibration resistance	Malfunction	10 to 55 Hz, 1.5-mm double amplitude *5		10 to 20 Hz, 1.5-mm double amplitude *5	10 to 55 Hz, 1.5-mm double amplitude *5	
Shock resistance	Destruction	1,000 m/s² max.				
	Malfunction	300 m/s² max. *2 *5		50 m/s² max. *5	300 m/s² max. *3 *5	100 m/s² max.
Durability	Mechanical	Contact gap G, H: 20,000,000 operations min. Contact gap E: 300,000 operations		1,000,000 operations min.	500,000 operations min. *1	20,000,000 operations min.
	Electrical	Contact gap G, H: 500,000 operations min. Contact gap E: 100,000 operations min.		100,000 operations min.	100,000 operations min.	500,000 operations min.
Degree of protection	General-purpose	IP00				
	Drip-proof	Equivalent to IP62 (except terminals)				
Degree of protection against electric shock		Class I				
Proof tracking index (PTI)		175				
Ambient operating temperature	General-purpose	–25°C to 80°C (with no icing)				
	Drip-proof	–15°C to 80°C (with no icing)				
Ambient operating humidity	General-purpose	35% to 85%RH				
	Drip-proof	35% to 95%RH				
Weight		Approx. 22 to 58 g		Approx. 42 to 48 g	Approx. 34 to 61 g	Approx. 22 g

*1. The values are for the plunger models. (For the lever models, the values are at the plunger section.) (Consult your OMRON representative for other models.)
*2. The values are for the Z-15G pin plunger.
*3. The values are for the Z-10FY-B.
*4. The values are for the pin plunger. The durability for models other than the pin plunger is 10,000,000 min.
*5. Malfunction: 1 ms max.

Contacts Specification

Item	Classification	Z-15	Z-01H	Z-10F
Contacts	Shape	Rivet	Single crossbar	Rivet
	Material	Silver	Gold alloy	Silver
Inrush current	NC	30 A max.	0.1 A max.	40 A max.
	NO	15 A max.	0.1 A max.	20 A max.

Engineering Data

Mechanical Durability (Z-15G)

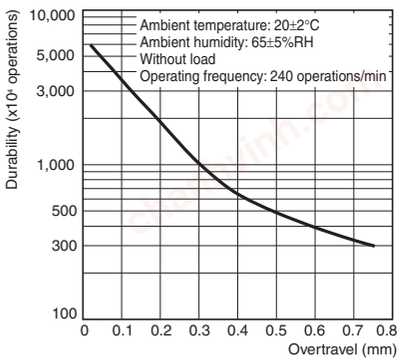

Electrical Durability (Z-15G)

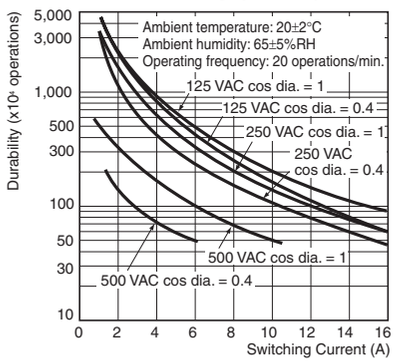

chanhvinh.com

Structure

Basic Models

Contact Form (SPDT)

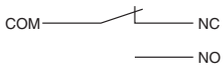

Note: The Z-15GM is a reversible model and the NO and NC positions are reversed.

Molded Terminals

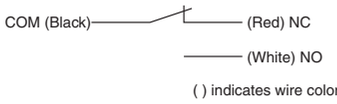

( ) indicates wire color.

Note: The Z-15GM is a reversible model and the NO and NC positions are reversed.

Structure

Drip-proof Construction

• Without Terminal Protective Cover

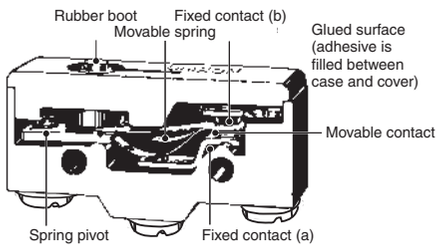

• With Terminal Protective Cover

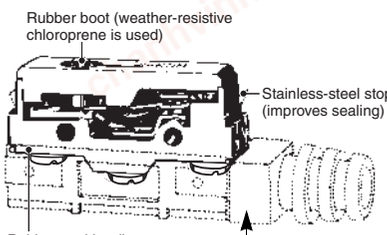

Terminal protective covers are sold separately for maintenance purposes, which can be, however, used with the Z-□-B5V models only. For details, refer to page 22.

Split-contact Models

Contact Form

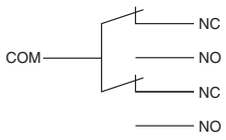

Note: The NO and NC terminal arrangement is reversed for Models with reverse operation (Z-10FM).

Connection Example

Series Connection

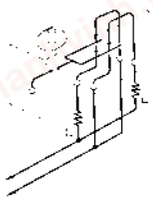

Parallel Connection

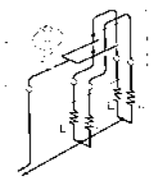

Maintained-contact Models

Contact Form

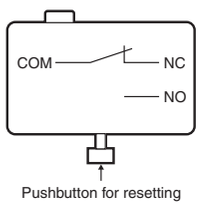

chanhvinh.com

Dimensions

(Unit: mm)

Mounting

Use M4 screws with plane washers and spring washers to mount the Switch. Tighten each mounting screw securely to a torque of 1.18 to 1.47 N·m.

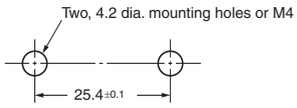

When mounting the Switch to a panel, use a tightening torque of 2.94 to 4.9 N·m for the hexagonal nuts on the actuator.

Panel Mount Plunger

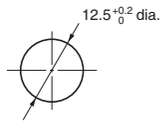

Panel Mount Roller Plunger

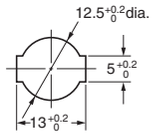

Basic Models General-purpose and Split-contact Models

Terminals

Basic Models

Screw Terminals (-B)

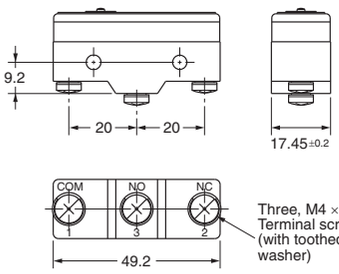

Appropriate terminal screw tightening torque: 0.78 to 1.18 N·m.

Solder Terminal (-A) ("-A" is not included in the model numbers.)

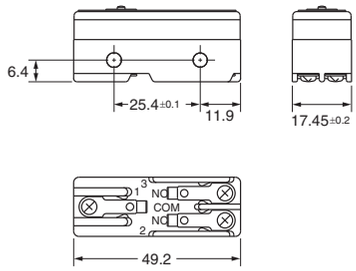

Note: With reverse action models (Z-15GM), the positions of NO and NC terminals are reversed.

Split-contact Models

Screw Terminals (Y-B)

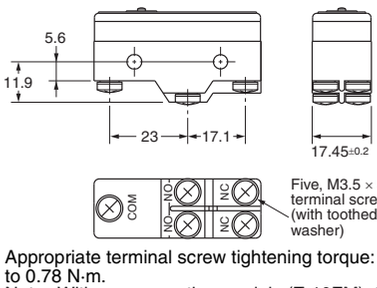

Appropriate terminal screw tightening torque: 0.49 to 0.78 N·m.

Note: With reverse action models (Z-10FM), the positions of NO and NC terminals are reversed.

Dimensions and Operating Characteristics

The models, illustrations, and graphics are for screw-terminal models (-B). The "-A" at the end of the model number for solder terminal models has been omitted. For details of the terminals, see above.

Pin Plunger

Z-15G-B Z-15E-B
Z-15H2-B Z-01H-B
Z-15H-B Z-10FY-B



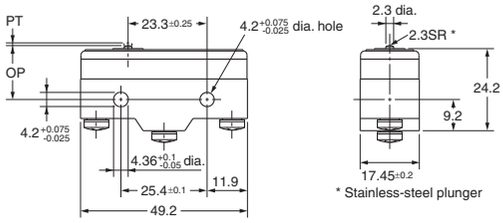

Operating Characteristics	Model	Z-15G-B	Z-15H2-B	Z-15H-B	Z-15E-B	Z-01H-B	Z-10FY-B
Operating force	OF	2.45 to 3.43 N	1.96 to 2.5 N	1.96 to 2.75 N	6.12 to 7.85 N	2.45 N max.	4.46 to 7.26 N
Release force	RF min.	1.12 N	1.12 N	1.12 N	1.12 N	0.78 N	1.12 N
Pretravel	PT max.	0.4 mm	0.3 mm	0.3 mm	0.8 mm	0.5 mm	0.8 mm
Overtravel	OT min.	0.13 mm	0.13 mm	0.13 mm	0.13 mm	0.13 mm	0.13 mm
Movement Differential	MD max.	0.05 mm	0.005 to 0.008 mm	0.025 mm	0.13 mm	0.04 mm	0.1 mm
Operating Position	OP	15.9±0.4 mm					

Slim Spring Plunger

Z-15GS-B Z-01HS-B
Z-15HS-B Z-10FSY-B

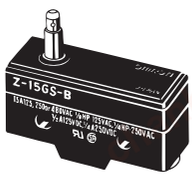

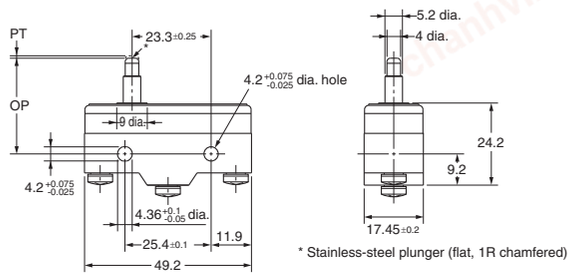

	Z-15GS-B	Z-15HS-B	Z-01HS	Z-10FSY-B
OF	2.45 to 3.43 N	1.96 to 2.79 N	2.45 N max.	4.46 to 7.26 N
RF min.	1.12 N	1.12 N	0.78 N	1.12 N
PT max.	0.4 mm	0.3 mm	0.5 mm	0.8 mm
OT min.	1.6 mm	1.6 mm	1.6 mm	1.6 mm
MD max.	0.05 mm	0.025 mm	0.05 mm	0.1 mm
OP	28.2±0.5 mm			

Note: Unless otherwise specified, a tolerance of ±0.4 mm applies to all dimensions.

chanhvinh.com

Short Spring Plunger

Z-15GD-B Z-01HD-B
Z-15HD-B Z-10FDY-B
Z-15ED-B

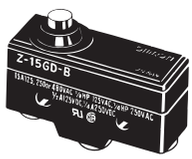

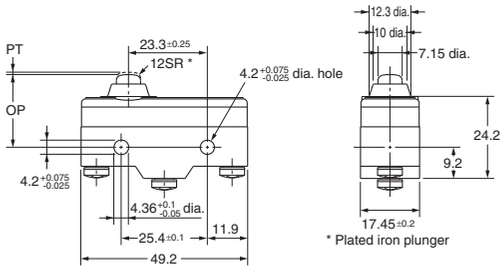

	Z-15GD-B	Z-15HD-B	Z-15ED-B	Z-01HD-B	Z-10FDY-B
OF	2.45 to 3.43 N	1.96 to 2.79 N	6.13 to 7.85 N	2.45 N max.	4.46 to 7.26 N
RF min.	1.12 N	1.12 N	1.12 N	0.78 N	1.12 N
PT max.	0.4 mm	0.3 mm	0.8 mm	0.5 mm	0.8 mm
OT min.	1.6 mm	1.6 mm	1.6 mm	1.6 mm	1.6 mm
MD max.	0.05 mm	0.025 mm	0.13 mm	0.05 mm	0.1 mm
OP	21.5±0.5 mm				

Panel Mount Plunger

Z-15GQ-B Z-01HQ-B
Z-15HQ-B Z-10FQY-B
Z-15EQ-B Z-15GQ3-B *
Z-15GQ8-B *

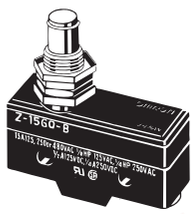

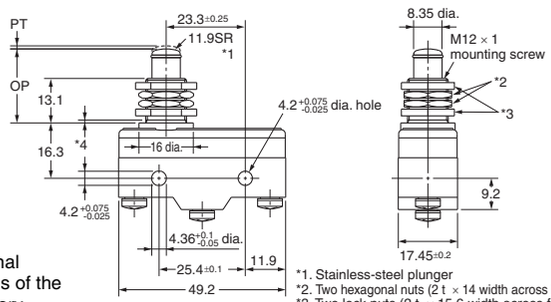

* The external dimensions of the actuator vary.

*1. Stainless-steel plunger
*2. Two hexagonal nuts (2 t × 14 width across flats)
*3. Two lock nuts (2 t × 15.6 width across flats)
*4. Incomplete screw part with a maximum length of 1.5 mm.

Note: 1. Do not use the M12 mounting screw and the case mounting hole at the same time, or excessive pulling force will be imposed on the switch and the case and cover may be damaged.
2. On the model Z-15GQ3-B, PT can be set to a value larger than that for the Z-15GQ.
3. On the model Z-15GQ8-B, operating position can be adjusted by providing a screw in the plunger section.
4. On the model Z-15GQ8-B, the M3 hole with a depth of 10 mm is a through hole. Take precautions so that no water or screw lock agent penetrates into the hole.

	Z-15GQ-B	Z-15HQ-B	Z-15EQ-B	Z-01HQ-B	Z-10FQY-B	Z-15GQ3-B	Z-15GQ8-B
OF	2.45 to 3.43 N	1.96 to 2.79 N	6.13 to 7.85 N	2.45 N max.	4.46 to 7.26 N	2.45 to 3.43 N	2.45 to 3.43 N
RF min.	1.12 N	1.12 N	1.12 N	0.78 N	1.12 N	1.12 N	1.12 N
PT max.	0.4 mm	0.3 mm	0.8 mm	0.5 mm	0.8 mm	4.2 mm	0.5 mm
OT min.	5.5 mm	5.5 mm	5.5 mm	5.5 mm	5.5 mm	2.5 mm	5.5 mm
MD max.	0.05 mm	0.025 mm	0.13 mm	0.05 mm	0.1 mm	2.2 mm	0.05 mm
OP	21.8±0.8 mm					18.8±0.8 mm	32.5±1 mm

Panel Mount Roller Plunger

Z-15GQ22-B Z-15EQ22-B
Z-15HQ22-B Z-10FQ22Y-B

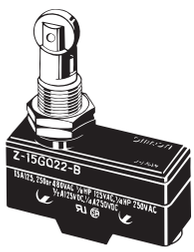

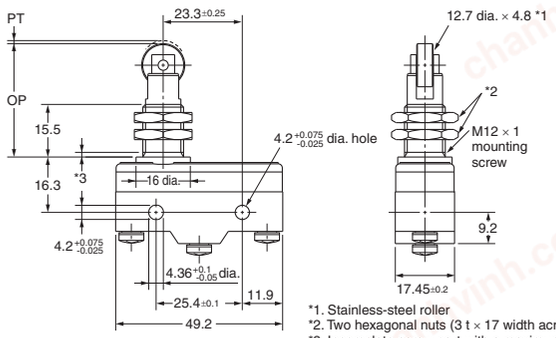

*1. Stainless-steel roller
*2. Two hexagonal nuts (3 t × 17 width across flats)
*3. Incomplete screw part with a maximum length of 1.5 mm.

Note: Do not use the M12 mounting screw and the case mounting hole at the same time, or the case may be damaged.

	Z-15GQ22-B	Z-15HQ22-B	Z-15EQ22-B	Z-10FQ22Y-B
OF	2.45 to 3.43 N	1.96 to 2.79 N	6.13 to 7.85 N	4.46 to 7.26 N
RF min.	1.12 N	1.12 N	1.12 N	1.12 N
PT max.	0.4 mm	0.3 mm	0.8 mm	1 mm
OT min.	3.58 mm	3.58 mm	3.58 mm	3.55 mm
MD max.	0.05 mm	0.025 mm	0.13 mm	0.1 mm
OP	33.4±1.2 mm			

Note: Unless otherwise specified, a tolerance of ±0.4 mm applies to all dimensions.

chanhvinh.com

Panel Mount Cross Roller Plunger
Z-15GQ21-B Z-15EQ21-B
Z-15HQ21-B

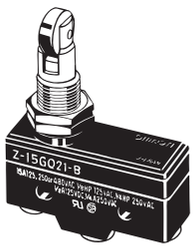

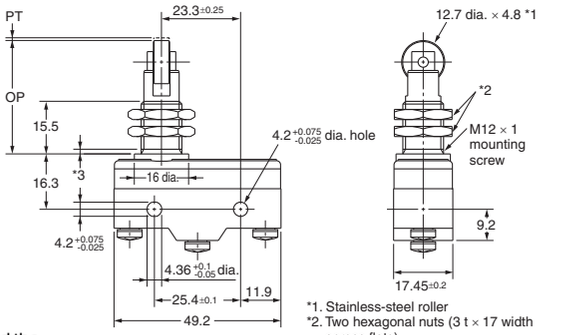

*1. Stainless-steel roller
*2. Two hexagonal nuts (3 t × 17 width across flats)
*3. Incomplete screw part with a maximum length of 1.5 mm.

Note: Do not use the M12 mounting screw and the case mounting hole at the same time, or the case may be damaged.

	Z-15GQ21-B	Z-15HQ21-B
OF	2.45 to 3.43 N	1.96 to 2.79 N
RF min.	1.12 N	1.12 N
PT max.	0.4 mm	0.3 mm
OT min.	3.58 mm	3.58 mm
MD max.	0.05 mm	0.025 mm
OP	33.4±1.2 mm	

	Z-15EQ21-B
OF	6.13 to 7.85 N
RF min.	1.12 N
PT max.	0.8 mm
OT min.	3.58 mm
MD max.	0.13 mm
OP	33.4±1.2 mm

Leaf Spring
Z-15GL-B

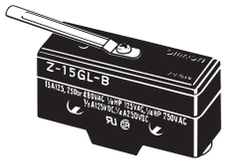

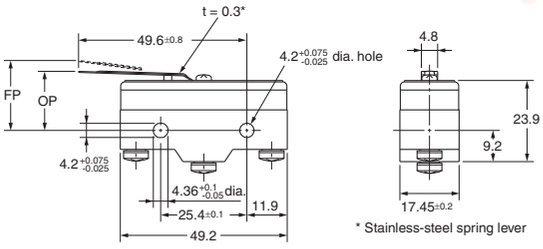

* Stainless-steel spring lever

OF max.	1.38 N
RF min.	0.14 N
OT *min.	1.6 mm
MD max.	1.3 mm
FP max.	20.6 mm
OP	17.4±0.8 mm

* When operating, be sure not to exceed 1.6 mm.

Roller Leaf Spring
Z-15GL2-B

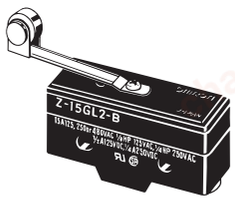

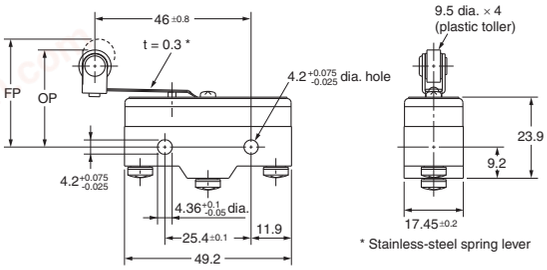

* Stainless-steel spring lever

OF max.	1.38 N
RF min.	0.14 N
OT *min.	1.6 mm
MD max.	1.3 mm
FP max.	31.8 mm
OP	28.6±0.8 mm

* When operating, be sure not to exceed 1.6 mm.

Short Hinge Lever
Z-15GW21-B

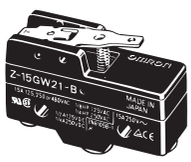

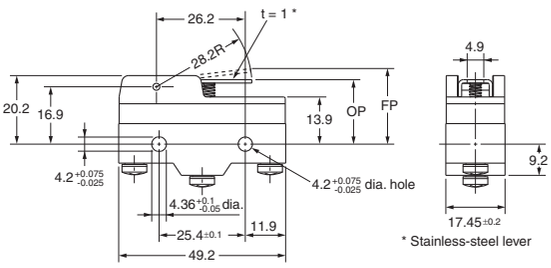

* Stainless-steel lever

OF max.	1.57 N
RF min.	0.27 N
OT min.	2 mm
MD max.	1 mm
FP max.	24.8 mm
OP	19±0.8 mm

Hinge Lever
Z-15GW-B Z-15GW32-B
Z-15HW-B Z-10FWY-B
Z-15GW3-B (Lever Length: 56R)*

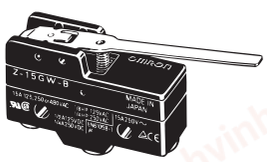

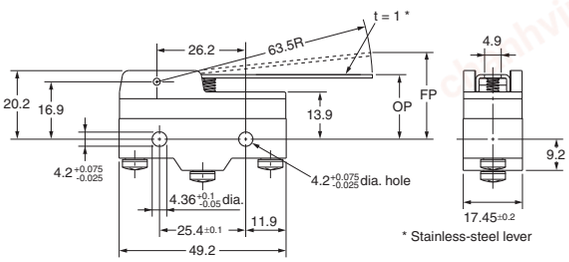

* Stainless-steel lever

* The external dimensions of the actuator vary.

	Z-15GW-B	Z-15HW-B	Z-15GW32-B	Z-10FWY-B	Z-15GW3-B
OF	0.69 N max.	0.66 N max.	1.47 to 1.96 N	0.88 N max.	0.78 N max.
RF min.	0.14 N	0.14 N	0.92 N	0.14 N	0.15 N
OT min.	5.6 mm	5.6 mm	5.6 mm	5.6 mm	4.8 mm
MD max.	1.27 mm	0.63 mm	1.27 mm	2.4 mm	1.12 mm
FP max.	28.2 mm	27.4 mm	28.2 mm	29.8 mm	27.2 mm
OP	19±0.8 mm				

Note: Unless otherwise specified, a tolerance of ±0.4 mm applies to all dimensions.

chanhvinh.com

Low-force Hinge Lever
Z-15GW4-B

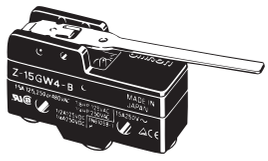

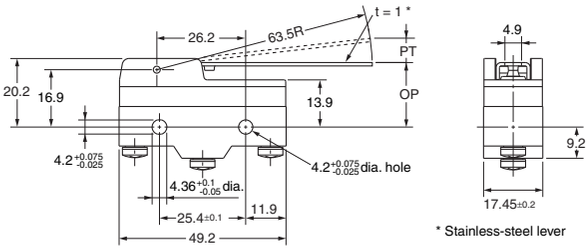

OF max.	274 mN
RF min.	34.3 mN
PT max.	10 mm
OT min.	5.6 mm
MD max.	1.27 mm
OP	19±0.8mm

Z-15HW24-B

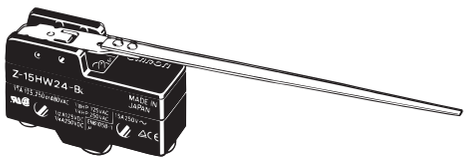

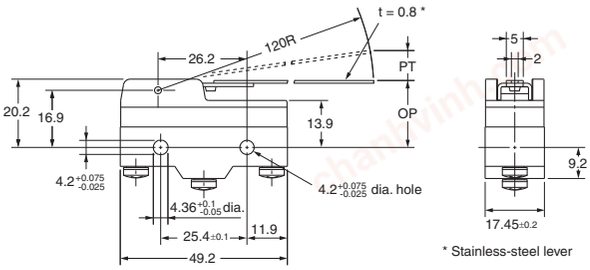

OF max.	58.8 mN
RF min.	4.90 mN
PT max.	19.8 mm
OT min.	10 mm
MD max.	2 mm
OP	19.8±1.6 mm

Low-force Wire Hinge Lever
Z-15HW52-B
Z-15HW78-B (Lever Length: 110R) *

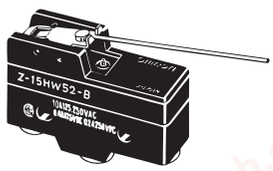

* The external dimensions of the actuator vary.

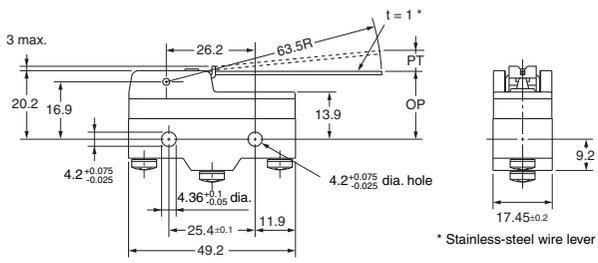

	Z-15HW52-B
OF max.	58.8 mN
RF min.	4.90 mN
PT max.	8.3 mm
OT min.	5.6 mm
MD max.	0.65 mm
OP	19±1 mm

	Z-15HW78-B
OF max.	39.2 mN
RF min.	2.94 mN
PT max.	10 mm
OT min.	6 mm
MD max.	3 mm
OP	20±1 mm

Note: AC electrical ratings: 10 A, 125/250 V.

Short Hinge Roller Lever
Z-15GW22-B Z-01HW22-B
Z-15HW22-B Z-10FW22Y-B
Z-15EW22-B
Z-15GW2-B * Z-15HW2-B *
Z-10FW2Y-B *

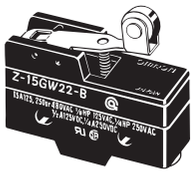

* The external dimensions of the actuator vary. (Lever Length: 48.5R)

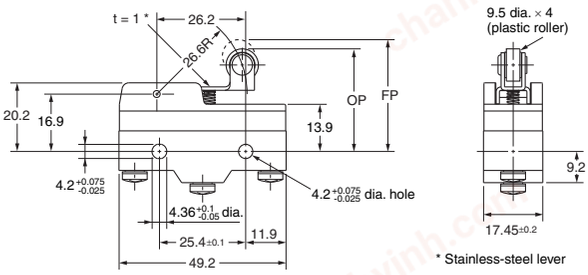

	Z-15GW22-B	Z-15HW22-B	Z-15EW22-B	Z-01HW22-B	Z-10FW22Y-B	Z-15GW2-B	Z-15HW2-B	Z-10FW2Y-B
OF max.	1.57 N	1.47 N	1.94 N	1.57 N	2.45 N	0.98 N	0.84 N	1.27 N
RF min.	0.41 N	0.41 N	0.41 N	0.27 N	0.34 N	0.22 N	0.22 N	0.22 N
OT min.	2.4 mm	2.4 mm	2.4 mm	2.4 mm	2.4 mm	4 mm	4 mm	4 mm
MD max.	0.5 mm	0.45 mm	1.3 mm	0.5 mm	1 mm	1.02 mm	0.6 mm	2 mm
FP max.	32.5 mm		35.1 mm	32.5 mm	34.8 mm	36.5 mm		37.4 mm
OP	30.2±0.4 mm		30.2±0.4 mm	30.2±0.4 mm	30.2±0.4 mm	30.2±0.8 mm		30.2±0.8 mm

Note: Unless otherwise specified, a tolerance of ±0.4 mm applies to all dimensions.

chanhvinh.com

Short Hinge Cross Roller Lever
Z-15GW49-B
Z-15GW54-B (Lever Length: 48.7R) *

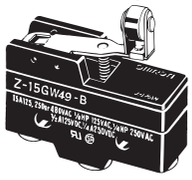

* The external dimensions of the actuator vary.

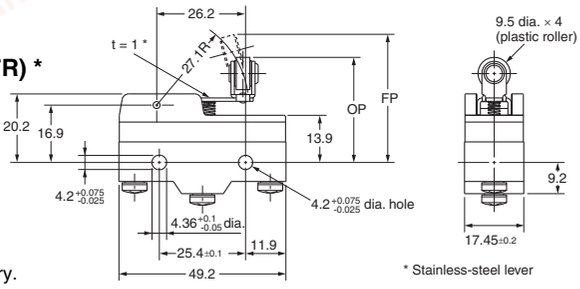

	Z-15GW49-B	Z-15GW54-B
OF max.	1.67 N	0.98 N
RF min.	0.41 N	0.22 N
OT min.	2.4 mm	4 mm
MD max.	0.51 mm	1 mm
FP max.	33.3 mm	37.3 mm
OP	31±0.4 mm	31±0.8 mm

Hinge Roller Lever
Z-15GW25-B

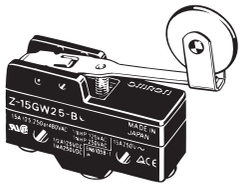

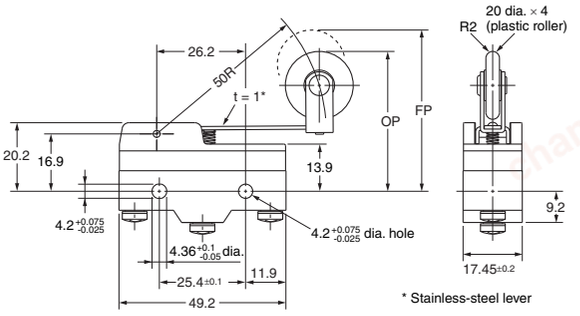

OF max.	0.98 N
RF min.	0.21 N
OT min.	4 mm
MD max.	1.6 mm
FP max.	47.5 mm
OP	41.2±0.8 mm

Unidirectional Short Hinge Roller Lever
Z-15GW2277-B

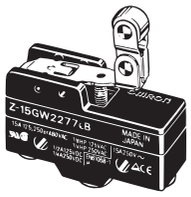

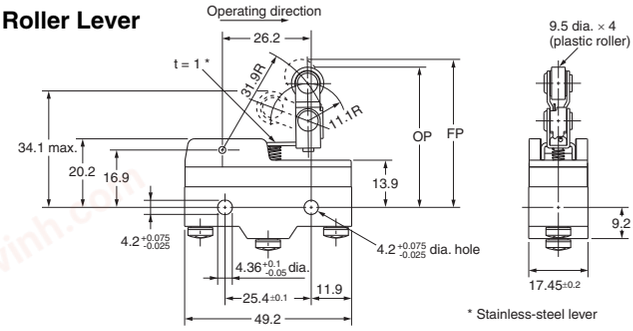

OF max.	1.67 N
RF min.	0.41 N
OT min.	2.4 mm
MD max.	0.51 mm
FP max.	43.6 mm
OP	41.3±0.8 mm

Reverse Hinge Lever **
Z-15GM-B

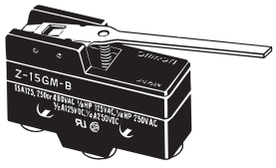

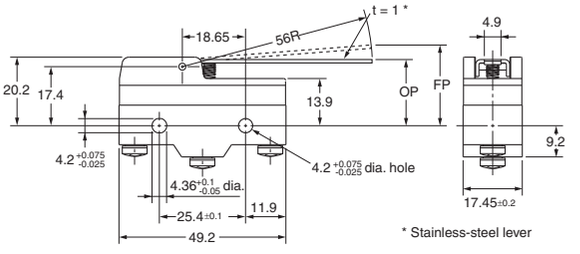

OF max.	1.67 N
RF min.	0.27 N
OT min.	5.6 mm
MD max.	0.89 mm
FP max.	23.8 mm
OP	19±0.8 mm

Reverse Short Hinge Roller Lever **
Z-15GM22-B
Z-10FM22Y-B

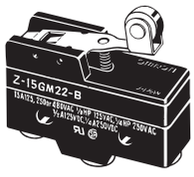

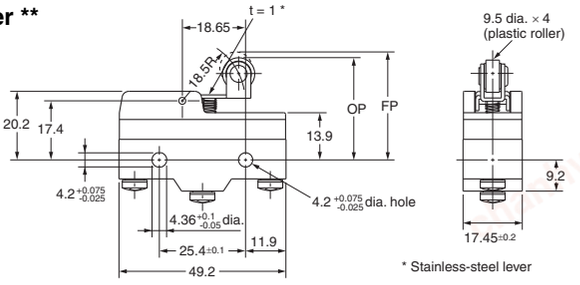

	Z-15GM22-B	Z-10FM22Y-B
OF max.	5.28 N	6.37 N
RF min.	1.67 N	1.67 N
OT min.	2 mm	2 mm
MD max.	0.28 mm	0.56mm
FP max.	31.8 mm	33 mm
OP	29.4±0.4 mm	29.4±0.4 mm

Reverse Hinge Roller Lever **
Z-15GM2-B

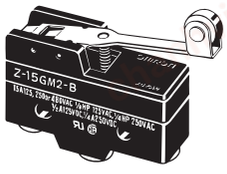

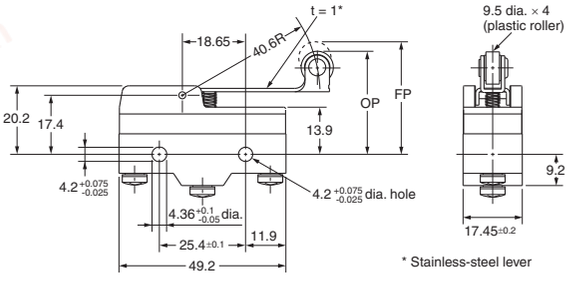

OF max.	2.35 N
RF min.	0.55 N
OT min.	4 mm
MD max.	0.64 mm
FP max.	35 mm
OP	30.2±0.8 mm

** The pin plungers of reverse-type models are continuously pressed by the actuator levers with compression coil springs and the pin plungers are freed by operating the levers. Reverse-type models are highly vibration- and shock-resistive because the pin plungers are normally pressed.

Note: Unless otherwise specified, a tolerance of ±0.4 mm applies to all dimensions.

chanhvinh.com

Basic Models (Drip-proof) without Terminal Protective Cover

Terminals (Molded Terminals: Refer to page 21.)

Without Terminal Protective Cover

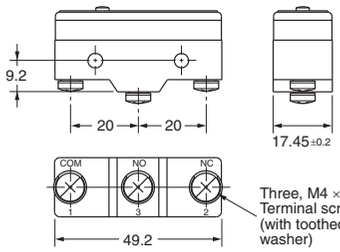

Note: With reverse action models (Z-15GM), the positions of NO and NC terminals are reversed.

Dimensions and Operating Characteristics

The above illustration is for model without terminal protective cover.

Pin Plunger
Z-15G55-B
Z-01H55-B



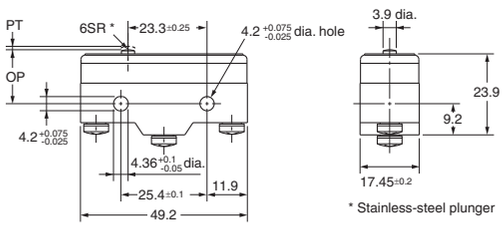

	Z-15G55-B	Z-01H55-B
OF	2.45 to 4.22 N	3.43 N max.
RF min.	1.12 N	0.78 N
PT max.	2.2 mm	2.2 mm
OT min.	0.13 mm	0.13 mm
MD max.	0.06 mm	0.06 mm
OP	15.9±0.4 mm	

Short Spring Plunger
Z-15GD55-B
Z-01HD55-B



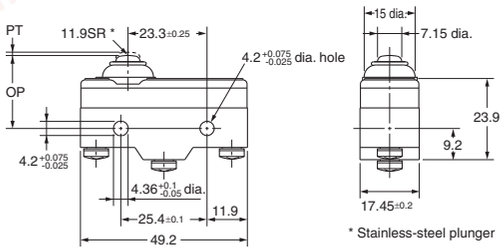

	Z-15GD55-B	Z-01HD55-B
OF max.	5.30 N	3.63 N
RF min.	1.12 N	0.78 N
PT max.	1.8 mm	1.9 mm
OT min.	1.6 mm	1.6 mm
MD max.	0.06 mm	0.06 mm
OP	21.5±0.5 mm	

Spring Plunger
Z-15GK55-B



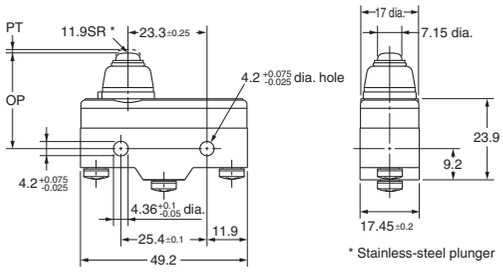

OF max.	5.30 N
RF min.	1.12 N
PT max.	2.3 mm
OT min.	1.6 mm
MD max.	0.06 mm
OP	28.2±0.5 mm

Z-15GK355-B

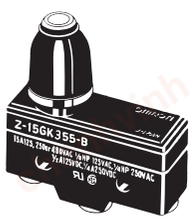

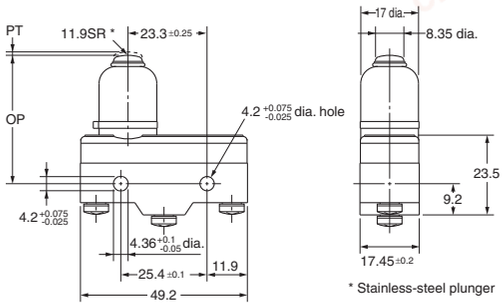

OF max.	5.30 N
RF min.	1.12 N
PT max.	2.4 mm
OT min.	3.5 mm
MD max.	0.06 mm
OP	37.8±1.2 mm

Note: Unless otherwise specified, a tolerance of ±0.4 mm applies to all dimensions.

chanhvinh.com

Panel Mount Plunger
Z-15GQ55-B

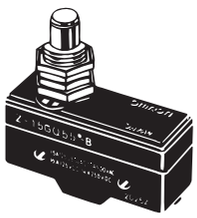

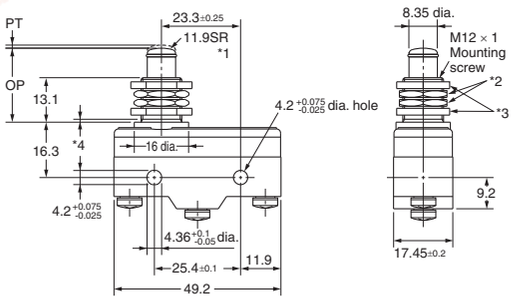

*1. Stainless-steel plunger
*2. Two hexagonal nuts (2 t × 14 width across flats)
*3. Two lock nuts (2 t × 15.6 width across flats)
*4. Incomplete screw part with a maximum length of 1.5 mm.

OF max.	5.30 N
RF min.	1.12 N
PT max.	1.8 mm
OT min.	5.5 mm
MD max.	0.06 mm
OP	21.8±0.8 mm

Note: Do not use the M12 mounting screw and the case mounting hole at the same time, or the case may be damaged.

Panel Mount Roller Plunger
Z-15GQ2255-B

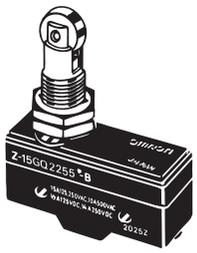

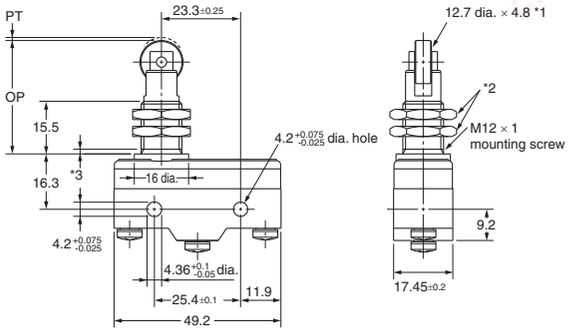

*1. Stainless-steel roller
*2. Two hexagonal nuts (3 t × 17 width across flats)
*3. Incomplete screw part with a maximum length of 1.5 mm.

OF max.	5.30 N
RF min.	1.12 N
PT max.	1.8 mm
OT min.	3.58 mm
MD max.	0.06 mm
OP	33.4±1.2 mm

Note: Do not use the M12 mounting screw and the case mounting hole at the same time, or the case may be damaged.

Panel Mount Cross Roller Plunger
Z-15GQ2155-B

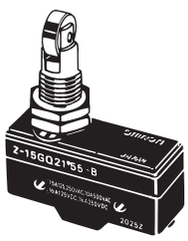

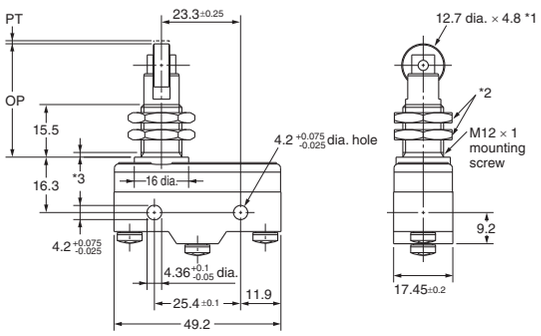

*1. Stainless-steel roller
*2. Two hexagonal nuts (3 t × 17 width across flats)
*3. Incomplete screw part with a maximum length of 1.5 mm.

OF max.	5.30 N
RF min.	1.12 N
PT max.	1.8 mm
OT min.	3.58 mm
MD max.	0.06 mm
OP	33.4±1.2 mm

Note: Do not use the M12 mounting screw and the case mounting hole at the same time, or the case may be damaged.

Leaf Spring
Z-15GL55-B

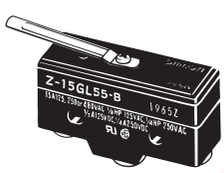

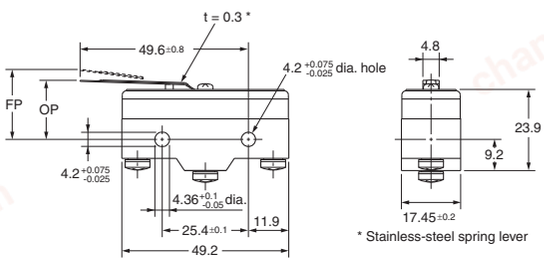

* Stainless-steel spring lever

OF max.	1.96 N
RF min.	0.14 N
OT *min.	1.6 mm
MD max.	1.3 mm
FP max.	20.6 mm
OP	17.5±0.8 mm

* When operating, be sure not to exceed 1.6 mm.

Note: Unless otherwise specified, a tolerance of ±0.4 mm applies to all dimensions.

chanhvinh.com

Roller Leaf Spring
Z-15GL255-B

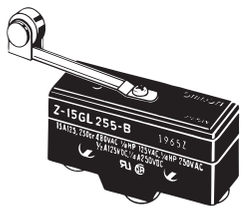

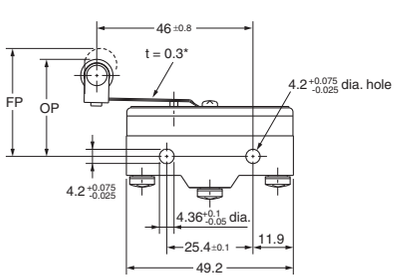

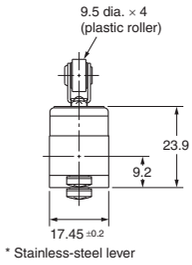

OF max.	1.96 N
RF min.	0.14 N
OT *min.	1.6 mm
MD max.	1.3 mm
FP max.	31.8 mm
OP	28.6±0.8 mm

* When operating, be sure not to exceed 1.6 mm.

Short Hinge Lever
Z-15GW2155-B

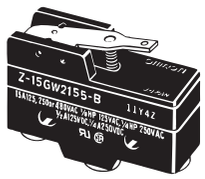

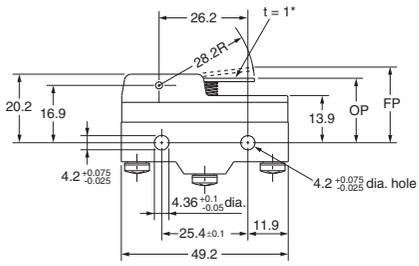

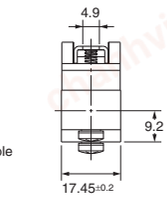

OF max.	1.86 N
RF min.	0.27 N
OT min.	2 mm
MD max.	1 mm
FP max.	25 mm
OP	19±0.8 mm

Long Hinge Lever
Z-15GW4455-B

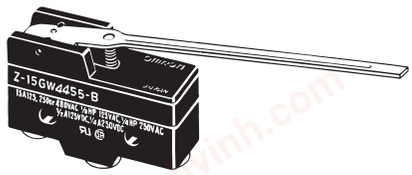

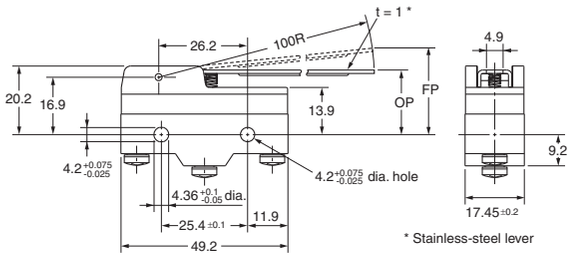

OF max.	0.88 N
RF min.	0.14 N
OT min.	5.6 mm
MD max.	3.5 mm
FP max.	33 mm
OP	19±1.2 mm

Hinge Lever
Z-15GW55-B

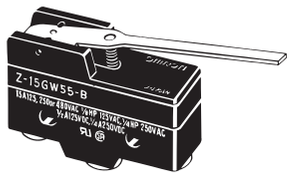

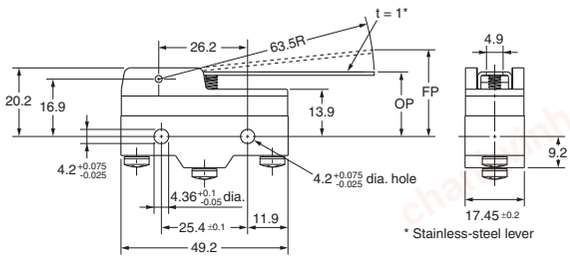

OF max.	0.98 N
RF min.	0.14 N
OT min.	5.6 mm
MD max.	2 mm
FP max.	28.2 mm
OP	19±0.8 mm

Short Hinge Roller Lever
Z-15GW2255-B
Z-01HW2255-B

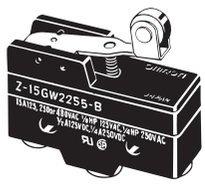

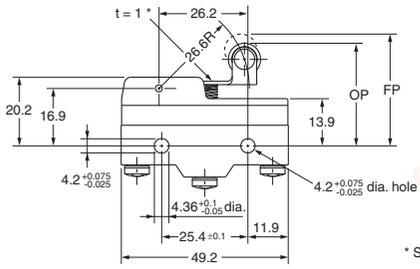

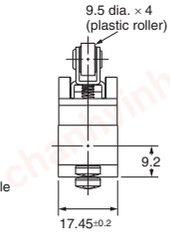

	Z-15GW2255-B	Z-01HW2255-B
OF max.	1.96 N	1.96 N
RF min.	0.41 N	0.27 N
OT min.	2.4 mm	2.4 mm
MD max.	0.8 mm	0.8 mm
FP max.	32.9 mm	
OP	30.2±0.4 mm	

Note: Unless otherwise specified, a tolerance of ±0.4 mm applies to all dimensions.

chanhvinh.com

Hinge Roller Lever
Z-15GW255-B

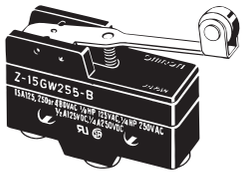

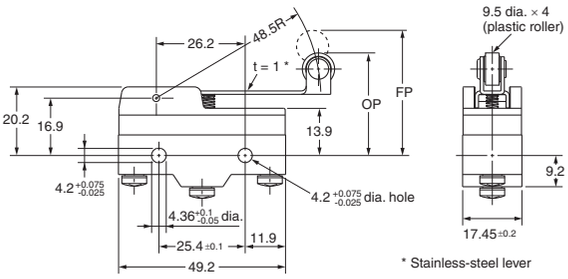

OF	**max.**	1.27 N
RF	**min.**	0.21 N
OT	**min.**	4 mm
MD	**max.**	1.6 mm
FP	**max.**	36.5 mm
OP		30.2±0.8 mm

Unidirectional Short Hinge Roller Lever
Z-15GW227755-B

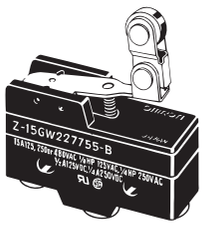

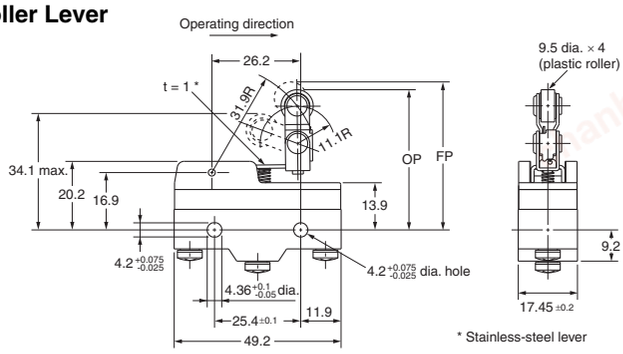

OF	**max.**	1.77 N
RF	**min.**	0.49 N
OT	**min.**	2.4 mm
MD	**max.**	0.8 mm
FP	**max.**	43.6 mm
OP		41.3±0.8 mm

Reverse Hinge Lever *
Z-15GM55-B

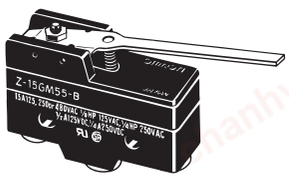

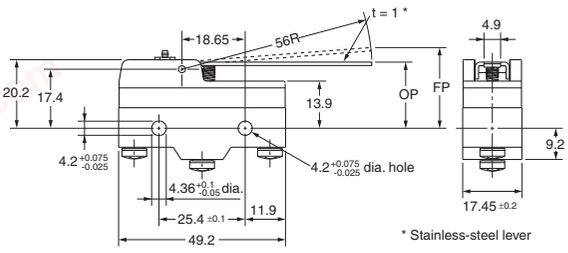

OF	**max.**	1.96 N
RF	**min.**	0.27 N
OT	**min.**	5.6 mm
MD	**max.**	0.89 mm
FP	**max.**	23.8 mm
OP		19±0.8 mm

Reverse Short Hinge Roller Lever *
Z-15GM2255-B

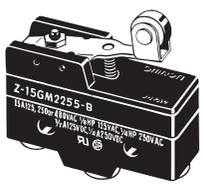

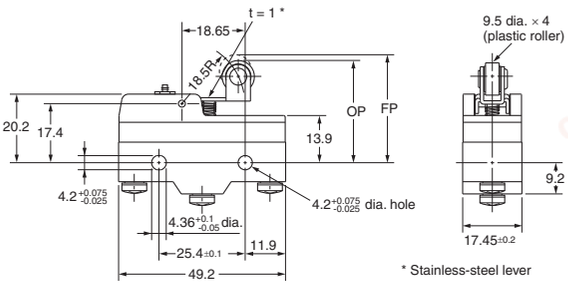

OF	**max.**	5.69 N
RF	**min.**	1.67 N
OT	**min.**	2 mm
MD	**max.**	0.28 mm
FP	**max.**	31.8mm
OP		29.4±0.4mm

Reverse Hinge Roller Lever *
Z-15GM255-B

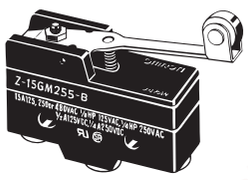

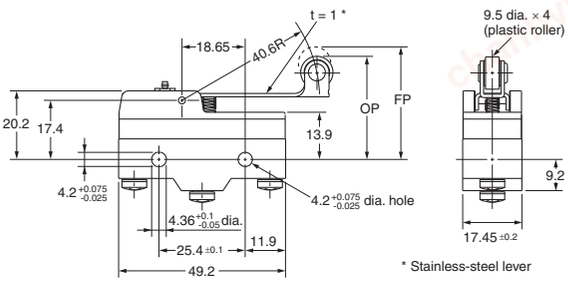

OF	**max.**	2.65 N
RF	**min.**	0.55 N
OT	**min.**	4 mm
MD	**max.**	0.64 mm
FP	**max.**	35 mm
OP		30.2±0.8 mm

* The pin plungers of reverse-type models are continuously pressed by the actuator levers with compression coil springs and the pin plungers are freed by operating the levers.

Note: Unless otherwise specified, a tolerance of ±0.4 mm applies to all dimensions.

chanhvinh.com

Flexible Rod (Coil Spring)
Z-15GNJ55-B

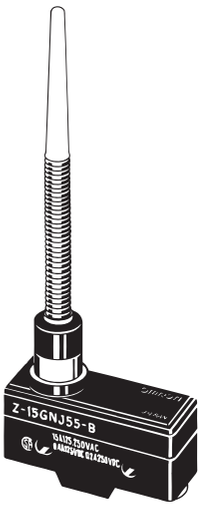

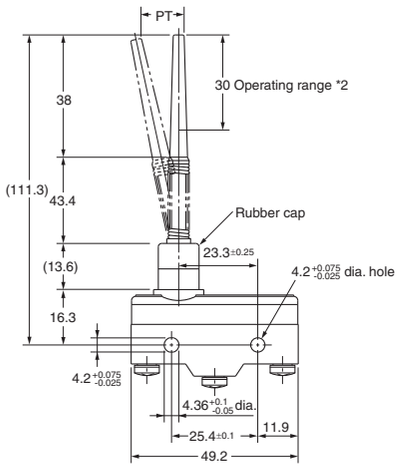

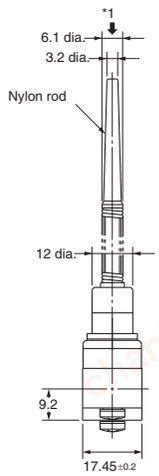

OF max.	0.49 N
PT max.	(20 mm)
TT max.	40 mm

*1. Operation is possible in any direction other than the axial direction (indicated by the arrow ⬇).
*2. Use only the area within the top 30 mm of the rod as the operating part. (Do not use the area that falls within 80 mm from the mounting hole as the operating part. Using this area may cause damage to the nylon rod.

Flexible Rod (Steel Wire)
Z-15HNJS55-B

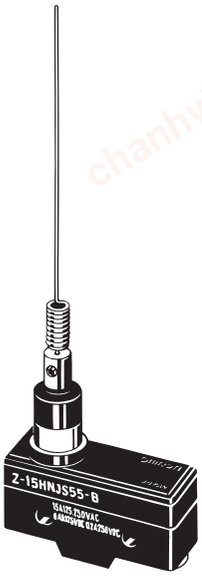

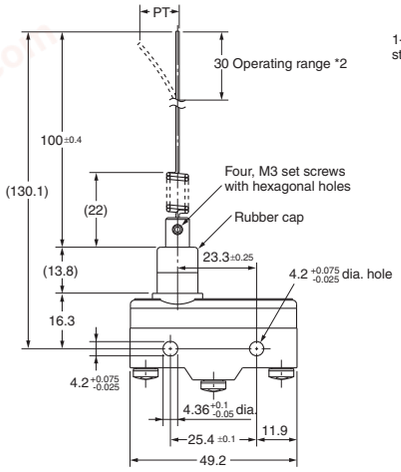

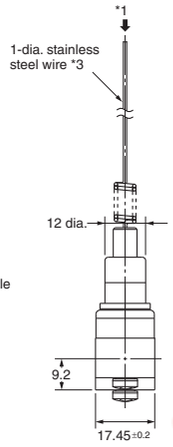

OF max.	0.15 N
PT max.	(25 mm)

*1. Operation is possible in any direction other than the axial direction (indicated by the arrow ⬇).
*2. Use only the area within the top 30 mm of the rod as the operating part. (Do not use the area that falls within 100 mm from the mounting hole as the operating part. Using this area may cause damage to the steel wire.)
*3. The steel wire can be replaced if damaged. (Model: Lever for HNJS55)

Note: Unless otherwise specified, a tolerance of ±0.4 mm applies to all dimensions.

chanhvinh.com

Basic Models (Drip-proof) with Terminal Protective Cover

Dimensions and Operating Characteristics

Pin Plunger
Z-15GA55-B5V

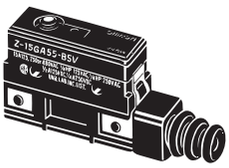

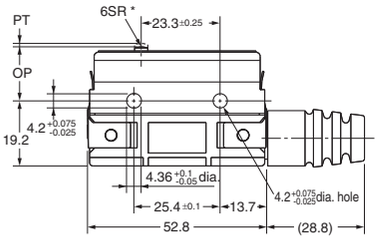

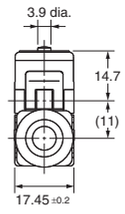

* Stainless-steel plunger

OF max.	2.45 to 4.22 N
RF min.	1.12 N
PT max.	2.2 mm
OT min.	0.13 mm
MD max.	0.06 mm
OP	15.9±0.4 mm

Z-15GK3A55-B5V

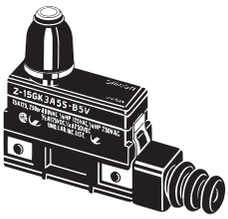

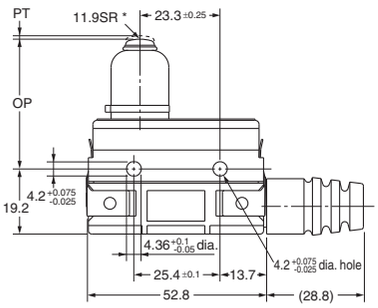

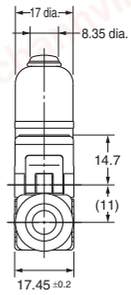

* Stainless-steel plunger

OF max.	5.30 N
RF min.	1.12 N
PT max.	2.4 mm
OT min.	3.5 mm
MD max.	0.06 mm
OP	37.8±1.2 mm

Panel Mount Plunger
Z-15GQA55-B5V

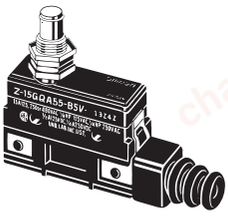

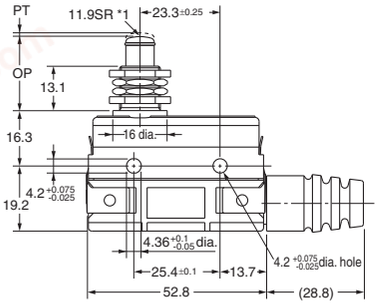

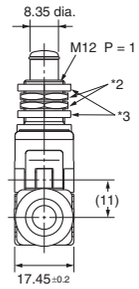

*1. Stainless-steel plunger
*2. Two hexagonal nuts (2 t × 14 width across flat)
*3. Two lock nuts (2 t × 15.6 width across flats)

OF max.	5.30 N
RF min.	1.12 N
PT max.	1.8 mm
OT min.	5.5 mm
MD max.	0.06 mm
OP	21.8±0.8 mm

Note: Do not use the M12 mounting screw and the case mounting hole at the same time, or the case may be damaged.

Panel Mount Roller Plunger
Z-15GQ22A55-B5V

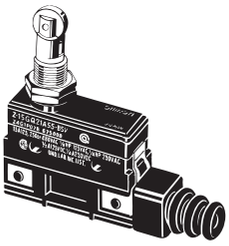

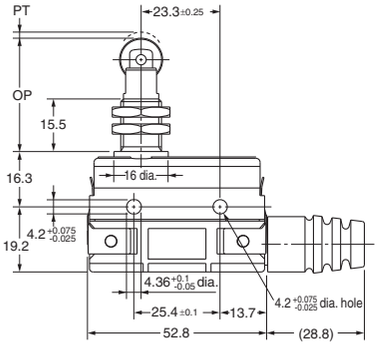

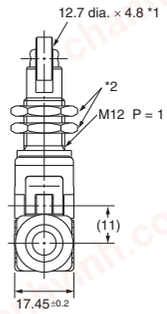

*1. Stainless-steel roller
*2. Two hexagonal nuts (3 t × 17 width across flats)

OF max.	5.30 N
RF min.	1.12 N
PT max.	1.8 mm
OT min.	3.58 mm
MD max.	0.06 mm
OP	33.4±1.2 mm

Note: Do not use the M12 mounting screw and the case mounting hole at the same time, or the case may be damaged.

Panel Mount Cross-roller Plunger
Z-15GQ21A55-B5V

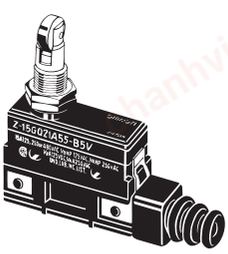

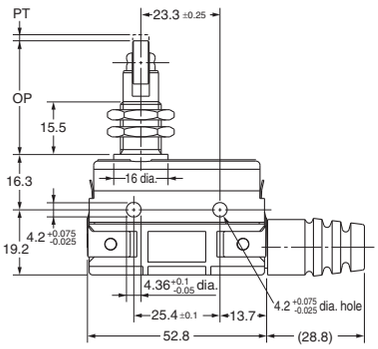

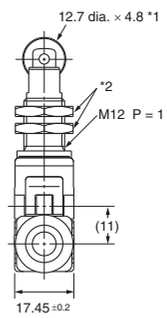

*1. Stainless-steel roller
*2. Two hexagonal nuts (3 t × 17 width across flats)

OF max.	5.30 N
RF min.	1.12 N
PT max.	1.8 mm
OT min.	3.58mm
MD max.	0.06 mm
OP	33.4±1.2 mm

Note: Do not use the M12 mounting screw and the case mounting hole at the same time, or the case may be damaged.

Note: Unless otherwise specified, a tolerance of ±0.4 mm applies to all dimensions.

chanhvinh.com

Long Hinge Lever
Z-15GW44A55-B5V

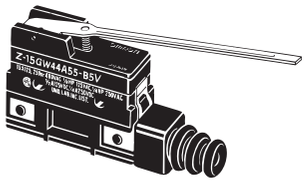

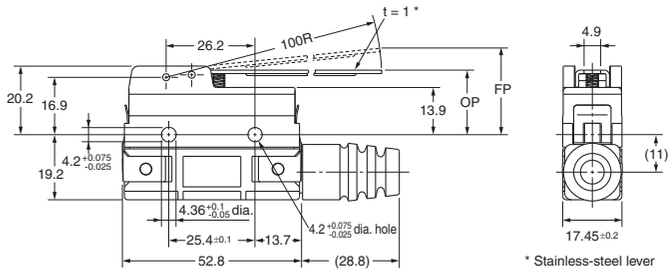

OF	**max.**	0.88 N
RF	**min.**	0.14 N
OT	**min.**	5.6 mm
MD	**max.**	3.5 mm
FP	**max.**	33 mm
OP		19±1.2 mm

Hinge Lever
Z-15GWA55-B5V

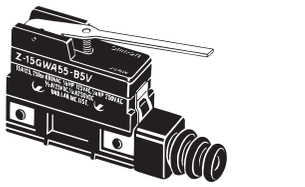

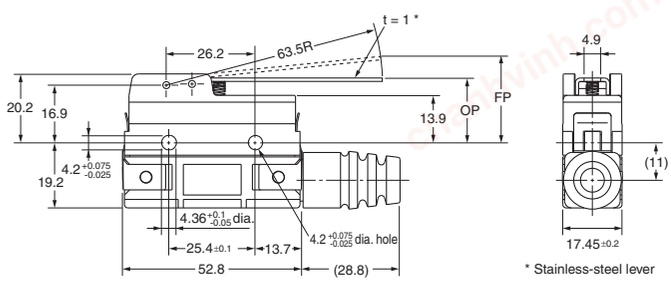

OF	**max.**	0.98 N
RF	**min.**	0.14 N
OT	**min.**	5.6 mm
MD	**max.**	2 mm
FP	**max.**	28.2 mm
OP		19±0.8 mm

Short Hinge Roller Lever
Z-15GW22A55-B5V

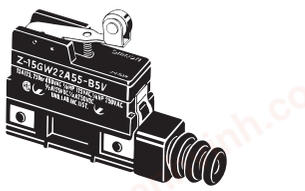

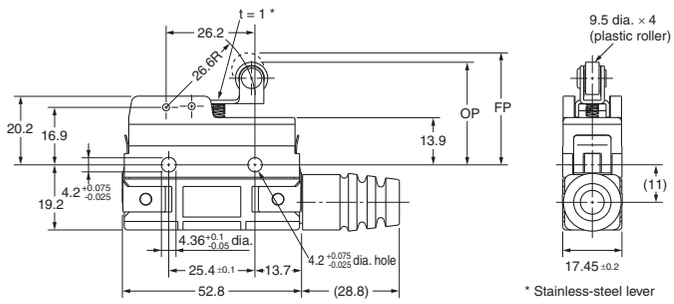

OF	**max.**	1.96 N
RF	**min.**	0.41 N
OT	**min.**	2.4 mm
MD	**max.**	0.8 mm
FP	**max.**	32.9 mm
OP		30.2±0.4 mm

Hinge Roller Lever
Z-15GW2A55-B5V

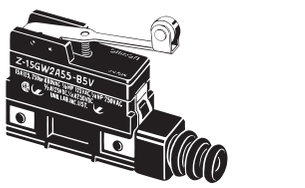

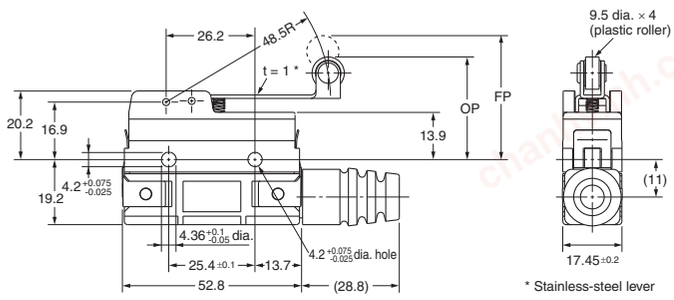

OF	**max.**	1.27 N
RF	**min.**	0.21 N
OT	**min.**	4 mm
MD	**max.**	1.6 mm
FP	**max.**	36.5 mm
OP		30.2±0.8 mm

Unidirectional Short Hinge Roller Lever
Z-15GW2277A55-B5V

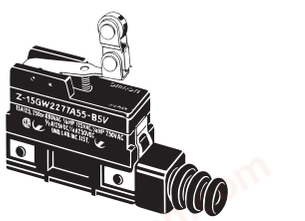

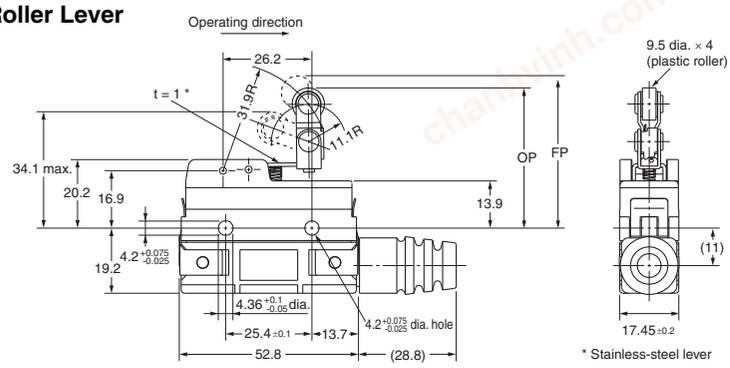

OF	**max.**	1.77 N
RF	**min.**	0.49 N
OT	**min.**	2.4 mm
MD	**max.**	0.8 mm
FP	**max.**	43.6 mm
OP		41.3±0.8 mm

Note: Unless otherwise specified, a tolerance of ±0.4 mm applies to all dimensions.

chanhvinh.com

Basic Models (Drop-proof) with Modeled terminals

Molded Terminals

L/R Type (The following illustration is the R type.)

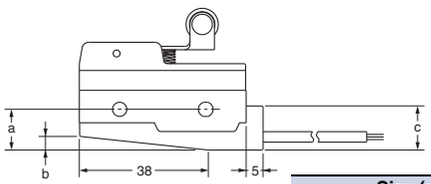

Size (mm) / Lead wire	a	b	c
VSF	12	4	13
VCT	19	11	20

D Type

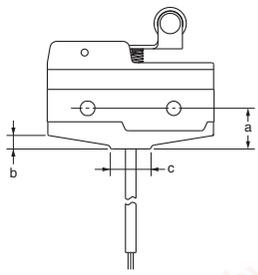

Size (mm) / Lead wire	a	b	c
VSF	12	4	12
VCT	19	11	16

Lead Wire Specifications

Specifications / Lead wire	Nominal cross sectional area (mm2)	Finished outer diameter (mm)	Connection to terminal	Length (m)
VSF (single-core, vinyl cord)	1.25	Approx. 3.1 dia.	Black: COM White: NO Red: NC	1, 3
VCT (vinyl-insulated cable)		Three-core: approx. 10.5 dia.		

Note: 1. No models with molded terminals are approved by UL, CSA, or EN.
2. Molded terminals are not available on all models. Contact your OMRON representative for applicable products.

Maintained-contact Models

Dimensions and Operating Characteristics

Pin Plunger
Z-15ER



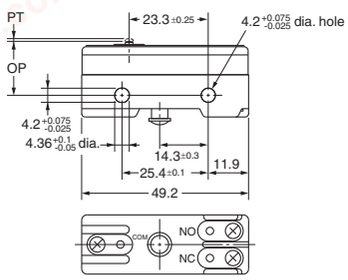

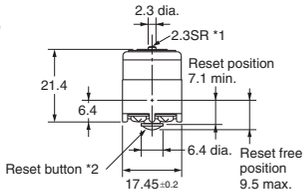

*1. Stainless steel plunger
*2. Plastic plunger

Plunger

OF max.	1.96 to 2.50 N
PT max.	0.4 mm
OT min.	0.13 mm
OP	15.9±0.4 mm

Reset Button

OF max.	0.55 to 2.79 N
OT min.	0.4 mm

Slim Spring Plunger
Z-15ESR



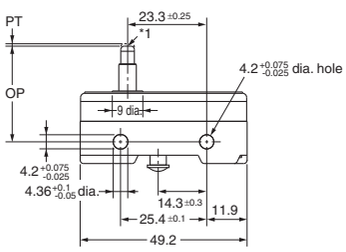

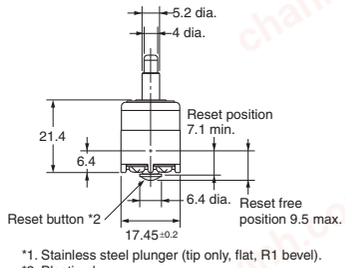

*1. Stainless steel plunger (tip only, flat, R1 bevel).
*2. Plastic plunger

Plunger

OF max.	2.65 N
PT max.	0.4 mm
OT min.	1.6 mm
OP	28.2±0.5 mm

Reset Button

OF max.	2.79 N
OT min.	0.4 mm

Hinge Lever
Z-15EWR

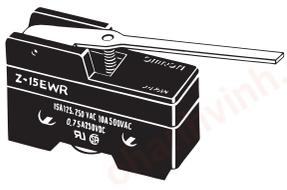

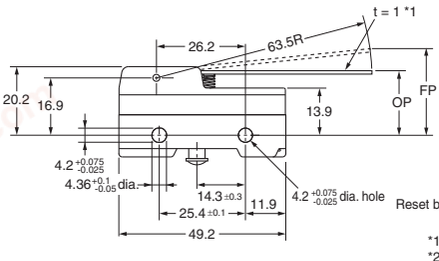

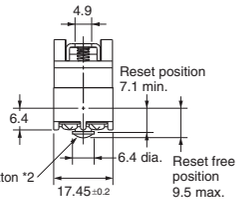

*1. Stainless steel lever
*2. Plastic plunger

Lever Tip

OF max.	0.54 N
OT min.	5.6 mm
FP max.	28.2 mm
OP	19±0.8 mm

Reset Button

OF max.	2.94 N
OT min.	0.4 mm

Note: Unless otherwise specified, a tolerance of ±0.4 mm applies to all dimensions.

chanhvinh.com

Accessories (Order Separately)

A Terminal Protective Cover, Actuators, and a Separator are available.

Drip-proof Terminal Cover (Order Separately)

The Drip-proof Terminal Protective Cover is provided for maintenance for Z-□A55-B5V Switches.

Ordering Information

Name	Model
Drip-proof Terminal Protective Cover	AP-DV

Dimensions

(Unit: mm)

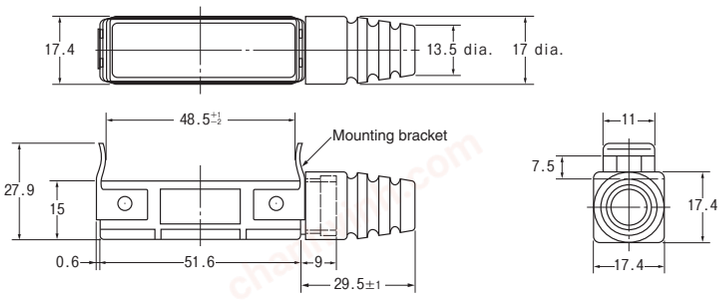

Terminal Covers (Sold Separately)

The Terminal Covers can be attached to Z, A, X, and DZ Switches.
The Terminal Cover is secured with mounting screws and protects the casing and terminal wires from dust, vibration, or fingers, thus preventing terminal short-circuiting, ground faults, wire disconnection or improper connection, and electric shock accidents.
Terminal Covers made of phenol resin have five or six thin wall sections. These sections can be torn open for providing holes for lead cables at desired points.
A terminal cover can't be used in the case of using an actuator sold separately.

Operation Information

Material	Application: Mounting direction	Soldering terminal use	Screw terminal use	Remarks
		Model		
Phenol resin	Side mounting	AP-A	AP-B	---
Metal press mold	Side mounting	AP1-A	AP1-B	Used for AP-A and AP-B
Vinyl chloride	Side mounting	AP-Z		---

Note: Use a Terminal Cover for screw terminals fir DZ-series Switches with soldering terminals.

Separator (Sold Separately)

Use a Separator when it is difficult to provide a sufficient insulation distance or when using the Switch near metal parts or copper wires.

Operation Information

Model
SEPARATOR FOR Z

chanhvinh.com

Dimensions (Unit: mm)

Terminal Covers

AP-A
Soldering Terminal Use
(Phenol Resin)

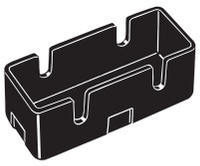

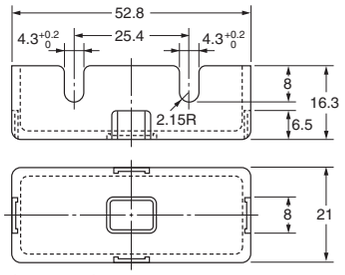

Note: The Cover has five thin, easy-to-separate portions for easy lead wire connections.

AP-B
Screw Terminal Use
(Phenol Resin)

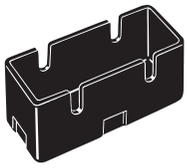

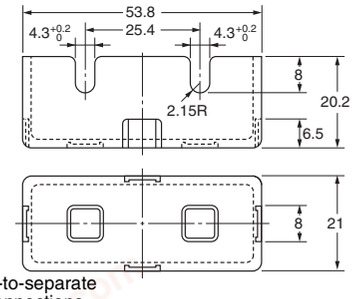

Note: The Cover has six thin, easy-to-separate portions for easy lead wire connections.

AP1-A
Soldering Terminal Use
(Metal Press Mold)

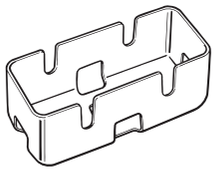

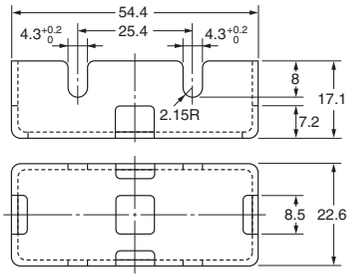

Note: The Cover has five holes for easy lead wire connections.

AP1-B
Screw Terminal Use
(Metal Press Mold)

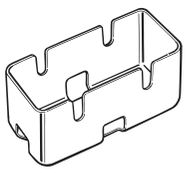

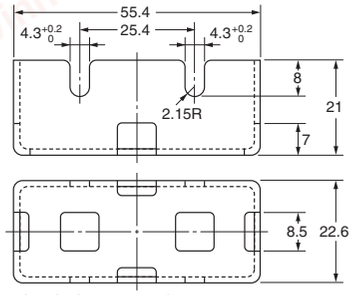

Note: The Cover has six holes for easy lead wire connections.

AP-Z
Soldering or Screw Terminal Use
(Vinyl Chloride)



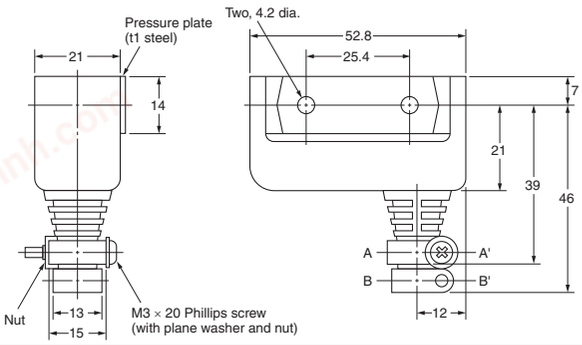

Cable Pull-out Dimension

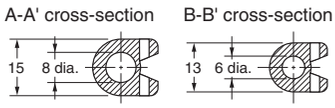

Note: A 6-dia. or 8-dia. cable can be used by cutting the cable pull-out hole to the size of the cable to be used.

Note: Each dimension has a tolerance of ±0.4 mm unless otherwise specified. (±0.8 mm for the AP-Z)

Separator

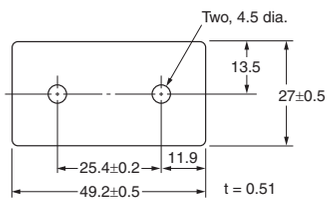

Note: 1. Each dimension has a tolerance of ±0.4 mm unless otherwise specified.
2. The material is EAVTC (Epoxide Alkyd Varnished Tetron Cloth) and its heat-resisting temperature is 130°C.

chanhvinh.com

Actuators (Sold Separately)

A Switch can be actuated by a cam or an appropriate object, in which case, use one of the following Actuators according to the application.

Ordering Information

Actuator	Application	Common to Z and X models
Hinge lever		XAA-1
Hinge roller lever		ZAA-2
Panel mount plunger	Short	ZAQ-3
	Medium	ZAQ-2
	Long	ZAQ-1
Panel mount roller plunger		ZAQ-22

Dimensions (Unit: mm) and Operating Characteristics

Note: These Actuators are not provided with Switches.

Hinge Lever
XAA-1

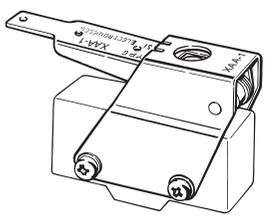

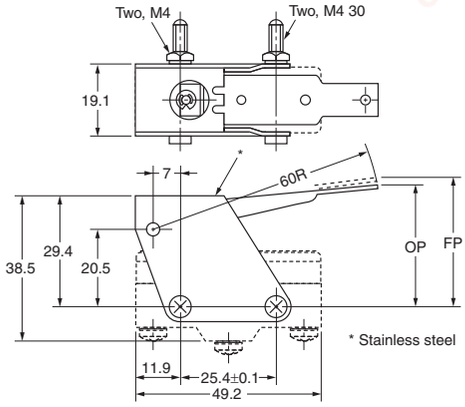

Operating characteristics / Model	Z-15G-B	X-10G-B
Operating force OF max.	4.90 N	4.90 N
Release force RF min.	1.67 N	1.67 N
Overtravel OT min.	12.7 mm	12.7 mm
Movement Differential MD max.	2.2 mm	3.3 mm
Free Position FP max.	32.9±1.6 mm	
Operating Position OP	28.9±1.6 mm	

Note: This Actuator can be used with the Z-15G(-B) and X-10G(-B). When mounting the Switch, set the overtravel to between 32% and 100%, taking into consideration the operating body and the distance between the Actuator and the dog.

Hinge Roller Lever
ZAA-2

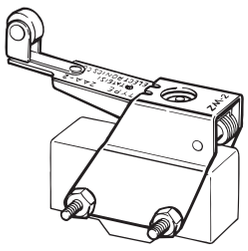

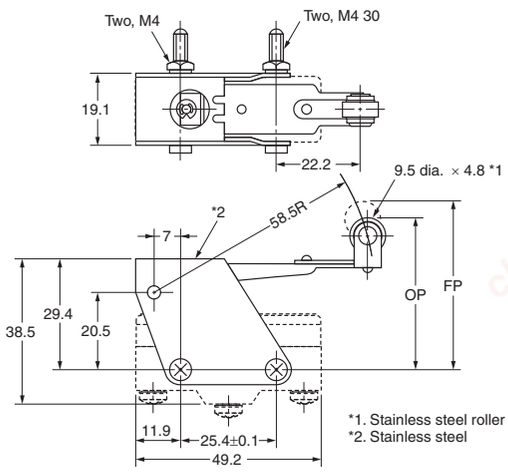

	Z-15G-B	X-10G-B
OF max.	4.90 N	4.90 N
RF min.	1.67 N	1.67 N
OT min.	12.7 mm	12.7 mm
MD max.	2.2 mm	3.3 mm
FP max.	44.5±1.6 mm	
OP	40.4±1.6 mm	

Note: This Actuator can be used with the Z-15G(-B) and ZX-10G(-B). When mounting the Switch, set the overtravel to between 32% and 100%, taking into consideration the operating body and the distance between the Actuator and the dog.

Short Panel Mount Plunger
ZAQ-3

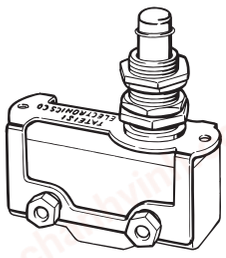

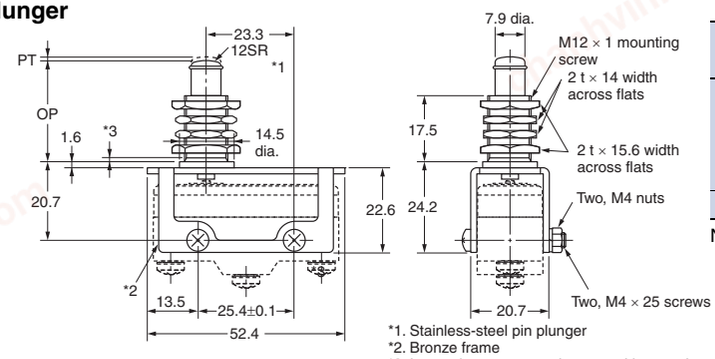

	ZAQ-3	
	Z-15E-B	X-10G-B
OF max.	8.34 N	5.39 N
RF min.	1.12 N	1.12 N
PT max.	0.8 mm	1 mm
OT min.	4.8 mm	4.5 mm
MD max.	0.15 mm	0.2 mm
OP	27.8±1.5 mm	

Note: 1. This Actuator (pin plunger) can be used with Standard Pin Plungers (Z-15G(-B), Z-15E(-B), X-10G(-B), DZ-10G-1A(-1B)) for the Z, X, and DZ models.

Note: Each dimension has a tolerance of ±0.4 mm unless otherwise specified.

chanhvinh.com

Medium Panel Mount Plunger
ZAQ-2

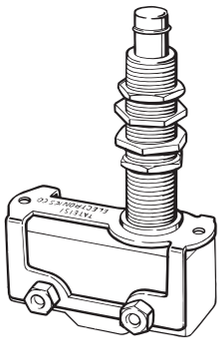

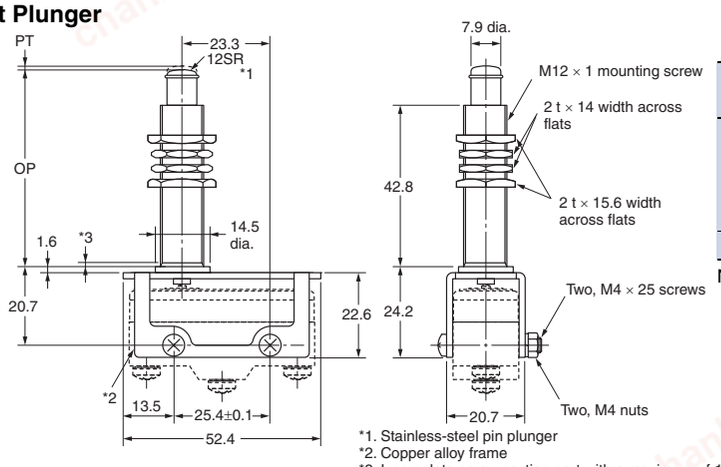

*1. Stainless-steel pin plunger
*2. Copper alloy frame
*3. Incomplete screw section part with a maximum of 1.5 mm

	ZAQ-2	
	Z-15E-B	X-10G-B
OF max.	8.34 N	5.39 N
RF min.	1.12 N	1.12 N
PT max.	0.8 mm	1 mm
OT min.	4.8 mm	4.5 mm
MD max.	0.15 mm	0.2 mm
OP	53.2±1.5 mm	

Note: This Actuator (pin plunger) can be used with Standard Pin Plungers (Z-15G(-B), Z-15E(-B), X-10G(-B), DZ-10G-1A(-1B)) for the Z, X, and DZ models.

Long Panel Mount Plunger
ZAQ-1

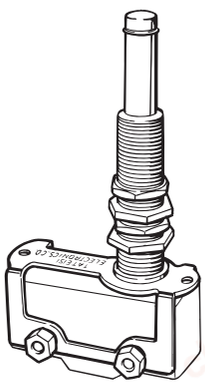

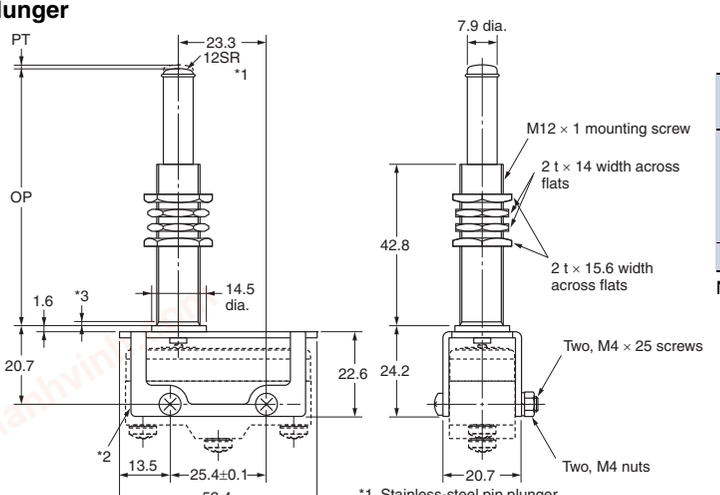

*1. Stainless-steel pin plunger
*2. Copper alloy frame
*3. Incomplete screw section part with a maximum of 1.5 mm

	ZAQ-1	
	Z-15E-B	X-10G-B
OF max.	8.34 N	5.39 N
RF min.	1.12 N	1.12 N
PT max.	0.8 mm	1 mm
OT min.	20.6 mm	20.4 mm
MD max.	0.15 mm	0.2 mm
OP	69.1±1.5 mm	

Note: This Actuator (pin plunger) can be used with Standard Pin Plungers (Z-15G(-B), Z-15E(-B), X-10G(-B), DZ-10G-1A(-1B)) for the Z, X, and DZ models.

Panel Mount Roller Plunger
ZAQ-22

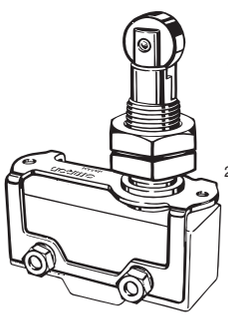

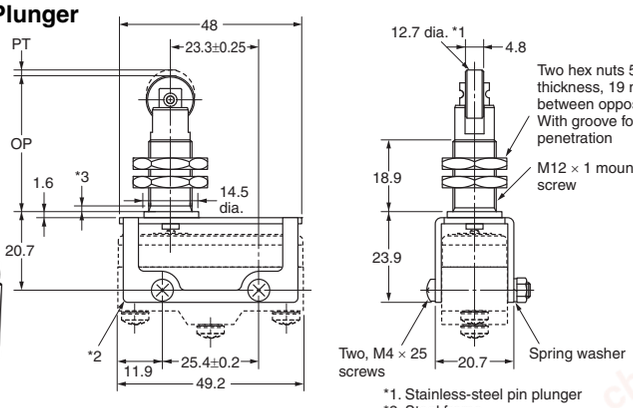

*1. Stainless-steel pin plunger
*2. Steel frame
*3. Incomplete screw section part with a maximum of 1.5 mm

	ZAQ-22	
	Z-15E-B	DZ-10G-1B
OF max.	8.34 N	11.1 N
RF min.	1.12 N	1.12 N
PT max.	2 mm	2 mm
OT min.	3.58 mm	1 mm
MD max.	0.15 mm	0.46 mm
OP	37±0.8 mm	35.4±1.2 mm

Note: This Actuator (roller plunger) can be used with standard pin plungers (Z-15G(-B), Z-15E(-B), and DZ-10G-1A(-1B)). It cannot be used with X models.

Note: Each dimension has a tolerance of ±0.4 mm unless otherwise specified.

chanhvinh.com

Safety Precautions

Refer to *Safety Precautions for All Basic Switches*.

Precautions for Safe Use

Terminal Connection

When soldering lead wires to the Switch, make sure that the capacity of the soldering iron is 60 W maximum. Do not take more than 5 s to solder any part of the Switch. The characteristics of the Switch will deteriorate if a soldering iron with a capacity of more than 60 W is applied to any part of the Switch for 5 s or more.

Operation

- Make sure that the switching frequency or speed is within the specified range.
  1. If the switching speed is extremely slow, the contact may not be switched smoothly, which may result in a contact failure or contact welding.
  2. If the switching speed is extremely fast, switching shock may damage the Switch soon. If the switching frequency is too high, the contact may not catch up with the speed.

  The rated permissible switching speed and frequency indicate the switching reliability of the Switch.
  The life of a Switch is determined at the specified switching speed. The life varies with the switching speed and frequency even when they are within the permissible ranges. In order to determine the life of a Switch model to be applied to a particular use, it is best to conduct an appropriate durability test on some samples of the model under actual conditions.
- Make sure that the actuator travel does not exceed the permissible OT position. The operating stroke must be set to 70% to 100% of the rated OT.

Precautions for Correct Use

Mounting Location

- Do not use the switch alone in atmospheres such as flammable or explosive gases. Arcing and heat generation associated with switching may cause fires or explosions.
- Switches are generally not constructed with resistance against water. Use a protective cover to prevent direct spraying if the switch is used in locations subject to splashing or spurting oil or water, dust adhering.

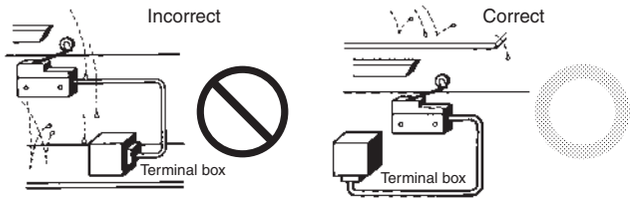

- Install the switch in a location that is not directly subject to debris and dust from cutting. The actuator and the switch body must be protected from accumulated cutting debris and dirt.

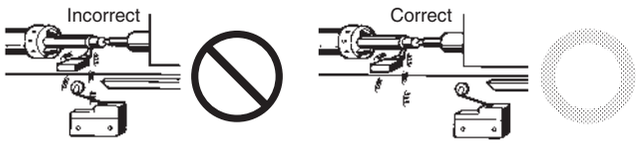

- Do not use the switch in locations subject to hot water (greater than 60°C) or in water vapor.
- Do not use the switch outside the specified temperature and atmospheric conditions.
  The permissible ambient temperature depends on the model. (Refer to the specifications in this catalog.) Sudden thermal changes may cause thermal shock to distort the switch and result in faults.

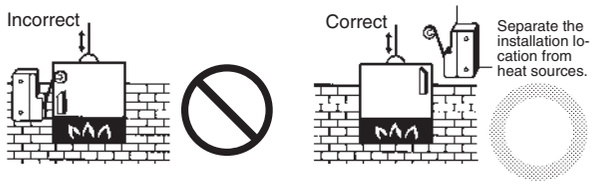

- Mount a cover if the switch is to be installed in a location where worker inattention could result in incorrect operation or accidents.



- Subjecting the switch to continuous vibration or shock may result in contact failure or faulty operation due to abrasion powder and in reduced durability. Excessive vibration or shock will cause the contacts to operate malfunction or become damaged. Mount the switch in a location that is not subject to vibration or shock and in a direction that does not subject the switch to resonance.
- If silver contacts are used with relatively low frequency for a long time or are used with microloads, the sulfide coating produced on the contact surface will not be broken down and contact faults will result. Use a microload switch that uses gold contacts.
- Do not use the switch in atmospheres with high humidity or heat or in harmful gases, such as sulfide gas (H_2S, SO_2), ammonia gas (NH_3), nitric acid gas (HNO_3), or chlorine gas (Cl_2). Doing so may impair functionality, such as with damage due to contacting faults or corrosion.
- The switch includes contacts. If the switch is used in an atmosphere with silicon gas, arc energy may cause silicon oxide (SiO_2) to accumulate on the contacts and result in contact failure. If there is silicon oil, silicon filling, silicon wiring, or other silicon products in the vicinity of the switch, use a contact protection circuit to limit arcing and remove the source of the silicon gas.

Mounting

Always make sure that the power is turned OFF before mounting, removing, or wiring the Switch, or performing maintenance. Electric shock or burning may occur.

Selecting Models

We recommend using Drip-proof Models (protection equivalent to IP62) in locations subject to floating dirt and dust. Other models do not have a protective structure.

Wiring

- Use wire sizes that are suitable to the applied voltage and carried current.
- If you use a soldering iron to solder the wires, do not allow the tip of the soldering iron to exceed 380°C. If a Switch is used with insufficient soldering, abnormal heat and burning may occur.
- Solder for no more than 5 s at 350°C and for no more than 3 s at 380°C. If heat is applied for too long, the case may melt, the lead wire coverings may be scorched, and other characteristics of the Switch may deteriorate.

Tightening

The suitable tightening torque for screw terminals is given below.
Screw terminals except for those on Split-contact Models (Z-10FY-B): 0.78 to 1.18 N·m
Screw terminals on Split-contact Models (Z-10FY-B): 0.49 to 1.18 N·m

Operation

- Make sure that the switching speed and frequency are is within the specified ranges.

1. If the switching speed is extremely slow, the contacts may not be switched smoothly, which may result in a contact failure or contact welding.

chanhvinh.com

2. If the switching speed is extremely fast, switching shock may damage the Switch prematurely. If the switching frequency is too high, the contacts may not be able to keep up with the speed. The rated permissible switching speed and frequency indicate the switching reliability of the Switch.
   The life of a Switch is determined at the specified switching speed. The life varies with the switching speed and frequency even when they are within the permissible ranges. Always conduct appropriate durability tests under actual conditions before using a Switch.

- Make sure that the actuator travel does not exceed the permissible OT position. The operating stroke must be set to 70% to 100% of the rated OT.

Panel Mount Switch (Z-15□Q□, Z-01□Q□)

- When mounting the panel mount plunger model with screws on a side surface, be careful of the dog angle and operation speed. Excessive dog angle or operation speed may damage the Switch.
- When using the panel mount plunger model mounted with screws on a side surface, be careful not to apply a large shock. Applying a shock exceeding 1,000 m/s^2 may damage the Switch.
- When using the panel mount plunger model mounted with screws on a side surface, remove the hexagonal nuts from the actuator.

High-sensitivity Switch (Z-15H)/ Extra-high-sensitivity Switch (Z-15H2)

- When using the Switch in a DC circuit, be sure to provide an arc suppressor as well because the small contact gap of the Switch may result in contact troubles.
- In an application where a high repeat accuracy is required, limit the current that flows through the Switch to within 0.1 A. Also, use a relay to control a high-capacity load if the Switch is connected to such a load. (In this case, the exciting current of the relay coil is the load of the Switch.)
- Do not apply a force of 19.6 N or higher to the pin plunger.
- Exercise care that the environment conditions such as temperature and humidity do not change abruptly.

Micro Load Applicable Range

Using a model for ordinary loads to open or close the contact of a micro load circuit may result in faulty contact. Use models that operate in the following range. However, even when using micro load models within the operating range shown here, if inrush current occurs when the contact is opened or closed, it may increase contact wear and so decrease durability. Therefore, insert a contact protection circuit where necessary.
The minimum applicable load is the N-level reference value. This value indicates the malfunction reference level for the reliability level of 60% (λ 60). The equation, λ 60 = 0.5×10^{-6}/operations indicates that the estimated malfunction rate is less than 1/2,000,000 operations with a reliability level of 60%.

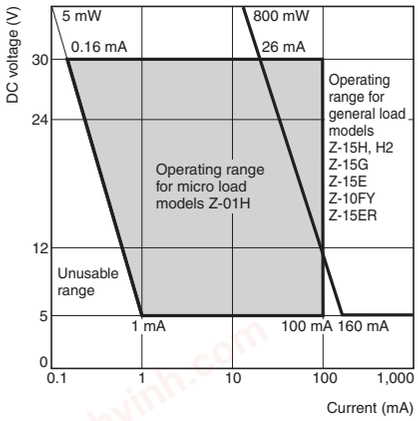

	Z-01H	Z-15□, Z-10FY
Minimum applicable load	1 mA at 5 VDC	160 mA at 5 VDC

Models with Drip-proof Terminal Cover (Z-□A55-B5V)

Wiring

- To attach the Protective Cover to the case, hold the cover in almost parallel to the case and then push it to the case. If the cover is pushed diagonally, the rubber packing may slip off, degrading the sealability of the Switch.

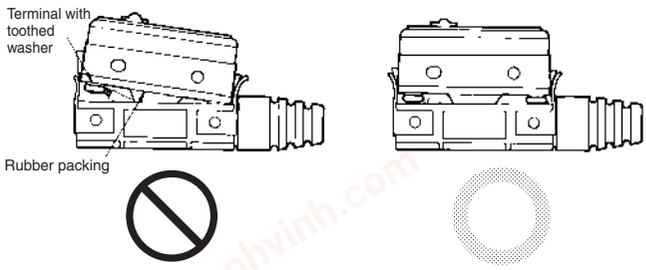

- Use round solderless terminals having the following dimensions to connect leads to the terminals. Tighten the screws of terminals to a torque of 0.78 to 1.18 N·m. Use the terminal shown below.

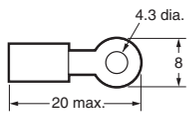

- A cable 8.5 to 10.5 mm in diameter can be applicable to the sealing rubber of the lead outlet of the Switch. A two-core or three-core VCT cable having a cross-sectional area of 1.25 mm^2 is especially suitable for this.
- Use M4 small screws with spring toothed washer are used as the terminal screws.

Drip-proof Switch (Z-□55)

- The Switch is not perfectly oil-tight; so do not dip it in oil or water.
- The rubber boots are made from weather-resistive chloroprene rubber.
- Do not use Basic Switches in places with radical changes in temperature.
- Rubber boots and rubber caps will tend to harden at lower ambient temperatures. If an Actuator is used in a pressed state for an extended period of time at low temperatures, it may return slowly or it may not return at all. OMRON can provide special Actuators for use at low temperature with rubber boots or rubber caps made of silicon rubber, which has superior resistance to cold. Ask your OMRON representative for details.

Split-contact Switch (Z-10F□Y)

The applicable current varies depending on how the contacts are used. If the Switch is connected in series, the Switch can endure a current 1.5 to 2 times higher than the current that can be applied in parallel connection.

Flexible Rod Switch (Z-15□NJ□55, Drip-proof)

- When the rod is fully swung, the Switch may operate when the lever returns, causing chattering. Use a circuit that compensates for chattering wherever possible.
- Do not switch the rod to the fullest extent when the Switch is to break a power circuit because such a practice may cause metal deposition to occur between the mating contacts of the Switch.

Other Precautions

- Do not apply excessive force with a screwdriver or other tool when attaching or removing the Protective Cover. Doing so may deform the Switch.

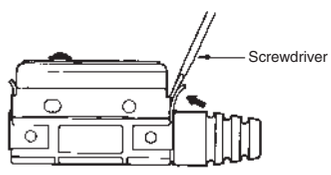

- The Drip-proof Terminal Protective Cover can be sued only with Switches with model numbers ending in “-B5V.”
- Only the Terminal Protective Cover is available for maintenance.

chanhvinh.com

Terms and Conditions Agreement

Read and understand this catalog.
Please read and understand this catalog before purchasing the products. Please consult your OMRON representative if you have any questions or comments.

Warranties.
(a) Exclusive Warranty. Omron's exclusive warranty is that the Products will be free from defects in materials and workmanship for a period of twelve months from the date of sale by Omron (or such other period expressed in writing by Omron). Omron disclaims all other warranties, express or implied.
(b) Limitations. OMRON MAKES NO WARRANTY OR REPRESENTATION, EXPRESS OR IMPLIED, ABOUT NON-INFRINGEMENT, MERCHANTABILITY OR FITNESS FOR A PARTICULAR PURPOSE OF THE PRODUCTS. BUYER ACKNOWLEDGES THAT IT ALONE HAS DETERMINED THAT THE
PRODUCTS WILL SUITABLY MEET THE REQUIREMENTS OF THEIR INTENDED USE.
Omron further disclaims all warranties and responsibility of any type for claims or expenses based on infringement by the Products or otherwise of any intellectual property right. (c) Buyer Remedy. Omron's sole obligation hereunder shall be, at Omron's election, to (i) replace (in the form originally shipped with Buyer responsible for labor charges for removal or replacement thereof) the non-complying Product, (ii) repair the non-complying Product, or (iii) repay or credit Buyer an amount equal to the purchase price of the non-complying Product; provided that in no event shall Omron be responsible for warranty, repair, indemnity or any other claims or expenses regarding the Products unless Omron's analysis confirms that the Products were properly handled, stored, installed and maintained and not subject to contamination, abuse, misuse or inappropriate modification. Return of any Products by Buyer must be approved in writing by Omron before shipment. Omron Companies shall not be liable for the suitability or unsuitability or the results from the use of Products in combination with any electrical or electronic components, circuits, system assemblies or any other materials or substances or environments. Any advice, recommendations or information given orally or in writing, are not to be construed as an amendment or addition to the above warranty.
See http://www.omron.com/global/ or contact your Omron representative for published information.

Limitation on Liability; Etc.
OMRON COMPANIES SHALL NOT BE LIABLE FOR SPECIAL, INDIRECT, INCIDENTAL, OR CONSEQUENTIAL DAMAGES, LOSS OF PROFITS OR PRODUCTION OR COMMERCIAL LOSS IN ANY WAY CONNECTED WITH THE PRODUCTS, WHETHER SUCH CLAIM IS BASED IN CONTRACT, WARRANTY, NEGLIGENCE OR STRICT LIABILITY.
Further, in no event shall liability of Omron Companies exceed the individual price of the Product on which liability is asserted.

Suitability of Use.
Omron Companies shall not be responsible for conformity with any standards, codes or regulations which apply to the combination of the Product in the Buyer's application or use of the Product. At Buyer's request, Omron will provide applicable third party certification documents identifying ratings and limitations of use which apply to the Product. This information by itself is not sufficient for a complete determination of the suitability of the Product in combination with the end product, machine, system, or other application or use. Buyer shall be solely responsible for determining appropriateness of the particular Product with respect to Buyer's application, product or system. Buyer shall take application responsibility in all cases.
NEVER USE THE PRODUCT FOR AN APPLICATION INVOLVING SERIOUS RISK TO LIFE OR PROPERTY OR IN LARGE QUANTITIES WITHOUT ENSURING THAT THE SYSTEM AS A WHOLE HAS BEEN DESIGNED TO ADDRESS THE RISKS, AND THAT THE OMRON PRODUCT(S) IS PROPERLY RATED AND INSTALLED FOR THE INTENDED USE WITHIN THE OVERALL EQUIPMENT OR SYSTEM.

Programmable Products.
Omron Companies shall not be responsible for the user's programming of a programmable Product, or any consequence thereof.

Performance Data.
Data presented in Omron Company websites, catalogs and other materials is provided as a guide for the user in determining suitability and does not constitute a warranty. It may represent the result of Omron's test conditions, and the user must correlate it to actual application requirements. Actual performance is subject to the Omron's Warranty and Limitations of Liability.

Change in Specifications.
Product specifications and accessories may be changed at any time based on improvements and other reasons. It is our practice to change part numbers when published ratings or features are changed, or when significant construction changes are made. However, some specifications of the Product may be changed without any notice. When in doubt, special part numbers may be assigned to fix or establish key specifications for your application. Please consult with your Omron's representative at any time to confirm actual specifications of purchased Product.

Errors and Omissions.
Information presented by Omron Companies has been checked and is believed to be accurate; however, no responsibility is assumed for clerical, typographical or proofreading errors or omissions.

2022.1

In the interest of product improvement, specifications are subject to change without notice.

OMRON Corporation
Industrial Automation Company

http://www.ia.omron.com/

(c)Copyright OMRON Corporation 2022 All Right Reserved.