chanhvinh.com

D2AW-R

Sealed Ultra Subminiature Basic Switch with Integrated Resistors

Detection of four states by internal resistor

- **<Output of four states> Four states (switch ON/OFF, short circuit, open circuit) are output.**
- **<Extra-long stroke even without levers. (OT reference value: 1.4 mm)**
- **<Quiet operation> A sliding contact construction achieves high contact reliability and quiet operating sound.**

RoHS Compliant

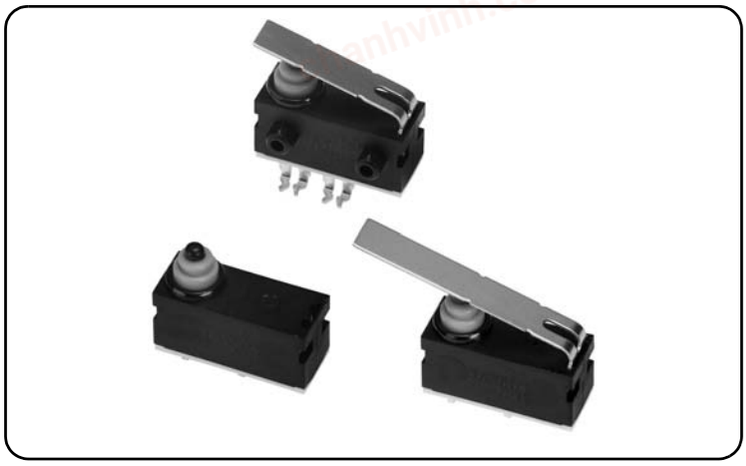

Model Number Legend

Some model number elements cannot be used in conjunction.

If you have any desired model with a specification not in this model number legend, contact your OMRON sales representative. We will consider if a requested model can be manufactured by modifying existing models.

D2AW-□□0□3□-□
(1 2 3 4 5)

1. Circuit structure
- R1: Series circuit
- R5: Parallel circuit

2. Mounting Structure
- A: Without posts
- ER: Short post on right
- EL: Short post on left

3. Actuator
- 0: Pin plunger
- 5: Long straight leaf lever
- 6: Leaf lever

4. Terminals
- D: Straight PCB terminals
- FR: Press-fit terminals (Right angled)
- FL: Press-fit terminals (Left angled)

5. Option Code
- Customized Code

chanhvinh.com

List of Models

Actuator	Terminals	Model / Circuit structure	Without posts 	Short post on right 	Short post on left 
Pin plunger 	PCB terminals	Series circuit	D2AW-R1-A003D	D2AW-R1-ER003D	D2AW-R1-EL003D
		Parallel circuit	D2AW-R5-A003D	D2AW-R5-ER003D	D2AW-R5-EL003D
	Press-fit terminals (Right angled)	Series circuit	D2AW-R1-A003FR	D2AW-R1-ER003FR	---
		Parallel circuit	D2AW-R5-A003FR	D2AW-R5-ER003FR	---
	Press-fit terminals (Left angled)	Series circuit	D2AW-R1-A003FL	---	D2AW-R1-EL003FL
		Parallel circuit	D2AW-R5-A003FL	---	D2AW-R5-EL003FL
Long straight leaf lever 	PCB terminals	Series circuit	D2AW-R1-A053D	D2AW-R1-ER053D	D2AW-R1-EL053D
		Parallel circuit	D2AW-R5-A053D	D2AW-R5-ER053D	D2AW-R5-EL053D
	Press-fit terminals (Right angled)	Series circuit	D2AW-R1-A053FR	D2AW-R1-ER053FR	---
		Parallel circuit	D2AW-R5-A053FR	D2AW-R5-ER053FR	---
	Press-fit terminals (Left angled)	Series circuit	D2AW-R1-A053FL	---	D2AW-R1-EL053FL
		Parallel circuit	D2AW-R5-A053FL	---	D2AW-R5-EL053FL
Leaf lever 	PCB terminals	Series circuit	D2AW-R1-A063D	D2AW-R1-ER063D	D2AW-R1-EL063D
		Parallel circuit	D2AW-R5-A063D	D2AW-R5-ER063D	D2AW-R5-EL063D
	Press-fit terminals (Right angled)	Series circuit	D2AW-R1-A063FR	D2AW-R1-ER063FR	---
		Parallel circuit	D2AW-R5-A063FR	D2AW-R5-ER063FR	---
	Press-fit terminals (Left angled)	Series circuit	D2AW-R1-A063FL	---	D2AW-R1-EL063FL
		Parallel circuit	D2AW-R5-A063FL	---	D2AW-R5-EL063FL

If you have any desired model with a specification not in the above list, contact your OMRON sales representative. We will consider if a requested model can be manufactured by modifying existing models.

chanhvinh.com

D2AW-R Sealed Ultra Subminiature Basic Switch with Integrated Resistor

Contact Specifications

Contact	**Specification**	Slide
	Material	Silver Plated

Electrical characteristic

		R1	R5
Rating voltage		5 to 14 VDC	
Resistance value *1	**Resistor1**	5110 Ω	3920 Ω
	Resistor2	1620 Ω	511 Ω
Output resistance *2	**FP-OP**	6730 Ω ± 5%	3920 Ω ± 5%
	OP-TTP	1620 Ω ± 5%	452 Ω ± 5%
Resistor power ratings		0.25 W	0.5 W
Circuit diagram *2		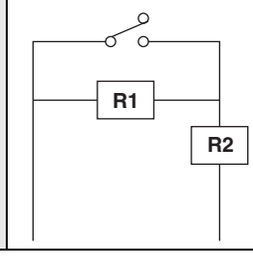	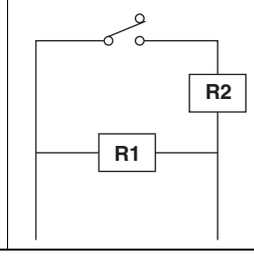

∗1. The resistance value and power rating of resistors 1 and 2 can be changed.
Contact your OMRON sales representative for details.
∗2. Avoid use outside of the operating temperature range of -40°C to +85°C. Temperature might cause output resistance to fluctuate which induces malfunction.

Characteristics

Permissible operating speed		30 to 500 mm/s (pin plunger models)
Permissible operating frequency	**Mechanical**	30 operations/min max.
	Electrical	20 operations/min max
Vibration resistance *1	**Malfunction**	Frequency: 10 to 55 Hz Amplitude: 1.5 mm Direction Time: X,Y and Z 10 minutes per axis
Shock resistance *1	**Destruction**	Shock: MAX 1000m/s² Direction Time: X,Y and Z 10 times per axis
	Malfunction	Shock: MAX 300m/s² Direction Time: X,Y and Z 3 times per axis
Durability *2	**Mechanical**	200,000 operations min. (30 operations/min)
	Electrical	200,000 operations min. (20 operations/min)
Degree of protection		IEC IP67
Heart resistant		85°C 500 hours
Cold resistant		-40°C 500 hours
Humidity resistance		70°C 95%RH 500 hours
Temperature cycle resistance		-40°C (12 hours <--> 55°C (12 hours) 5 cycles
Weight		Approx. 0.7 g (for pin plunger models with terminals)

Note: The data given above are initial values.
∗1. For the pin plunger models, the above values apply for use at the free position, operating position, and total travel position. For the lever models, they apply at the total travel position. Close or open circuit of the contact is 1ms max.
∗2. For testing conditions, consult your OMRON sales representative.

Mounting Structure and Reference Positions for Operating Characteristics (Unit: mm)

● **Without posts**
D2AW-R□-A

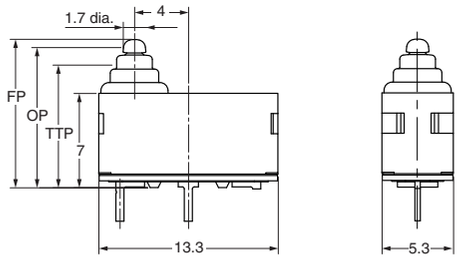

● **Short post**
D2AW-R□-E□

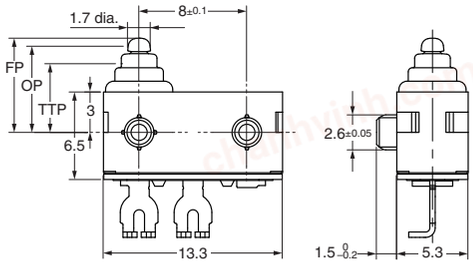

Mounting Hole Dimensions (Reference)

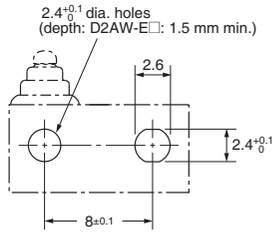

chanhvinh.com

Terminals (Unit: mm)

● PCB terminals

<PCB Mounting Dimensions (Reference)>

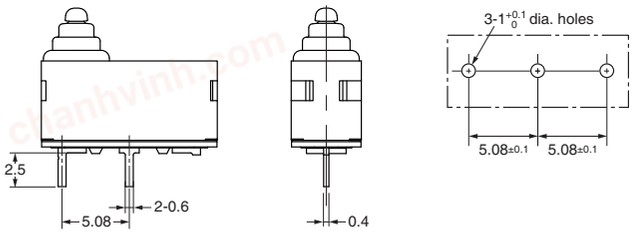

● Press-fit terminals

(Left angled)

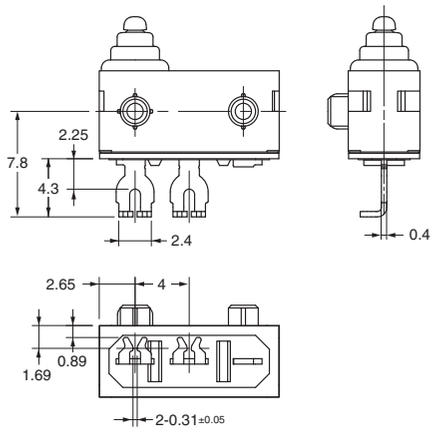

Insertion side unit mounting dimensions (for reference only)

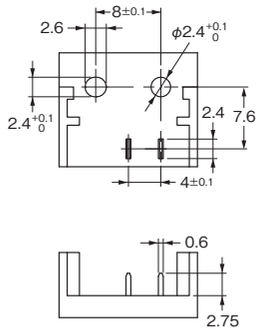

(Right angled)

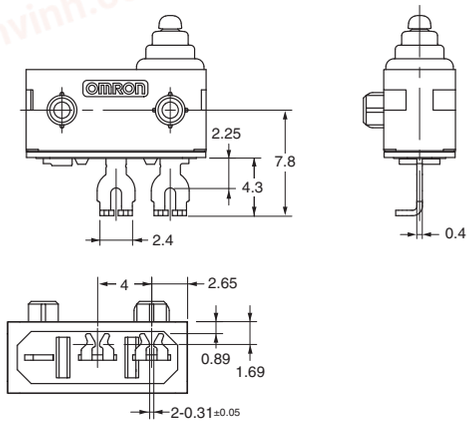

Insertion side unit mounting dimensions (for reference only)

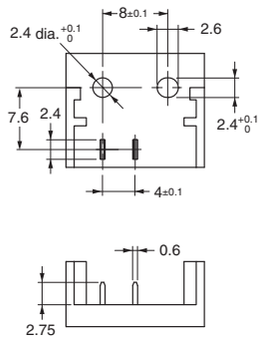

chanhvinh.com

D2AW-R Sealed Ultra Subminiature Basic Switch with Integrated Resistor

Dimensions (Unit: mm) / Operating Characteristics

The following illustrations and drawings are for solder terminal models. PCB terminal models are omitted from the drawings. Refer to *Terminals* for these terminals. When ordering, replace □ with the code for the rating that you need. For the combination of models, refer to *List of Models*.

● Pin plunger
D2AW-R□-□003□



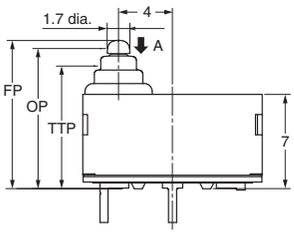

Operating characteristics	Type		Without posts	Models with posts
Operating Force	OF	Max.	1.0N {101 gf}	
Releasing Force	RF	Min.	0.1N {10 gf}	
Overtravel	OT		1.4 mm (reference value)	
Movement Differential	MD	Max.	0.25 mm	
Free Position	FP	Max.	11.2 mm	7.2 mm
Operating Position	OP		10.4 ± 0.3 mm	6.4 ± 0.3 mm
Total Travel Position	TTP	Max.	9.1 mm	5.1 mm

●Long straight leaf lever
D2AW-R□-□053□



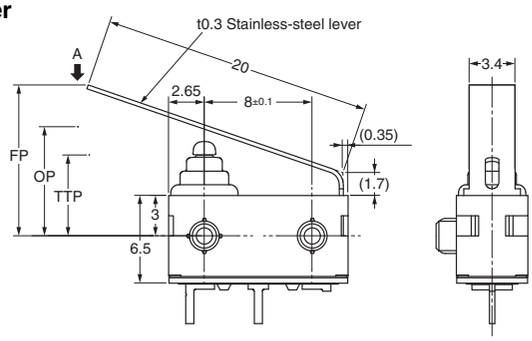

Operating characteristics	Type		Without posts	Models with posts
Operating Force	OF	Max.	1.5N {152 gf}	
Releasing Force	RF	Min.	0.1N {10 gf}	
Overtravel	OT		2.5 mm (reference value)	
Movement Differential	MD	Max.	0.7 mm	
Free Position	FP	Max.	15.9 mm	11.9 mm
Operating Position	OP		12.1 ± 0.8 mm	8.1 ± 0.8 mm
Total Travel Position	TTP	Max.	10.0 mm	6.0 mm

●Leaf lever
D2AW-R□-□063□



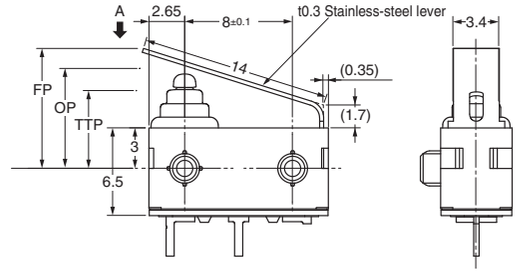

Operating characteristics	Type		Without posts	Models with posts
Operating Force	OF	Max.	2.0N {203 gf}	
Releasing Force	RF	Min.	0.2N {20 gf}	
Overtravel	OT		1.8 mm (reference value)	
Movement Differential	MD	Max.	0.5 mm	
Free Position	FP	Max.	13.3 mm	9.3 mm
Operating Position	OP		11.4 ± 0.5 mm	7.4 ± 0.5 mm
Total Travel Position	TTP	Max.	9.8 mm	5.8 mm

Note1. Unless otherwise specified, a tolerance of ±0.2 mm applies to all dimensions.
Note2. The operating characteristics are for operation in the A direction (⬇).

chanhvinh.com

Precautions

Please refer to "**Safety Precautions for All Detection Switches**" for correct use.

Cautions

●Degree of Protection

- Do not use this product underwater.
  Although molded lead wire models satisfy the test conditions for the standard given below, this test is to check the ingress of water into the switch enclosure after submerging the Switch in water for a given time. Satisfying this test condition does not mean that the Switch can be used underwater.
  JIS C0920:
  Degrees of protection provided by enclosures of electrical apparatus (IP Code)
  IEC 60529:
  Degrees of protection provided by enclosures (IP Code)
  Degree of protection: IP67
  (check water intrusion after immersion for 30 min. submerged 1m underwater)
- Do not operate the Switch when it is exposed to water spray, or when water drops adhere to the Switch surface, or during sudden temperature changes, otherwise water may intrude into the interior of the Switch due to a suction effect.
- Prevent the Switch from coming into contact with oil and chemicals.
  Otherwise, damage to or deterioration of Switch materials may result.
- Do not use the Switch in areas where it is exposed to silicon adhesives, oil, or grease. Otherwise faulty contact may result due to the generation of silicon oxide.

●Side-actuated (Cam/Dog) Operation

- When using a cam or dog to operate the Switch, factors such as the operating speed, operating frequency, push-button indentation, and material and shape of the cam or dog will affect the durability of the Switch. Confirm performance specifications under actual operating conditions before using the Switch in applications.

Correct Use

●Mounting

- Turn OFF the power supply before mounting or removing the Switch, wiring, or performing maintenance or inspection. Failure to do so may result in electric shock or burning.
- For models with posts, secure the posts by pressing into an attached device. Provide guides on the opposite ends of the posts to ensure that they do not fall out or rattle.
- When mounting a Press-fit terminals, press in A (body) and B (terminal) in the drawing below at the same time.
  If A (body) only is pressed in, the Press-fit terminals will be deformed and will not be properly inserted.
  Also, ensure that the Press-fit terminals is facing down when it is inserted.
  Avoid connecting soldered or laser-welded terminals.
  Avoid mounting in conditions exposed to corrosive gases, high temperature and humidity, and dust.

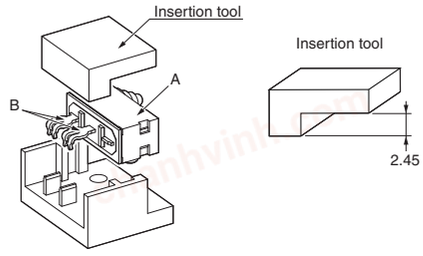

●Operating Body

- Use an operating body with low frictional resistance and of a shape that will not interfere with the sealing rubber, otherwise the plunger may be damaged or the sealing may deteriorate.

●ESD

- Static electricity adversely affects the chip resistor inside. For this reason, adopt sufficient electrostatic discharge measures when handling the Switch.
  Also, take sufficient consideration in the handling of the Switch and its packaging and transportation container.

●Handling

- Do not handle the Switch in a way that may cause damage to the sealing rubber.
- When handling the Switch, ensure that pressure is not applied to the posts in the directions shown in the following diagram. Also, ensure that uneven pressure or pressure in a direction other than the operating direction is not applied to the Actuator as shown in the following diagram. Otherwise, the post, Actuator, or Switch may be damaged, or the service life may be reduced.

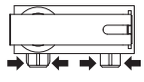

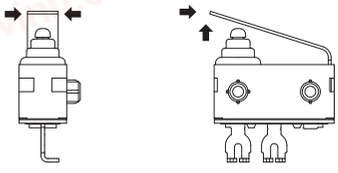

chanhvinh.com

Please check each region's Terms & Conditions by region website.

OMRON Corporation
Electronic and Mechanical Components Company

Regional Contact

Americas
https://www.components.omron.com/

Europe
http://components.omron.eu/

Asia-Pacific
https://ecb.omron.com.sg/

China
https://www.ecb.omron.com.cn/

Korea
https://www.omron-ecb.co.kr/

Japan
https://www.omron.co.jp/ecb/

© OMRON Corporation 2021 All Rights Reserved.
In the interest of product improvement, specifications are subject to change without notice.

Cat. No. B147-E1-01
0421